SERVICE MANUAL

(Magner 150)

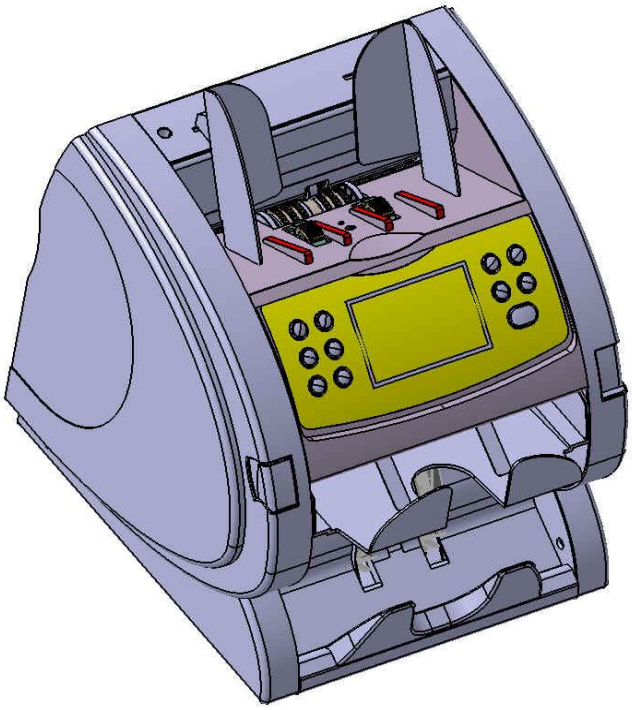

SEETECH

REV 3.0

Records of Revision			
Rev.	YYYY-MM-DD	Chief Contents	In Charge
Issued	2009-03-22	Revise Service Manual - Add safety rules for using machine. (Page 7) - Add Hardware records.(Page 55) - Add Hardware assembly&disassembly method for new parts. (Page 98~243) - Add new Setting Mode, CIS ENCODER SETTING. - Add Chapter 9. Troubles and 10. Others.	Kelly
01	2009-10-16	- Add CF LEVEL SETTING MENU for USD. (Page 299)	Kelly
02	2010-04-30	- According to the change of MG sensor, MG sensor recognition menu is added to CF calibration mode. (Page 267)	Kelly
03	2014-07-10	Add information about CDM Board -Assembley -Upgrade method	Kelly
04			
05			
06			
07			
08			
09			
10			
11			
12			
13			
14			
15			
16			
17			

Contents

PREFACE.....6
PRECAUTIONS.....6
FOR SAFETY USE.....7

CHAPTER 1. FEATURE
1-1. SUMMERY OF FUNCTIONS.....13
1-2. APPEARANCE.....14
1-3. PACKING LIST.....15

CHAPTER 2. SPECIFICATION
2-1. TECHNICAL SPECIFICATION.....16
2-2. ELECTRICAL CHARACTERISTICS.....17
2-3. THE ENVIRONMENT CONDITION.....17
2-4. CERTIFICATION.....18
2-5. PART SPECIFICATION.....18

CHAPTER 3. HARDWARE CONFIGURATION
3-1. THE CONSTRUCTION OF SENSORS.....19
3-2. DESCRIPTION OF DISPLAY.....20
3-3. HOW TO PLACE NOTES PROPERLY ON HOPPER.....21
3-4. DECRIPTION OF KEY.....22

CHAPTER 4. RS-232C PROTOCOL
4-1. Abstract.....23
4-2. System block diagram.....23
4-3. SERIAL INTERFACE SPECIFICATION.....23
4-4. Flow chart of software.....25
4-5. EXAMPLE SOFTWARE USING RS-232C PROTOCOL.....26
4-6.Descriptions of Key Pad.....28
4-7.Descriptions of COMMAND.....28

CHAPTER 5. OPERATION
5-1. SELF DIAGNOSIS.....29
5-2. BASIC MODE.....30
5-3. OPERATION MODE Ⅰ.....35
5-4. OPERATION MODE Ⅱ.....39

CHAPTER 6. SETTING MODE

6-1. SET THE SERIAL PRINTER.....45
6-2. DESCRIPTION OF SERIAL PRINTER MENU.....47
6-3. PRINT THE RECEIPT.....48
6-4. PRINT THE ERROR REPORT.....50
6-5. HOW TO SET THE USER SETTING MODE.....51
6-6. DESCRIPTION OF USER SETTING MODE.....52
6-7. DETAIL OF USER SETTING MODE.....54

CHAPTER 7. DISASSEMBLY & ASSEMBLY

7-0. HARDWARE CHANGE RECORDS.....55
7-1. MAIN BOARD DISASSEMBLY.....57
7-2. MOTOR BOARD DISASSEMBLY.....58
7-3. DETECTOR MODULE DISASSEMBLY.....59
7-4. DETECTOR MODULE DISASSEMBLY DRAWING.....60
7-5. CIS BOARD DISASSEMBLY.....62
7-6. CF BOARD DISASSEMBLY.....64
7-7. CF REAR & MR SENSOR DISASSEMBLY.....66
7-8. IR REAR SENSOR DISASSEMBLY (option).....69
7-9. CIS (Contact Image Sensor) DISASSEMBLY.....72
7-10. UPGRADE & EXTERNAL BOARD DISASSEMBLY.....73
7-11. DISPLAY BOARD DISASSEMBLY.....74
7-12. SMPS DISASSEMBLY.....76
7-13. MAIN MOTOR DISASSEMBLY.....77
7-14. SUB MOTOR DISASSEMBLY.....79
7-15. SOLENOID DISASSEMBLY.....81
7-16. KICKER ROLLER RUBBER DISASSEMBLY.....82
7-17. BITE ROLLER ASSEMBLY DISASSEMBLY.....84
7-18. SPLIT ROLLER ASSEMBLY DISASSEMBLY.....86
7-19. REJECT SENSOR DISASSEMBLY.....88
7-20. REJECT POCKET DISASSEMBLY.....90
7-21. STACKER SENSOR DISASSEMBLY.....91
7-22. REAL TIME BOARD ASSEMBLY (option).....93
7-23. IR BOARD & IR CONNECTOR BOARD DISASSEMBLY.....95
7-24. HOW TO ADD SPLIT GUIDE PLATE.....98
7-25. HOW TO IR PLATE.....102
7-26. HOW TO ADD SIDE MG SENSOR.....105
7-27. HOW TO REPLACE CF MAIN BOARD AND IR MAIN BOARD TO CF-IR MAIN BOARD.....199

7-28. HOW TO REPLACE CIS 1 MAIN BOARD TO CIS 2 MAIN BOARD.....227
7-29. HOW TO REPLACE CIS 1 MAIN BOARD TO CIS 2 MAIN BOARD WITH CF-IR MAIN BOARD 236
7-30. HOW TO REPLACE CIS 1/CIS 2/CIS 4 MAIN BOARD AND CF-IR MAIN BOARD TO CDM BOARD.....244
7-31. HOW TO REPLACE SORTING BELT.....257

CHAPTER 8. UPGRADE & CALIBRATION
8-1. UPGRADE INSTRUCTION(OLD) 260
8-2. UPGRADE INSTRUCTION(NEW) 269
8-2-1. UPGRADE OLD UPGRADE BOARD.....269
8-2-2. NEW UPGRADE INSTRUCTIONS.....275
8-3. SETTING INSTRUCTION.....282
8-3-1. MAIN BOARD SETTING.....282
8-3-2. CF BOARD SETTING 289
8-3-3. IR BOARD SETTING 305
8-3-4. CIS BOARD SETTING 311
8-4. DESCRIPTION OF TECHNICAL MENU 321
8-4-1. TECHNICAL SERVICE MENU 321
8-4-2. SUPERVISOR MENU.....326
8-4-3. CIS TEST MODE 329
8-4-4. CF LEVEL SETTING MODE 334

CHAPTER 9. TROUBLE
9-1. ERROR CODE 336
9-2. TROUBLE SHOOTING 341
9-3. ADJUST GAP.....386
9-4. DAILY MAINTENANCE.....397

CHAPTER 10. OTHERS
10-1. CF-IR VIEWER.....398
10-2. CIS IMAGE FACTORY 410
10-3. ACCESSORY 413

PREFACE

Thank you very much for adaoping the produce of SEETECH Co,. LTD.

This instruction manual describes the operation procedure and precautions in use.

Please use the product after reading this instruction manual and understanding the safety precautions, product's performance, operating procedure sufficiently. Also, please keep this manual at hant to confirm the contents even after reading it.

If this manual is lost or defaced and its contents cannot be confirmed, please request it from our distributors near you or designated dealers.

PRECAUTIONS

This product is developed for the purpose of counting and sorting paper currencies.

If the product is used for other purposes without our company's approval, or used after modifications by those other than our company or our company's designated traders, we will not bear any responsibility for arising damages or losses.

For installation and relocation of the product, please consult with our distributor near you or designated dealers.

◆ This product is manufactured for currency in circulation stipulated in the specification.
Please do not use this product for other purposes.

◆ This product is manufactured for the purpose of nomestic use inf the corresponding countries.
This cannot be used in other countires since power supply specifications and safety regulations are different.

◆ Please understand that the contents of this instruction manual may change without prior notice.

◆ Our company is always making effort to improve the products.
Accordingly, actual product may differ in some points from the description of this manual.

◆ We will not bear any responsibility for the damage or losses regarding the patent rights of third parties or other rights, arising from using the data contained in this instruction manual.

◆ We will not compensate any damage due to breakage, deterioration, theft, and criminal acts such as forgery, falsification, destruction etc.

◆ Unauthorized reprint of this instruction manual for profit is prohibited.

◆ Changes or modifications not expressly approved by SEETECH Co,. LTD, could void the user's authority to operate the equipment.

FOR SAFETY USE

Warning It denotes the contents in which mishandling of the product by neglecting this indication may cause the people's serious injury.

Caution It denotes the contents in which mishandling of the product by neglecting this indication may cause the people's light injury or only physical damage.

	This symbol indicates that the precautions for handling the product. Please read the indications well and utilize the product safely.	
	This symbol indicates prohibited matters not to do. Please read the indications well and never do the prohibitied matters.	
	This symbol denotes that there are indication matters which should be done without fail. Please read the indicated matters thoroughly and perform the matters without fail.	

Warning Installation

1. At installation and relocation of the products, please contact our distributor near you or our designated dealers. If installation is not perfect, there is a risk of a falling accident, electric shock, fire and burn injury.
2, At installation and use of the products, keep the space sufficient for opening and closing the door, cover and operation. If a part of the product touches a human body, it may cause an accident.
3. In case of installing the product at the following places, you should confirm the Road Law, Road Traffic Law and Fire Protection Law, etc. If compliance conditions are not clear, please consult with the authorities concerned.
 - The place which may disturb traffic or accident prevention.
 - The place adjacent to the fire extinguishing and detecting apparatus.
 - The place adjacent to the road signs or traffic signals.
 - The place where combustible materials or gas are treated (gas stations, etc.)
 Passages and facilities for evacuation Illegal installation may cause an accident.
4. Keep an installation space as described in the instruction manual, and do not choke up the ventilation inlet. If the ventilation inlet is choked, heat is accumulated inside and it may cause fire.
5. Depending on the installation place, mounting of an earth leakage breaker is required by Electricity Enterprises Law. Illegal installation may cause an accident.

1. Do not install the product at the place where water may spill on it. If water enters into the product, insulation performance degrades and it may cause fire and/or electric shock.
2. Do not install the product at the place where the floor cannot bear the load of the product, or at the unstable place with inclination and/or irregularity. It may cause the accidents of floor caving and sudden move of the product.
3. Installation at the following places should be avoided.
There are safety problems and deterioration of the product may be accelerated, which leads to a cause of failure.
- 1m or less from volatile combustible materials or curtains.
- 1m or less from heating apparatus such as stoves, heaters etc.
- The place brown by direct winds from air conditioners, ventilating openings etc.
- The place with high temperature, high humidity, or low temperature.
- The place with direct sunlight.
- The place with much dust.

When installing the product at the following places, please contact our distributor near you or our designated dealers.
- The place exposed to salty winds or corrosive gas.
- The place with much swinging or vibration.

Grounding work should be made for safety and prevention of static electricity and noise failure. In addition, a ground wire should be installed independently without sharing the wire with other products. At grounding work, please be sure to contact our distributor near you or our designated dealers. In case of electrical leakage when grounding is insufficient or not connected, it may cause fire and/or electric shock.
The place where a ground wire can be fitted:
- Ground terminals for power receptacle.
- The copper piece etc. with a length of 65 cm or more, buried in the ground.
- The ground terminals on which grounding work is made.

The place where is a ground wire must not be fitted.
- Gas pipes
- Telephone wires for exclusive use
- Lightning rods
- Water pipes or faucets with plastic materials at their intermediate part.

Do not use or put the combustible materials such as thinner, combustible gas, or a high-volatile object around/inside the product. Otherwise, it may cause explosion and/or fire due to heating from the product or flashing from power supply..

Warning

Power Supply

1. When using the product, connect it to the power supply specified in the instruction manual. If it is connected to the power supply, other than the product's specification, it may become a cause of fire, electric shock, and/or electrical leakage.
2. Do not use a power supply cord and the plug other than the attached ones. If a current that exceeds the rating flows in the power supply cord, it may cause fire.
3. Be sure to insert the blade part of the power supply plug into an outlet. Insufficient insertion may cause fire.

1. When the earth leakage breaker frequently operates, please contact our distributor near you or our designated dealers. If the product is used or left as it is, it may cause fire and/or electric shock.
2. Do not modify, process, or repair the power supply cord and the plug. In addition, do not convert a 3-prong power supply plug into a two-pole type. Grounding becomes insufficient and there may cause electric shock.

Please follow the items below to prevent electric shock and/or fire due to damage of the power supply cord.

- Do not pull the cord part when pulling out the power supply plug.
- Do not put anything on the cord part.
- Do not pass the cord near a source of heat.
- Do not bend or pinch the cord.
- Do not tread or twist the cord.
- Do not spill chemicals on the cord.
- Do not use it while it is bundled.
- Do not fix it with a stapler etc.

1. Do not use the power supply cord and the plug for other products or purposes. Further, when they are lost or damaged, please purchase them at our distributor near you or our designated dealers. The attached power supply cord and the plug are designed and confirmed the safety for connecting to this product to use. If they are used for other products or purposes, it may cause fire and/or electric shock.
2. The product should be used at the specified frequency. If it is used at other than the specified frequency, it may cause an accident.

Caution

Handling

1. The product should be used under the environment specified in the instruction manual. If it is used under the other environment of the specification, there may cause fie and electric shock.
2. When operating inside the product for error or clearing or cleaning etc., the operation should be made in accordance with the description in the instruction manual. Operation other than the description may cause an accident.

1. Do not turn off the power, pull out the power supply plug, or open the cover of the product during the operation. Otherwise, it may cause an accident.
2. Do not put a vase or glass with an object and/or water etc. on the product. Otherwise, it may cause fire, electric shock, and/or injury by spilling water or dropping.
3. Do not apply shock on the product. There is a risk of damaging the product and normal operation cannot be performed.
4. Do not use chemicals such as thinner or benzene when removing dirt of the product. Otherwise, it may cause damages.
5. Do not use a interface cable other than the attached one. When cables are other than the attachment, it may cause the interface error or machine trouble.

Do not us a combustible spray etc. around product. If spray gas etc. contacts the electrical parts inside the product, it may cause explosion and fire.

1. When touching inside the product for cleaning or parts replacement etc., be sure to turn off the power. If you work with turning the power on, it may cause electric shock and/or injury.
2. Do not touch the product and power supply plug and cord with a wet hand. There is a risk of electric shock.
3. The electrical parts inside the product should not get wet by rain or water at cleaning etc. if they get wet, it may cause electric shock and/or shock.
4. Do not turn of air heating suddenly when the product is completely cold. Moisture may adhere inside the product due to sudden air heating and it may cause electric shock.
5. There is a charging part inside. Be sure to open the cover with turning off the power. If the cover is opened without turning off the power, it may cause electric shock.

1. Do not drop any metallic piece such as a clip, staple etc. inside or in a clearance of the product. If a metallic piece drops inside the product and contacts the electric circuit, it may cause fire.
2. When the product is not use for a long time, be sure to pull out the power supply plug from an outlet for safety. Otherwise, it may cause heating and/or firing due to dust accumulation.

Do not modify the product or mount modified parts on the product. Further, do not dismount the portion which is not indicated to be opened/closed in the manual, or the cover and parts etc. fixed with screws etc. Otherwise, it may cause fire, electric shock, and/or injury.

1. Do not approach your hand or cloths during operation to moving parts of the product reachable. There may cause injury and/or pinching of a finger.
2. When closing a door, pay attention not to pinch a finger. It may cause of injury.
3. When working with a door opened, confirm it is locked. It may become a cause of injury because the door may suddenly close.

Do not touch the gear etc. It may cause injury.

Warning

Maintenance

1. For repairing the product, please contact our distributor near you or our designated dealers. Insufficient repair may cause fire, electric shock, and/or injury.
2. When the product has sunk under the water due to a disaster etc., stop using it and please ask for repair/check to our distributor near you or our designated dealers. If used as it is, it may cause fire and/or electric shock.
3. Check periodically whether its installation place is unstable or not. If there is any abnormality, please contact our distributor near you or our designated dealers. If it is continuously used with insufficient installation, it may cause a falling accident.
4. Check and clean the power supply plug and the cord regularly. It the power supply plug is broken or the cord is damaged, stop using and please replace it by contacting our distributor near you or our designated dealers. It may cause fire and/or electric shock.

When smoke, abnormal smell, or abnormal sound is generated from the product, stop using it immediately, cut off power supply and pull out the plug from the outlet. Then, please contact our distributor near you or our designated dealers. It used or left as it is, it may cause fire and/or electric shock.

CHAPTER 1. FEATURE

1-1. SUMMERY OF FUNCTIONS

- Currency discrimination counter with image processing technology

This machine uses advanced image processing technology, so i - Hunter can discriminate banknote currency more accurately and precisely. i - Hunter has 4 types of discrimination mode as following.
- Mixed mode : identifies mixed denomination bills quickly and provides total value and piece count
- Single mode : counts a specific denomination and classifies all others to the reject pocket
- Separation mode : recognizes the first banknote and separates different denominations to the reject pocket
- Direction mode : processes all the notes “ faced and oriented ” and rejects all others

- Excellent Counterfeit Detection

i-Hunter carries high levels of counterfeit detection with UV, FL, IR and Superior Magnetic Detection system. Most suspect notes will not escape this advanced detection technology.

- Non-stop throughout

Machine' s feed mechanism ensures non-stop throughout for variety of functions.
- identifies mixed denomination bills quickly and provides total value and piece count.
- counts a specific denomination and classifies all others to the reject pocket.
- recognizes the first banknote and separates different denominations to the reject pocket.
- processes all the notes “ faced and oriented ” and rejects all others .

- Large Easy-to-read LCD Display

Easy-to-read LCD display shows variety information at the same time and provides convenient graphic user interfaces

- Other Features

- Low noise
- Easy software upgrade
- Easy maintenance
- Desktop type
- Graceful design
- Clear note path with Easy access

1-2. APPEARANCE

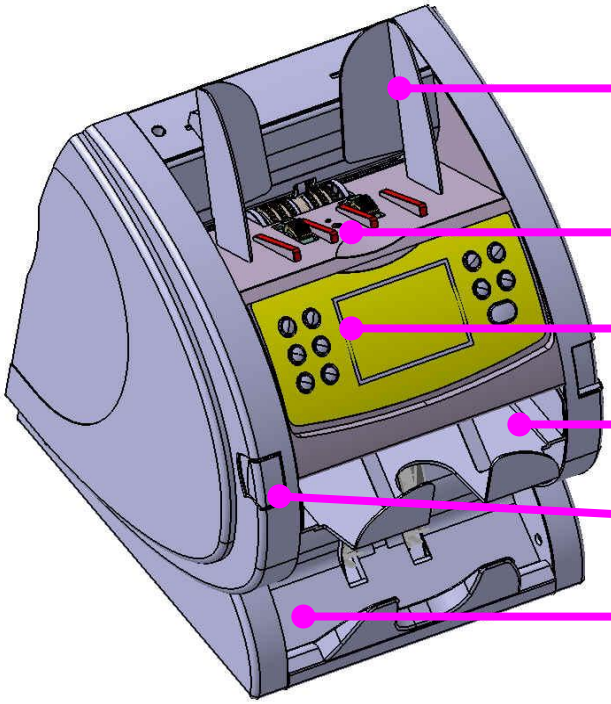

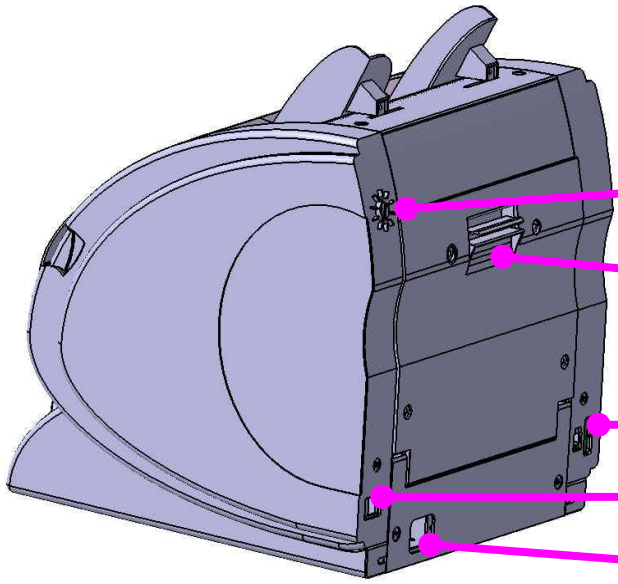

1-3. PACKING LIST

♣ BASIC

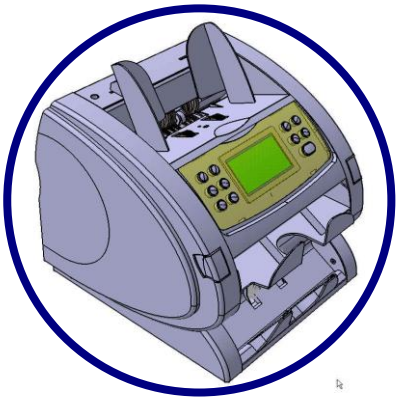

Machine

User Manual

Power Cable

♣ OPTIONS

RS232C cable

Serial Print cable

External Display

CHAPTER 2. SPECIFICATION

2-1. TECHNICAL SPECIFICATION

Available currencies	EURO, USD, LOCAL (OPTION)			
Dimension(mm)	330(W)X350(D)X370(H)	Display		4.1inch Graphic LCD
Weight	Approx. 16Kg	Denomination Detection		Full Line Image Sensor
Countable Notes Size	60X90mm~100X180mm	Counterfeit Detection		UV,FL,MG,IR
Countable Note Thickness	0.08~0.12mm	Speed	Denomination count	1000notes/min
Hopper Capacity	300notes(circulated notes)		Piece count	Max.1500notes/min
Pockets	1pocket and 1reject	Feed System		Roller friction system
Main Pocket Capacity	200notes(circulated notes)	Power supply		100~240V AC, 50/60Hz
Reject Pocket Capacity	Max.90notes (circulated notes)	Power consumption		Max.110 Watts

♣ OPTIONS

Local Currency	Max.2 currency	IR Detection	Full Line IR Sensor
External Display	LCD type for customer	Bill Printout	With RS232C Interface for PC and external printer, Print user name
Serial Number Recognition	Max.400notes/min		
Serial Number Manager Software	For saving and converting OCR the serial number in PC	Upgrade Kit	For upgrade the machine
Discriminational Function	Discriminate between old and new	Real Time Clock	For Local time printout

2-2. ELECTRICAL CHARACTERISTICS

♣ Ratings : AC 100~240V, 50/60Hz

fuse #	Irated (A)	U (V)	P (W)	I (mA)	Ifuse (mA)	condition/status
F1	-	180	91,8	0,51	0,51	Maximum normal operation/50 Hz
F1	0,8	200	78,0	0,39	0,39	
F1	0,8	240	81,6	0,34	0,34	
F1	-	254	94,0	0,37	0,37	
F1	-	90	80,1	0,89	0,89	Maximum normal operation/60 Hz
F1	1,6	100	81,0	0,81	0,81	
F1	1,6	120	80,4	0,67	0,67	
F1	-	127	81,3	0,64	0,64	
F1	0,8	200	38,0	0,19	0,19	Stand-by mode / 50 Hz
F1	0,8	240	38,4	0,16	0,16	
F1	1,6	100	31,0	0,31	0,31	Stand-by mode / 60 Hz
F1	1,6	120	34,8	0,29	0,29	

2-3. THE ENVIRONMENT CONDITION

The machine will run its best when stored and operated in an environment that meets the following temperature and humidity conditions.

Operating temperature	5℃ to 40℃
Storage temperature	-15℃ to 60℃
Shipping temperature	-40℃ to 70℃
Relative Humidity	Operating : 30 to 70% RH (non-condensing) Storage : 20 to 85% RH (non-condensing) Shipping : 5 to 90% RH (non-condensing)

2-4. CERTIFICATION

Europe	CE marking, TÜV/GS:EN60950-1 ; 2001
National	CB-scheme : IEC 60950-1 ; 2001
China	CCC : GB9254-1998(2005020912000155)
Australia	Safety

2-5. PART SPECIFICATION

SMPS(DHI110-B7H)

Input specification

Rated input voltage: 85 to 264VAC
Frequency: 47 to 63 Hz
Rated input current: 2.4A (85VAC)
1.2A (170VAC)

Output specification

Output voltage: 24 V, 5V, 7VDC
Rated output current: 3.0 A (24V, 7VDC)
0.3~3.0 A (5VDC)
Rated output power: 60W

Dimensions and weight

Dimensions: 187X120X43(mm)

DC MOTOR (HMP-4468-097A)

Performance Data

Input voltage: DC 24V

No Load
Speed: 4300R.P.M
Current: 0.2A

At Maximum Efficiency
Speed: 3610R.P.M
Current: 1.05A
Output: 15.4W

Life: 2000H
Weight: 360g

SWING SELECTOR (KHA38H01A)

Specification

Swing angle: 20°
Change position: 10°
Input voltage: DC 24V
Wire woung resistance (at 20°C): 20Ω
Non electrification retention torque:
215×10^{-4}N·m
Swing operation time: 10.5ms
Insulated class: E class
Weight: 65g

CHAPTER 3. HARDWARE CONFIGURATION

3-1. THE CONSTRUCTION OF SENSORS

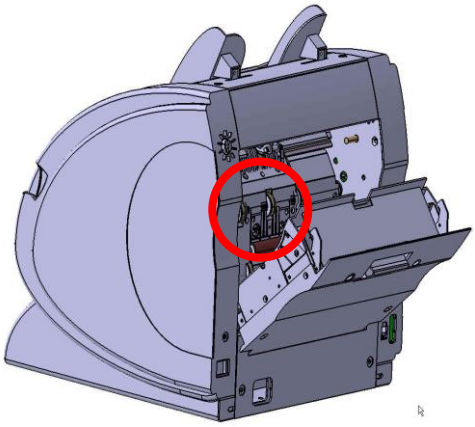

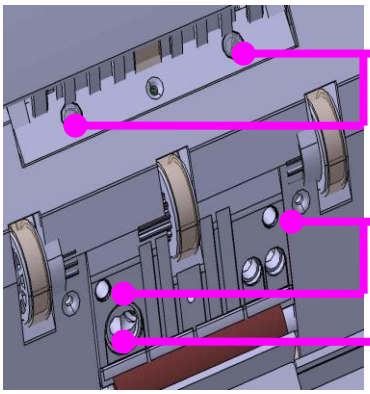

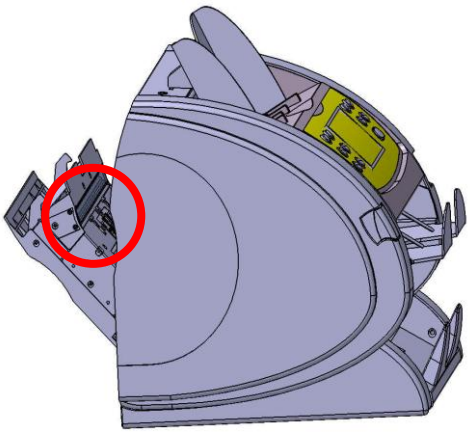

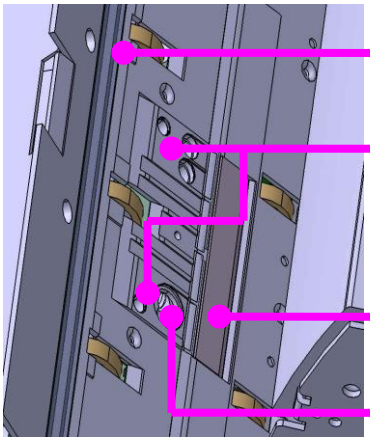

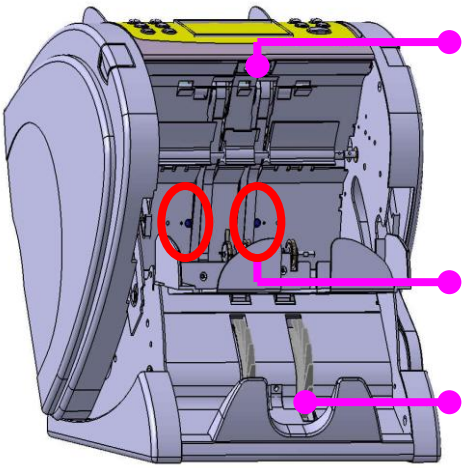

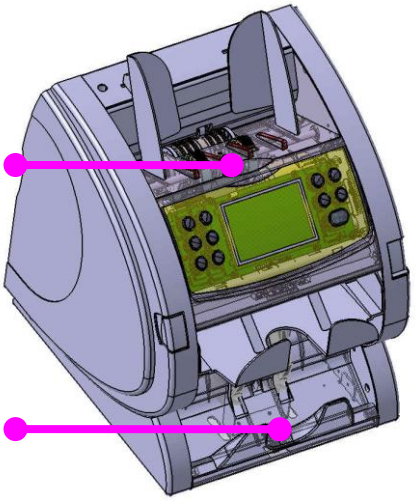

3-2. DESCRIPTION OF DISPLAY

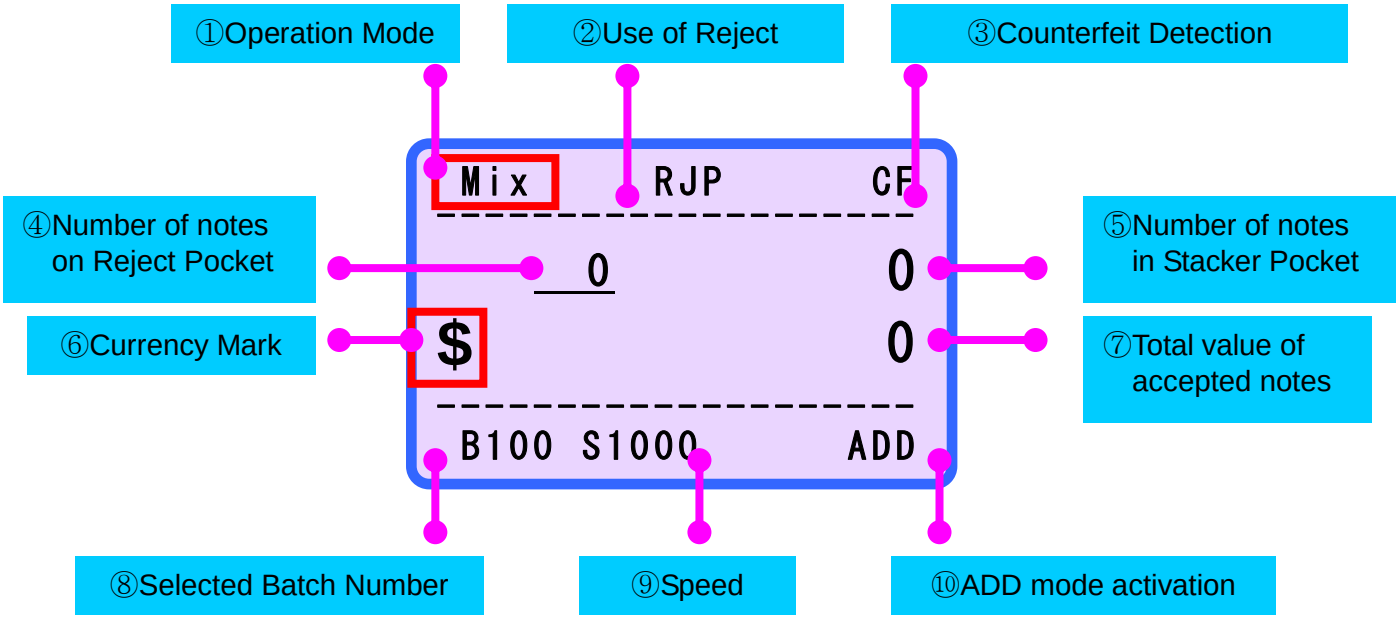

① Operation Mode : Display the current operation mode

② Use of Reject : Whether or not use of Reject Pocket

③ Counterfeit Detection : Whether or not use of counterfeit detection

④ Number of notes on Reject Pocket :

⑤ Number of notes in Stacker Pocket :

⑥ Currency Mark : Display the current currency

⑦ Total value of accepted notes : Total value of the Stacker Pocket

⑧ Selected Batch Number : Display the current batch number

⑨ Speed : Display the current speed

⑩ ADD mode activation : Whether or not use of ADD function

3-3. How to place notes properly on Hopper

Before count the notes, user is recommended to adjust the hopper guide.
If you not adjust the hopper guide, the machine does not work properly.

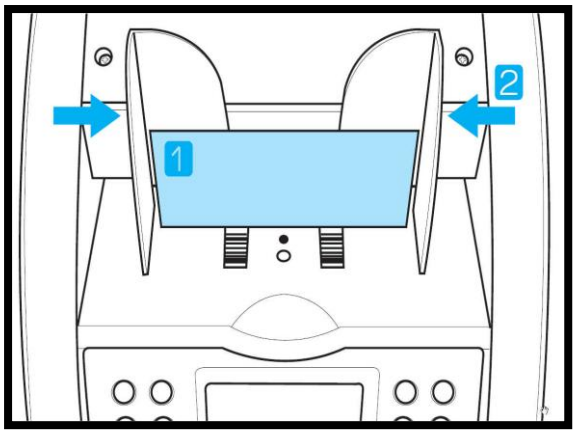

1. Place a note on the HOPPER referring to following figure.

2. Move the HOPPER guide to make the guide size is the same with the note size.

3. If you use to USD or EURO, refer to symbol of Hopper sticker.

3-4. DECRIPTION OF KEY

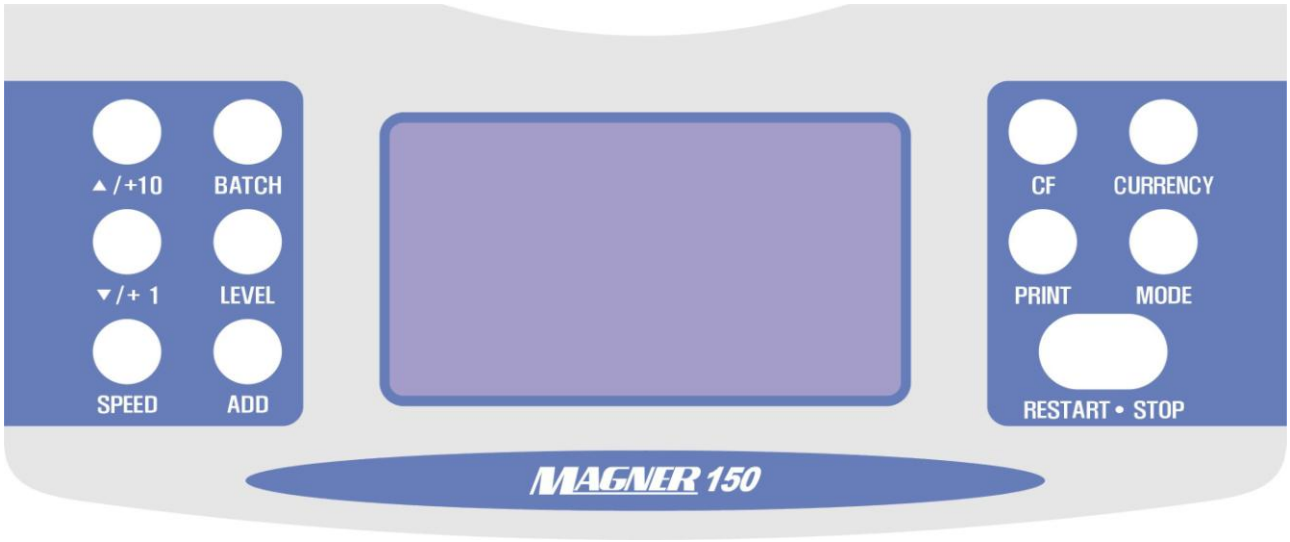

KEY	DESCRIPTION
▲/+10	Use of increasing in normal. To enter User Setting Mode and Serial Print Mode. (When pressing and holding down the key)
BATCH	Batch function key. This is consists of 6 batch value. If you change the value, enter the User Setting Mode.
▼/+1	Use of decreasing in normal. To enter Technical service menu. (When pressing and holding down the key)
LEVEL	Change the DDL value in count mode. Using this key, you can adjust the DDL value.
SPEED	Change the count speed for count mode. After pressing this key, you can adjust the speed by pressing +10 of +1 key.
ADD	When pressing and holding down the key, you can enter the cumulate mode.
CF	Counterfeit detection active or deactivate function.
CURRENCY	Choice of currency. To enter CIS TEST MODE. (When pressing and holding down the key)
PRINT	After counting, when pressing and holding down the key, shows the denomination information. In serial mode, press it, denomination prints out printer or LCD Display.
MODE	Choose of operation mode.
RESTART /STOP	Quit the mode menu and clear count value information in the Display.

CHAPTER 4. RS-232C PROTOCOL

4-1. Abstract

This specification defines interface specification between Machine and computer or Controller with RS-232 port.

4-2. System Block Diagram

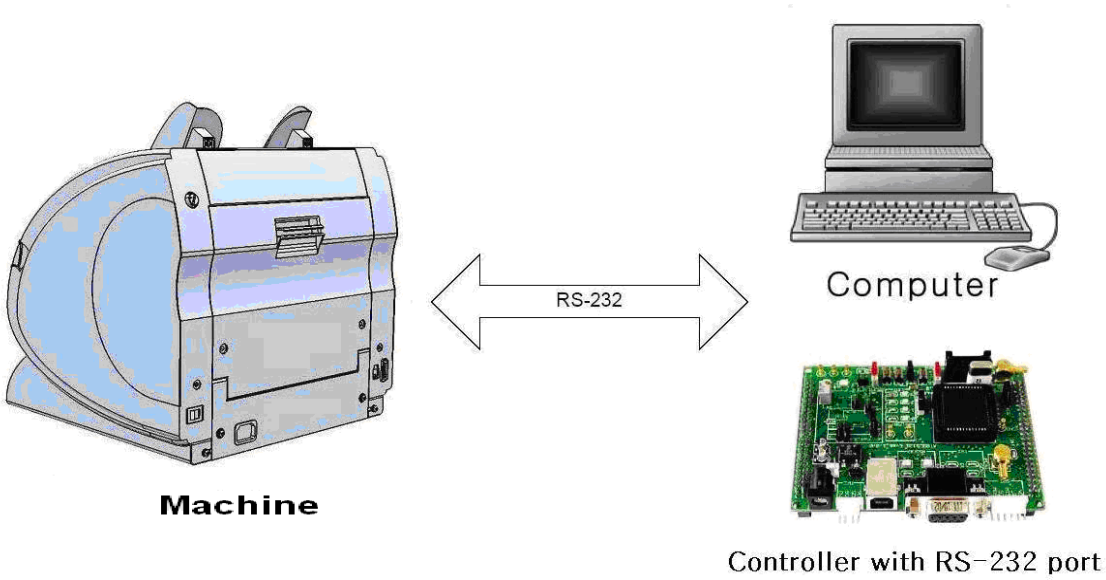

4-3. Serial Interface Specification

1) Description of Serial Port for RS-232 PORT

- ☑ Emulation MODE : SEETECH RS-232 Protocol (This protocol only supply by from SEETECH)
- ☑ Baud Rate : 2,400 bps ~ 115,200 bps (115,200 bps is a Default Value of Factory.)
- ☑ Data Bits : 8 bits
- ☑ Stop Bits : 1 bit
- ☑ Handshaking : DTR/DSR
- ☑ Parity Check : Disable

2) Connector D-SUB 15 to D-SUB-9 (HARNESS)

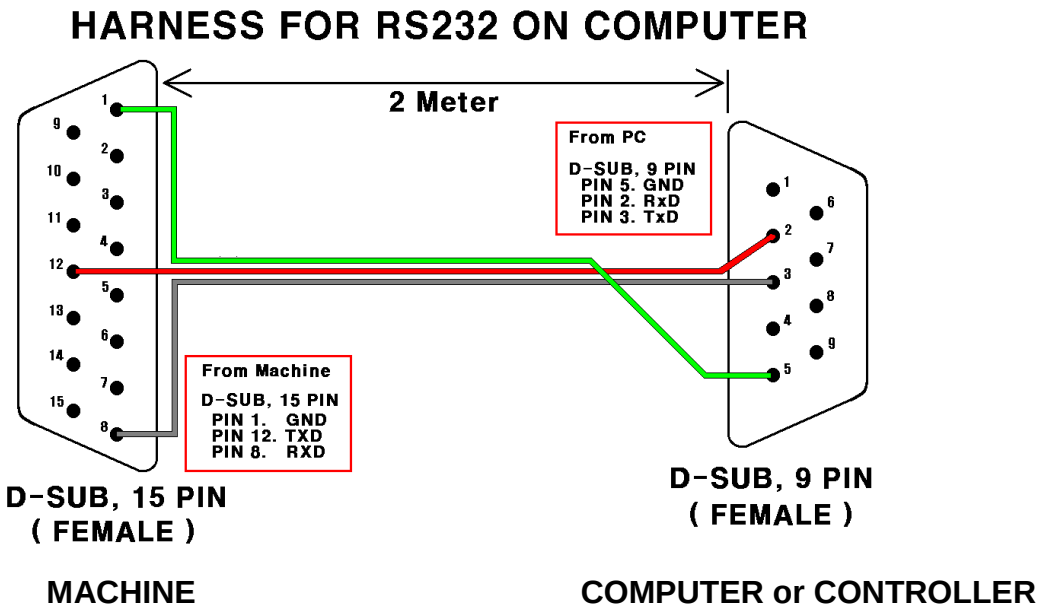

3) Interface signal – D-SUB 15 PIN (Female)

Pin No.	Signal Name	Signal Direction	Contents
1	GROUND		Signal Ground
2 ~ 7			None
8	RXD	Input	Receive Data
9 ~ 11			None
12	TXD	Output	Transmit Data
13 ~ 15			None

4) Interface signal – D-SUB 9 PIN (Female)

Pin No.	Signal Name	Signal Direction	Contents
1			None
2	RXD	Input	Receive Data
3	TXD	Output	Transmit Data
4			None
5	GROUND		Signal Ground
6 ~ 9			None

4-4. FLOW CHART OF SOFTWARE

1) Machine

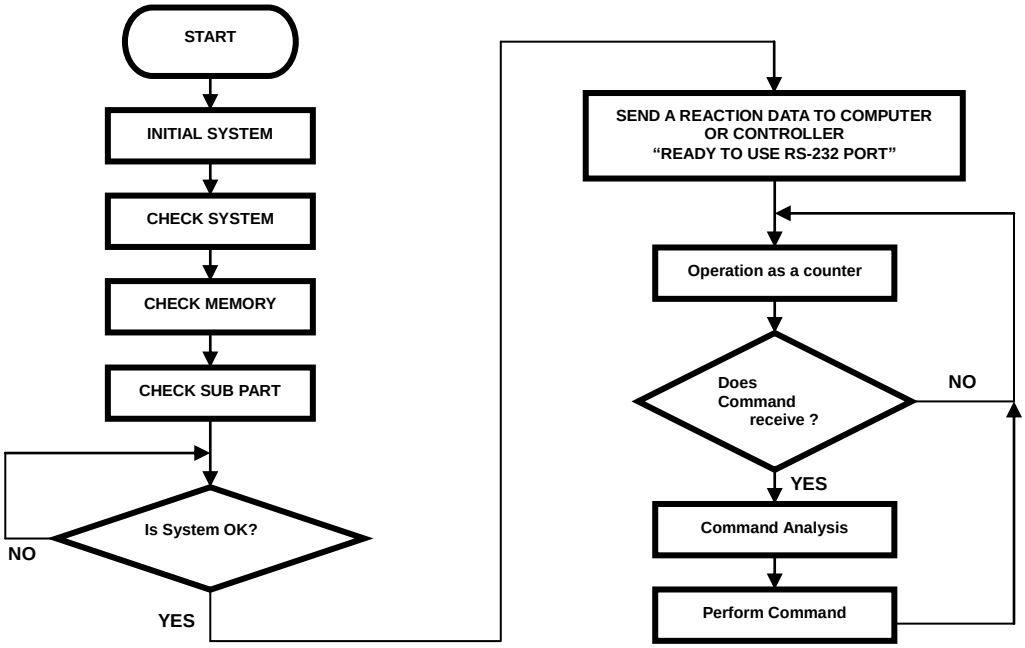

2) COMPUTER / CONTROLLER WITH RS-232 PORT

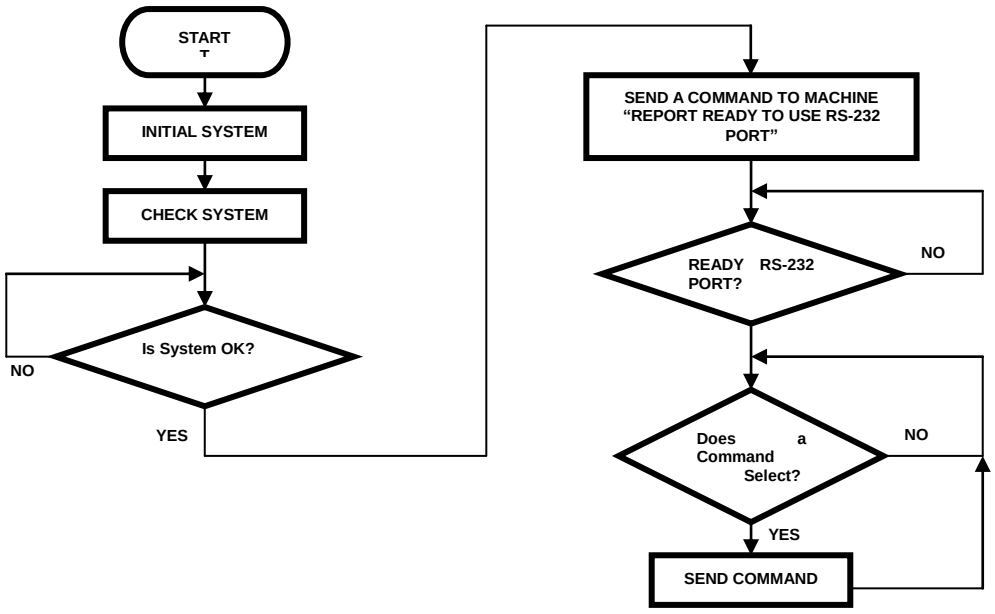

4-5. Example software using RS-232C protocol

Show to execute “the Cyber Operator”

(1) Connect Machine to PC.

(2) Execute the cyberOperator.exe file.

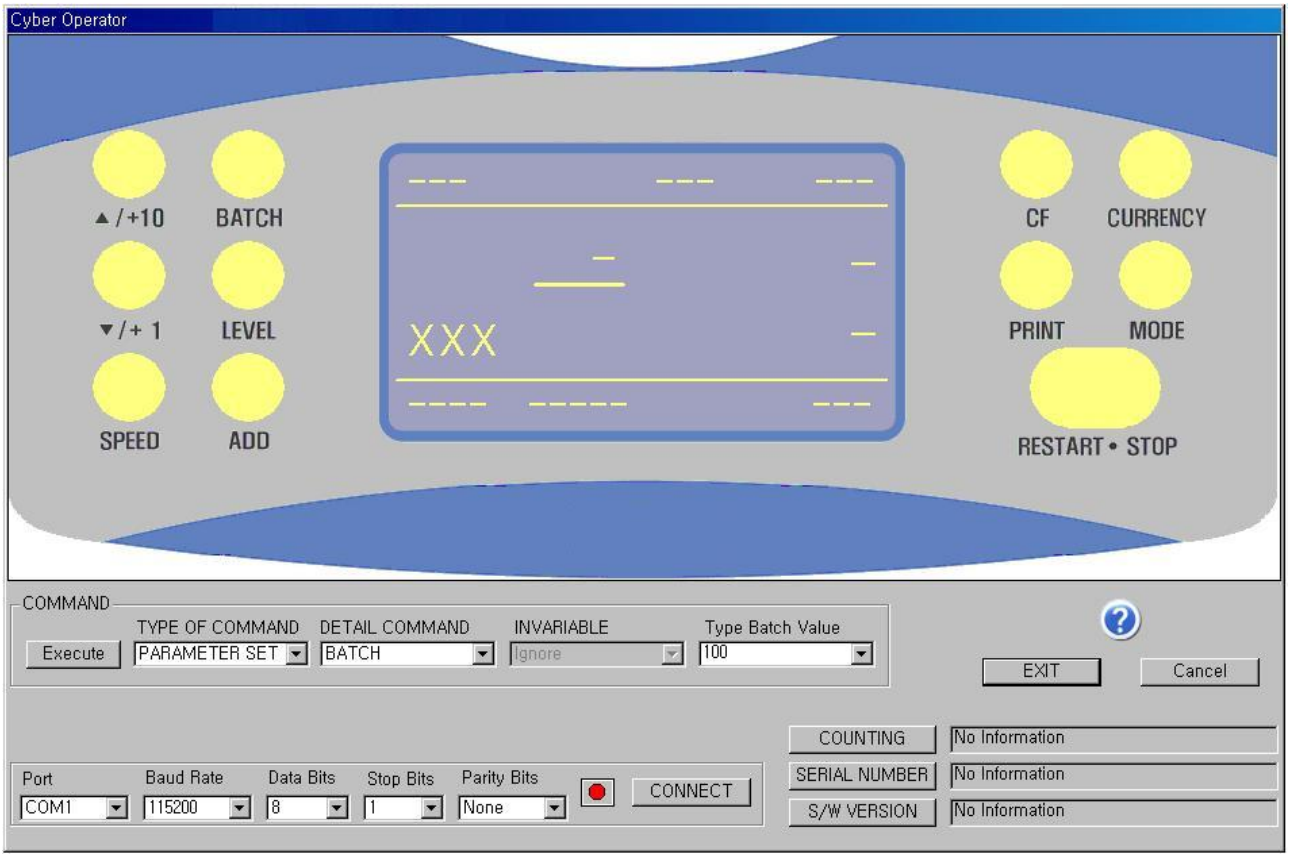

(3) Choose the communication ports and baud rate.

Baud rate is the same as Machine’s baud rate.
And don’t change the blue box parameters.

(4) Click the connect icon then red light changes to green.

(5) Display shows as below.

This is the same key pad as Machine. If you click the CF icon, CF function is activated to the machine.

4-6.Descriptions of Key Pad

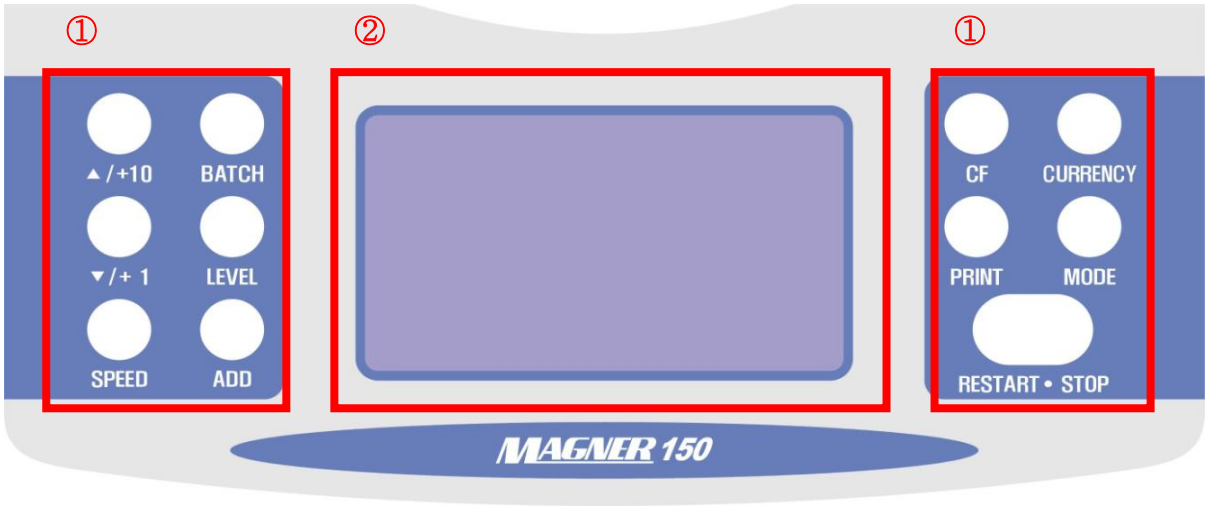

① If you click the CURRENCY key with , the machine will react and display on the screen.

② If you click the ADD key with 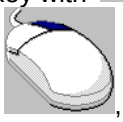 , the machine will react and display on the screen.

- Press the Key.

- Press and Hold down the Key

4-7.Descriptions of COMMAND

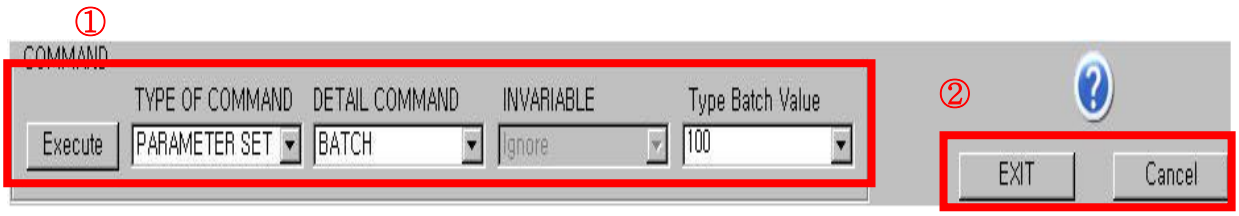

① If you want to change the batch value, it is possible at this COMMAND.
First, select COMMAND-TYPE is **BATCH**.
Second, **type COMMAND-VALUE you wanted**.
Third, click Execute icon.

② If you want to quit this function, click **Exit**.

CHAPTER 5. OPERATION

5-1. SELF DIAGNOSIS

Plug the power cable into the machine.

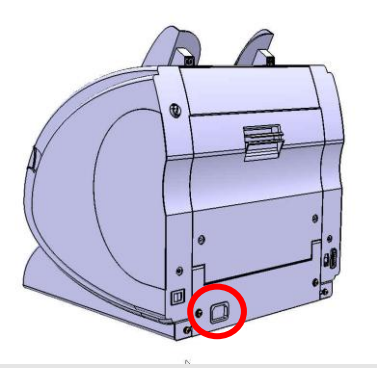

Turn on the power switch.

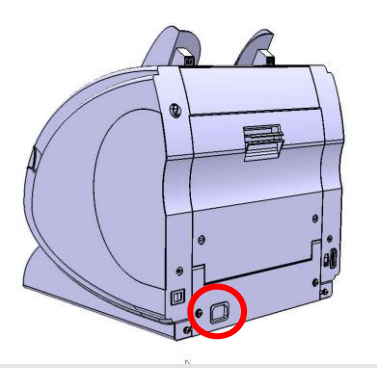

The message below will display on the LCD for 1sec during self-diagnosis.

```
MAGNER150
  MAGNER150 SERIES
  CF FUNCTION : YES
  SERIAL NUMBER : YES
  LOCAL CURRENCY : YES
S/W ver: Vxx.x 2006-xx-xx
```

☑ The active states of all the function will be shown in the display.

The machine shows below message on the LCD DISPLAY for a short time during checking the Memory.

```
Checking EEPROM Data .... OK
 Checking Setting Data
    HSRB Sensors ......... OK
 Checking Count Sensors
    Cis Up ............... OK
    Main ................. OK
    Reject ............... OK
 Motor Speed Data
    Main Motor ........... OK
    Sub Motor ............ OK
```

☑ If there is anything wrong, the message "Check above!!! Press the RESTART" will be blinking on the display.

The machine will show this message below on the DISPLAY for a short time during checking the Sub Modules.

```
CIS Part Checking
   C Channel ............ OK
   Self Test ............ OK
CF Part Checking
   C Channel ............ OK
   Self Test ............ OK
```

☑ If there is anything wrong, the message "Check above!!! Press the RESTART" will be blinking on the display.

After all checking is finished, the machine shows as below.

```
Mix          RJP          CF
- - - -  - - - - - - - - - - -
        0                 0
$                         0
- - - - - - - - - - - - - - -
B100  S1000              - - -
```

☑ It is possible that the actual machine's Display in the manual are little different.

5-2. BASIC MODE

1. COUNT MODE

Press **CURRENCY** key and select **COUNT** mode.

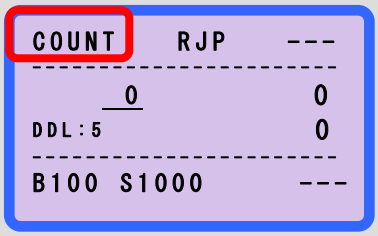

COUNT mode is for counting all other currencies (without detection)

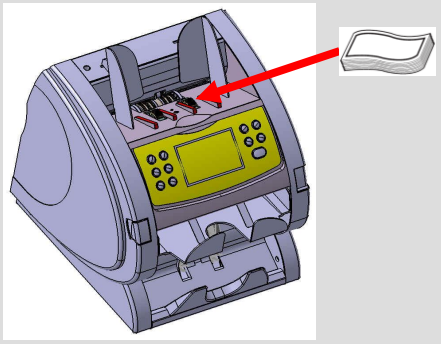

When you place the notes on the Hopper, the machine starts running.

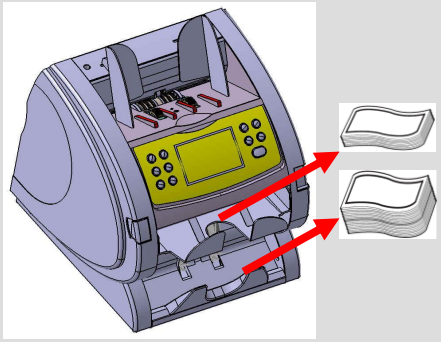

Counted notes are stacked in the Stacker Pocket and the trouble notes are stacked in the Reject Pocket.

▶ If you remove the rejected notes when counting, it is possible that displayed rejected counts differ from number of notes in the Reject Pocket.

▶ If you show the error message when the error ocurrs during counting, Press and hold down the **MODE** key.

▶ Please refer to **APPENDIX** when the error ocurrs during counting.

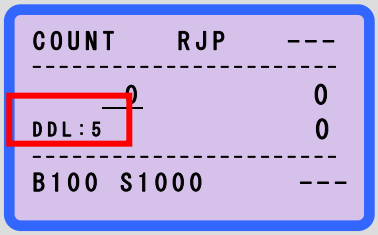

DDL means Double Detection Level.
User can select the level and the range is 1 to 9.

- DDL 1: Euro, USD.
- DDL 2~8: Local currency
- DDL 9: If the notes are darker than EURO or USD or the notes are so old, user can select this level to detection double notes. But when counts normal notes in this level, the machine do not detect the double notes. Please take care.

If you want to change the DDL, press the **LEVEL** key and select level.

When you save the DDL value, press and hold down the **LEVEL** key.

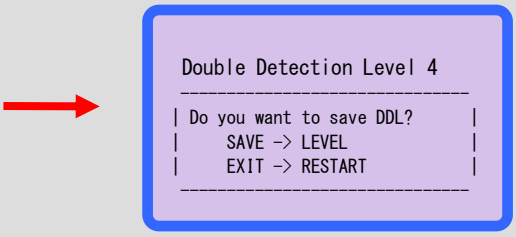

If you press the **LEVEL** key, DDL value save and go to the **COUNT** mode.

2. EURO MODE

Press **CURRENCY** key and select **Euro**.

Press **MODE** key and select operation mode, you want.

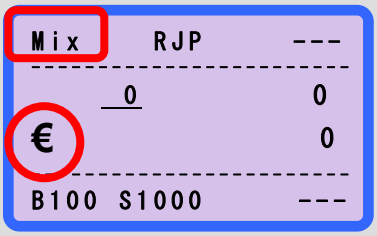

It is possible that the machine denominates Euro.

▶ If you remove the rejected notes when counting, it is possible that displayed rejected counts differ from number of notes in the Reject Pocket.

▶ When you press other function keys in the basic or operation mode,for example CF key, ADD key, etc.,the machine performs these tasks at the same time.

▶ If you want to show the error message when the error ocurrs during counting, Press and hold down the **MODE** key.

▶ Please refer to **APPENDIX** when the error ocurrs during counting.

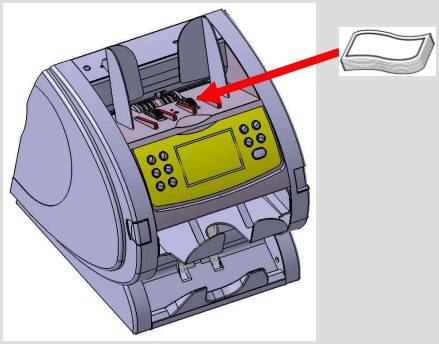

When you place the notes on the Hopper, the machine starts running.

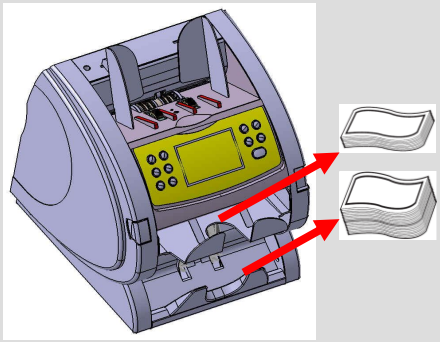

Counted notes are stacked in the Stacker Pocket and the trouble notes are stacked in the Reject Pocket.

3. USD MODE

Press **CURRENCY** key and select **USD**.

Press **MODE** key and select operation mode, you want.

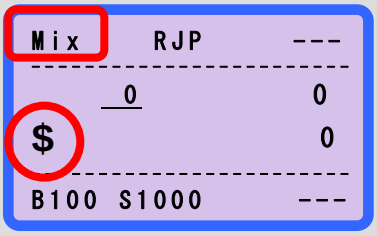

It is possible that the machine denominates USD.

▶ If you remove the rejected notes when counting, it is possible that displayed rejected counts differ from number of notes in the Reject Pocket.

▶ When you press other function keys in the basic or operation mode,for example CF key, ADD key, etc.,the machine performs these tasks at the same time.

▶ If you want to show the error message when the error ocurrs during counting, Press and hold down the **MODE** key.

▶ Please refer to **APPENDIX** when the error ocurrs during counting.

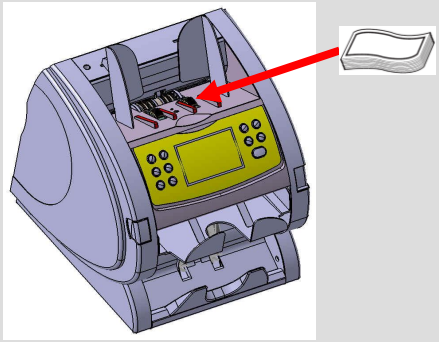

When you place the notes on the Hopper, the machine starts running.

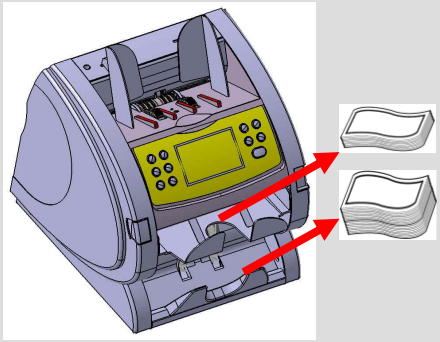

Counted notes are stacked in the Stacker Pocket and the trouble notes are stacked in the Reject Pocket.

4. LOCAL CURRENCIES MODE

Press **CURRENCY** key and select currency, you want.

Press **MODE** key and select operation mode, you want.

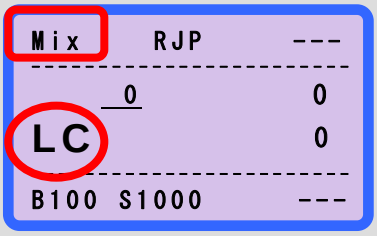

Type of selected local currency will be displayed, LC is ₩, ¥, **ZAR, AUD, SYP,** yTL and etc.

▶ If you remove the rejected notes when counting, it is possible that displayed rejected counts differ from number of notes in the Reject Pocket.

▶ When you press other function keys in the basic or operation mode,for example CF key, ADD key, etc.,the machine performs these tasks at the same time.

▶ If you want to show the error message when the error ocurrs during counting, Press and hold down the **MODE** key.

▶ Please refer to **APPENDIX** when the error ocurrs during counting.

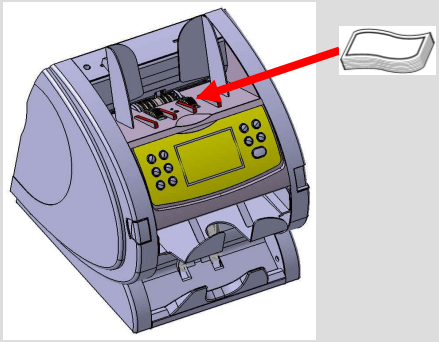

When you place the notes on the Hopper, the machine starts running.

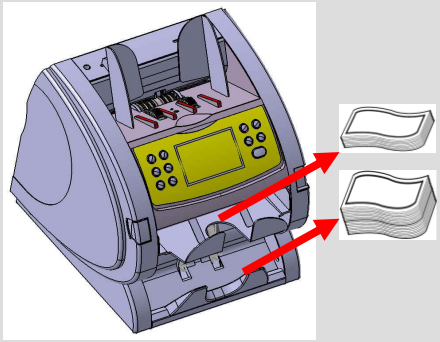

Counted notes are stacked in the Stacker Pocket and the trouble notes are stacked in the Reject Pocket.

5-3. OPERATION MODE Ⅰ

1. BATCH MODE

If you want to active Batch function,
press **BATCH** key.
But Display has no change.

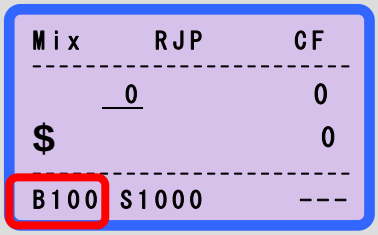

After activating Batch function, if you press **BATCH** key again, you can select Batch Number.
Batch Number is changed continuously when you press BATCH key. (B100 -> B50 -> B25 -> B20 -> B10 -> B100)
If you press **BATCH** key again, you can select Batch Number ▲/+10 key or ▼/+1 key.
▲/+10 key is increase ten unit and ▼/+1 key is increase one unit.

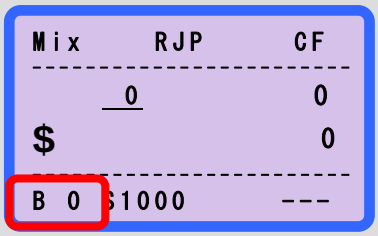

If you press and hold **BATCH** key, Batch function is inactive and Batch Number becomes zero.
But, the value of Batch is not saving. The default value is 100.

If you want **Batch Adjusting**, refer to
7.PRE-BATCH PCS.SETTING of **USER SETTING MODE**.

2. CF MODE

If you want to detect the counterfeit,
press **CF** key before counting.

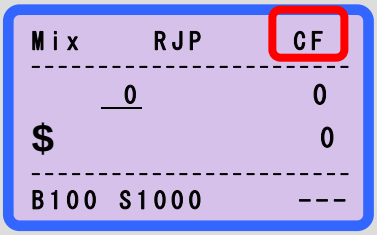

▶CF function is performed with other mode, except Counting Mode and Serial Number Print Mode, at the same time.
▶If CF key is not operation, check the supervisor menu.2.CF function.
Refer to 9-3. DESCRIPTION OF TECHNICAL MENU.

3. CUMULATE MODE

CURRENCY

Press **CURRENCY** key and select currency, you want.

MODE

Press **MODE** key and select operation mode, you want.

ADD

Press and hold down **ADD** key.

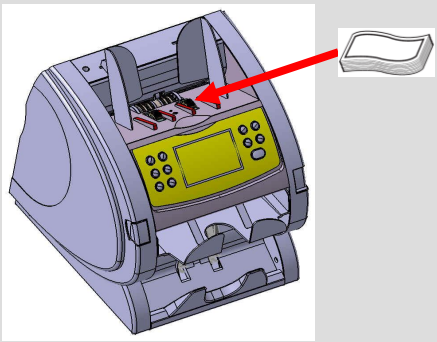

When you place the notes on the Hopper, the machine starts running.

When notes are removed from the Stacker Pocket

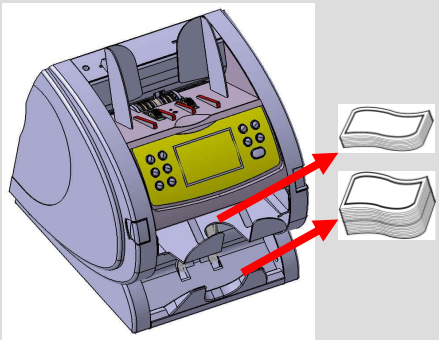

When count the notes again

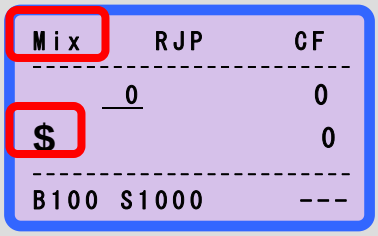

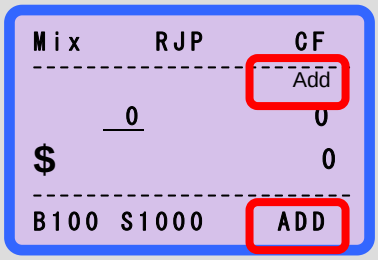

In this mode, the machine cumulates the sum of counted notes.

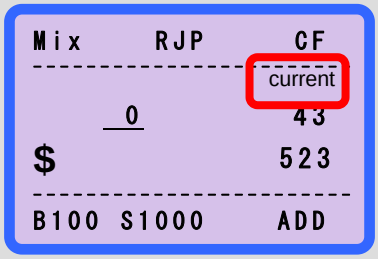

When count the notes, the Display shows current information.

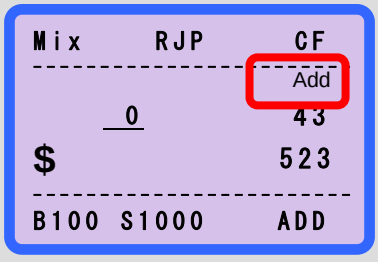

Display shows added information between current and previous counted notes.

When count the notes again

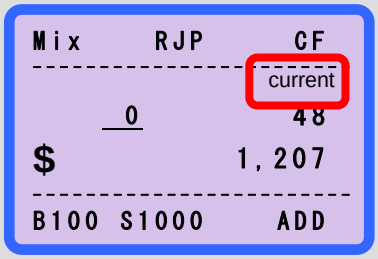

Display shows current counted information.

When notes are removed from the Stacker Pocket again

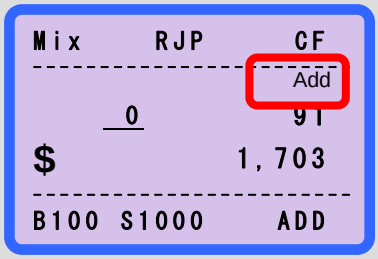

Display shows added information between current and previous counted notes.

If you want to see a report on Display, press and hold down **PRINT** key.
Display shows added value information.

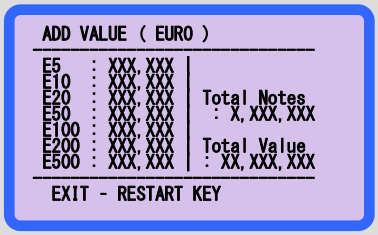

If you want to print out a receipt, press **PRINT** key.
Display shows the message as below, during the printing out.

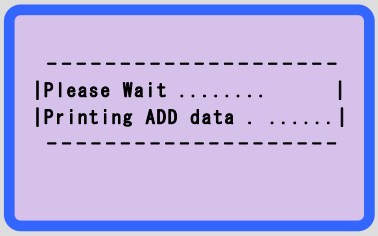

If you want to know more detail of serial printer, refer to **CHAPER 5.**

Verify function

During counting in ADD mode, use can verify counting result which already counted after activating ADD function or new bundle of note which is independent with ADD counting result.
For example, after activate ADD function, use counts 1200 notes. But he wants to count again some notes which were already counted or count new bundle. In this case, if press ADD Key shortly, verify function is activated. When verify function is turned on, use can count new notes which is no relation with 1200 notes. After completes verifying counts, if press ADD Key shortly again, machine returns to previous.

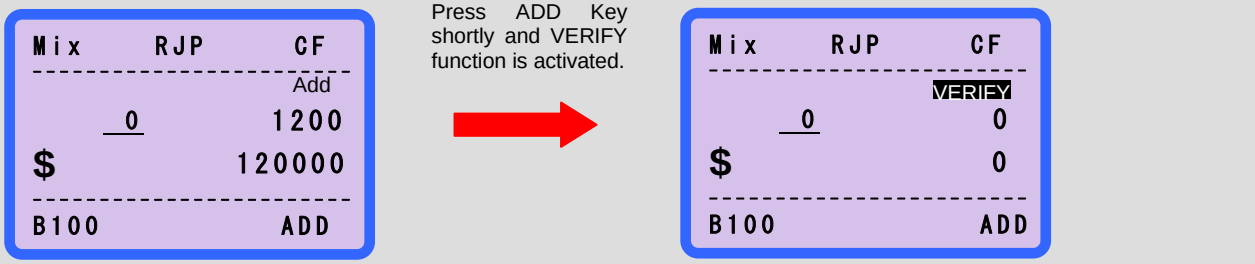

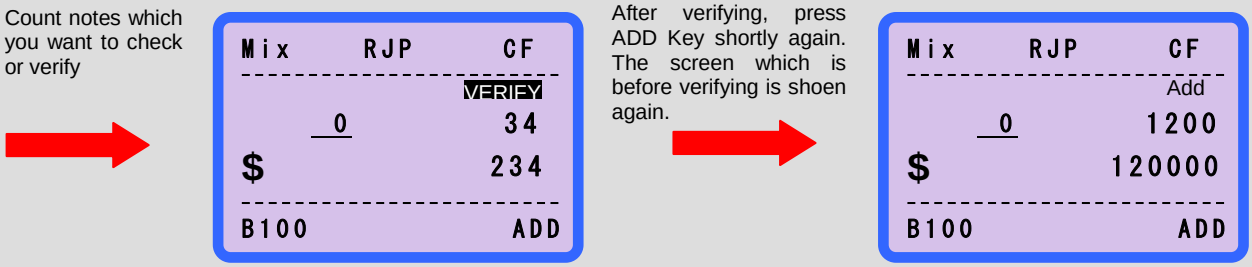

5-4. OPERATION MODE II

♣ OVERVIEW OF COUNTING AND SORTING OPERATION MODE

COUNTING FUNCTIONS	
Mix MODE	Count all denomination of selected currency.
DISPENSER MODE	User can count notes as their wish.
SP MODE	The machine saves information from first inserted note. (Different notes will be separated into the Reject Pocket)
SP-ver MODE	Sp mode plus discrimination of old and new version notes.
SP-verA MODE	Mix mode plus discrimination of old & new & very new version notes. (USD only)
SG MODE	Before counting, the user can select a specific denomination to be counted.
SORTING FUNCTIONS	
Dir-MF MODE	Separation mode by Facing function(all denominations). The machine separates front side or rear side of the notes.
Dir-MO MODE	Mixed separation mode by Orientation function(all denominations). The machine separates different direction notes.
Dir-SF MODE	Separation mode by Facing function(Single denomination).
Dir-SO MODE	Separation mode by Orientation function(Single denomination).
SPECIAL FUNCTION	
SERIAL NUMBER MODE	Prints out the printer and saves the PC to discriminate the serial number of notes.

: Optional function

1. Mix MODE (All denominations)

The machine will handle all denominations of the selected currency.

CURRENCY

Press **CURRENCY** key and select currency, you want.

MODE

Press **MODE** key and select **Mix** mode.

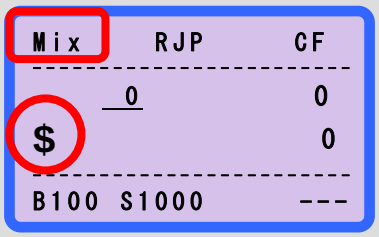

2. DISPENSER MODE

The machine will handle all denominations of the selected currency.

CURRENCY

Press **CURRENCY** key and select currency, you want.

MODE

Press **MODE** key and select **Mix** mode.

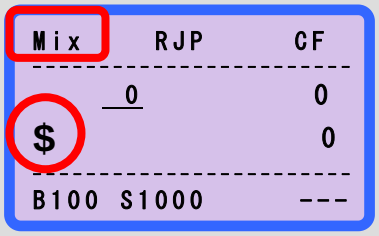

▲/+10 ▼/+1

Press **+1** key to enter the DISPENSER setting mode.

▲/+10

After count and remove the note from Stacker Pocket, Dispenser function is off automatically.

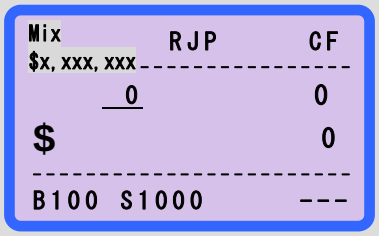

▼/+1

Even if remove the note from Stacker Pocket, the function is activated continuously. If press **+1** key again, Dispenser function is off manually. Or when select another mode by pressing **MODE** key, exit Dispenser Mode.

Using the key command, set the value which you want.
After set the value, exit the MENU using **RESTART** key.

3. SP MODE (Separate Mode)

CURRENCY

Press **CURRENCY** key and select currency, you want.

MODE

Press **MODE** key and select **SP** mode.

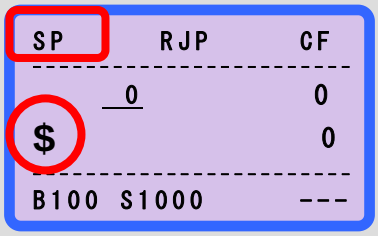

The machine sorts out the same denomination by first inserted note.

4. SP-ver MODE (Separate Mode by Old & New version)

CURRENCY

Press **CURRENCY** key and select currency, you want.

MODE

Press **MODE** key and select **SP** mode.

▲/+10 ▼/+1

Press ▲/+10 key or ▼/+1 key and select SP-ver mode.

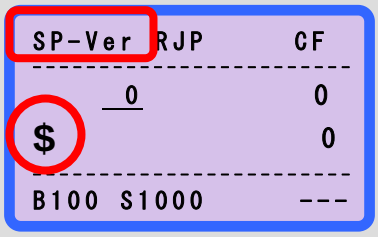

If user selects this mode, the machine send notes to Stacker which have same denomination and version (old and new&very new) with first inserted note.

5. SP-verA MODE(Separate Mode by Old&New&Very new version)

CURRENCY

Press **CURRENCY** key and select currency, you want.

MODE

Press **MODE** key and select **SP** mode.

▲/+10 ▼/+1

Press ▲/+10 key or ▼/+1 key and select SP-verA mode.

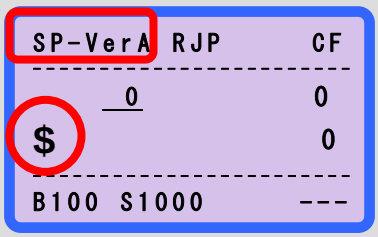

If user selects this mode, the machine send note to Stacker which has same denomination with the first inserted note..

6. SG MODE (Single Mode)

CURRENCY

Press **CURRENCY** key and select currency, you want.

MODE

Press **MODE** key and select **SP** mode.

▲/+10 ▼/+1

Press ▲/+10 key or ▼/+1 key and select the denomination.

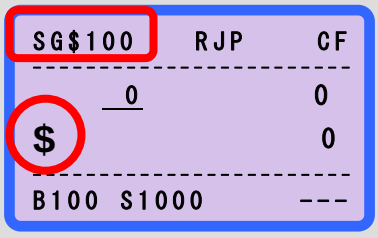

Only the selected denomination will be processed into the Stacker Pocket.

7. Dir-MF MODE (Direction Mixed Facing)

CURRENCY

Press **CURRENCY** key and select currency, you want.

MODE

Press **MODE** key and select **Dir-MF** mode.

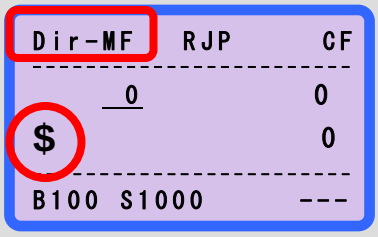

The machine saves front or rear information of the first inserted note.

Other notes with same direction will be processed into Stacker Pocket.

8. Dir-MO MODE (Direction Mixed Orientation)

CURRENCY

Press **CURRENCY** key and select currency, you want.

MODE

Press **MODE** key and select **Dir-MF** mode.

▲/+10 ▼/+1

Press ▲/+10 key or ▼/+1 key and select **Dir-MO** mode.

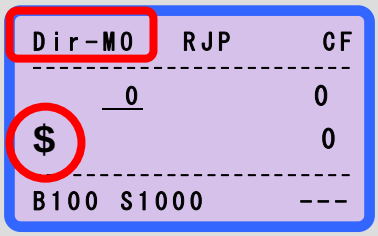

The machine saves the direction information of the first inserted note.

All other notes with same orientation will be processed into Stacker Pocket.

9. Dir-SF MODE (Direction Single Facing)

CURRENCY

Press **CURRENCY** key and select currency, you want.

MODE

Press **MODE** key and select **Dir-MF** mode.

▲/+10 ▼/+1

Press ▲/+10 key or ▼/+1 key and select **Dir-SF** mode.

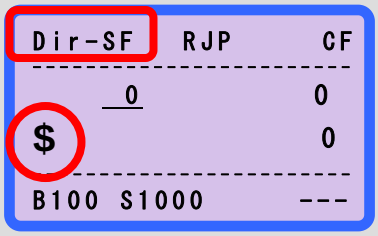

The machine saves front or rear information of the first inserted note.

Notes by same denomination and direction will be processed into Stacker Pocket.

10. Dir-SO MODE (Direction Single Orientation)

Press **CURRENCY** key and select currency, you want.

Press **MODE** key and select **Dir-MF** mode.

Press ▲/+10 key or ▼/+1 key and select **Dir-SO** mode.

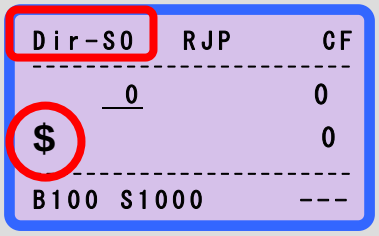

The machine saves the direction information of the first inserted note.

Notes by same denomination and orientation will be processed into Stacker Pocket.

11. SERIAL NUMBER PRINT MODE

Press **CURRENCY** key and select currency, Euro of USD.

Press **MODE** key and select **Serial Number Print** mode.

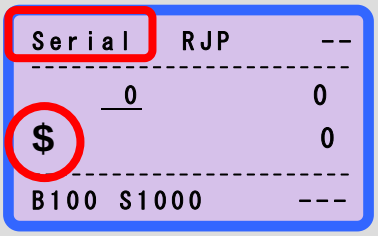

You can count all denomination of selected currency without any selection.

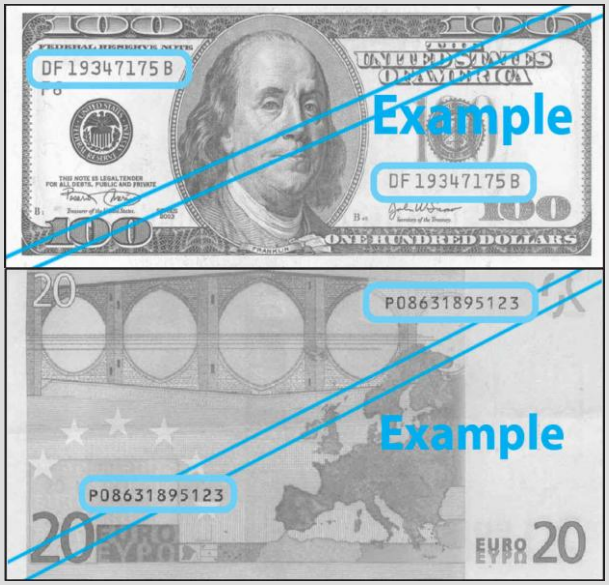

Before counting in serial number print mode, please arrange the notes that the serial number printed side is faced upward.
For example, USD is front side and Euro is rear side.

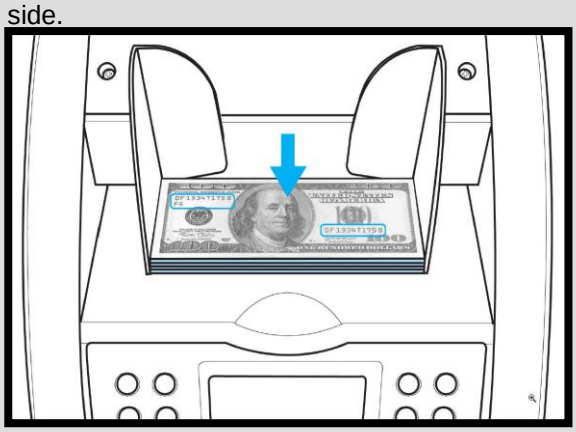

After counting, the LCD Display will display the message as below.

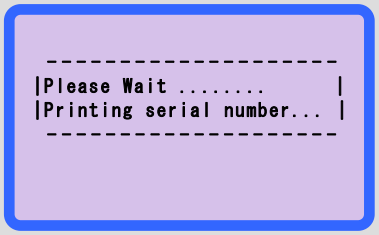

If you wants to count other notes continually, place the note on the HOPPER not remove the notes in the Stacker Pocket.
The printer prints out the serial number successively.
After finishing counting if you remove the notes from the Stacker Pocket, prints out the total notes.

▶In this mode, the machine could not detect the counterfeit using Magnetic sensor.

▶This mode operates only for be exist SRAM in MAIN BOARD. (option)

▶ If you want to know more detail of serial printer, refer to CHAPER 6.

CHAPTER 6. SETTING MODE

6-1. SET THE SERIAL PRINTER

♣ SPECIFICATION OF SERIAL PRINTER

☑ Emulation MODE: EPSON or STAR
(EPSON Emulation MODE is a Default Value of Factory)

☑ Baud Rate: 2,400 bps ~ 115,200 bps

▶ It is possible that change the setting value of baud rate.
Please check the setting value before using.

☑ Data Bits: 8 bits

☑ Stop Bits: 1 bit

☑ Handshaking: DTR/DSR

☑ Parity Check: Disable

☑ Available Serial Printer:

SAMSUNG: SRP-370, SRP-350, etc.

Web Site: **HTTP://WWW.SAMSUNGMINIPRINTERS.COM/**

EPSON: TM-T88III, TM-T90, etc.

Web Site: **HTTP://POS.EPSON.COM/**

♣ Description of serial port

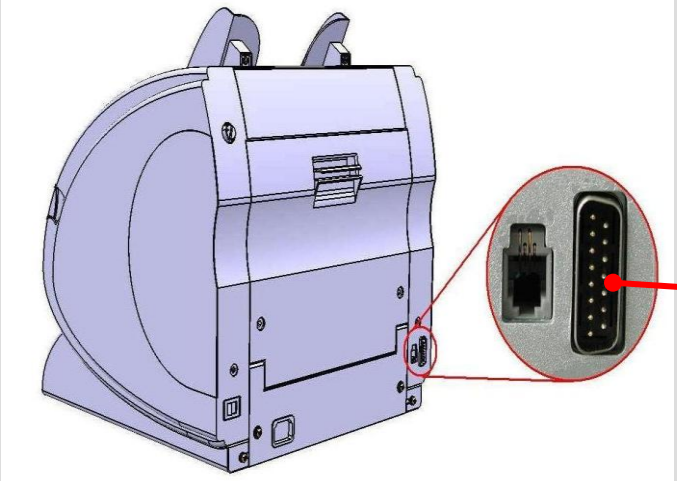

There are two types of interface.
1. SPI (Serial Peripheral Interface)
 - for Upgrade
 - PIN1: GND
 - PIN2, 3, 4, 5, 6, 7, 9, 10, 11, 13, 14, 15: for SPI
2. RS232C
 - for PC communication
 - for serial printer
 - for other devices with RS232C
 - PIN1: GND
 - PIN12: TXD
 - PIN8: RXD

▶ Refer to 4-3. Serial interface Specification to know serial cable construction.

♣ How to set the Serial Printer

Press and hold down **▲/+10** key

Press **PRINT** key to enter Serial Printer Mode.

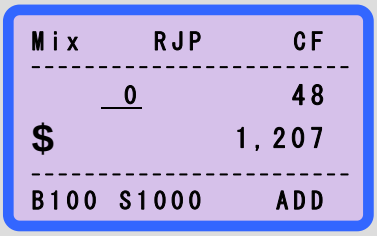

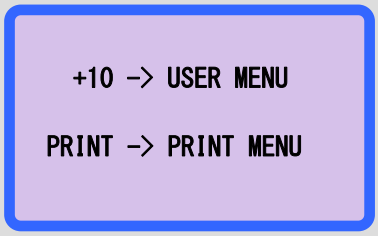

If you want to select the menu, press **MODE** key.

If you want to select the value, Press **PRINT**, **▲/+10** or **▼/+1** key

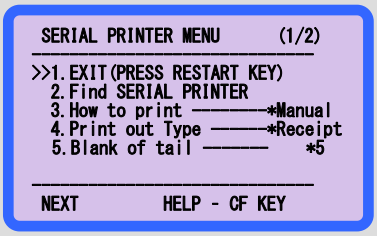

or

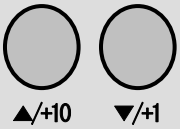

If you changes a setting value, the LCD Display will display the message as below during saving the setting value.

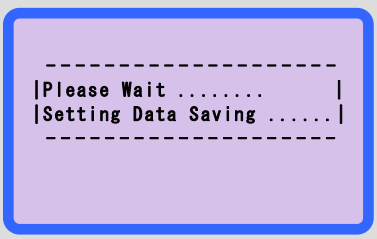

6-2. DESCRIPTION OF SERIAL PRINTER MENU

The page 1/2 of Serial Printer Menu

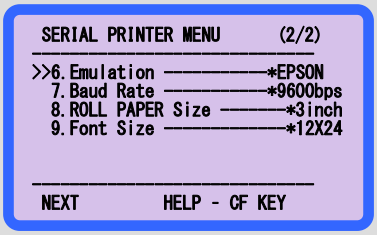

The page 2/2 of Serial Printer Menu

EXIT	Quit the menu	
Find SERIAL PRINTER	Check the connection of machine and printer.	
How to print	Manual	If you want to print the results, you have to press PRINT key.
	Auto	After counting, printing operation starts automatically.
	SemiAuto	When counted notes are removed from Stacker Pocket, printing starts.
Print out Type	Receipt	Print the receipt information
	Detail	Print the denomination, error, etc information
	CIS info	Print the CF information
	CF info	Print the CIS information
	IR info	Print the IR information
	All info	Print the CF, CIS, IR information
Blank of tail	User set up the blank of tail. You can select 4~20.	
Emulation	You can choose Epson or Star type.	
Baud Rate	Set up the baud rate between machine and printer. You can select 2,400~115,200bps.	
ROLL PAPER Size	Set up the size of printer paper. You can select 2 or 3 inch.	
Font Size	Set up the font size. You can select 12x24 or 9x17.	
HELP-CF KEY	If you have question, about this menu, press CF-key.	

▶'*'means the encourage value.
▶When you quit the all menu, press RESTART/STOP key.

6-3. PRINT THE RECEIPT

After finishing counting if you remove the notes from the Stacker Pocket, prints out the total notes.

Press the **PRINT** key

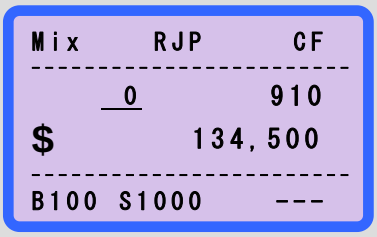

The LCD Display will display the message as below.

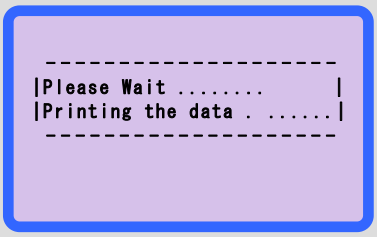

If the notes remain at the Reject Pocket while user press **PRINT** key, following message is displayed.
(If you select the PRINT WARINIG to “YES” of USER SETTING MODE)

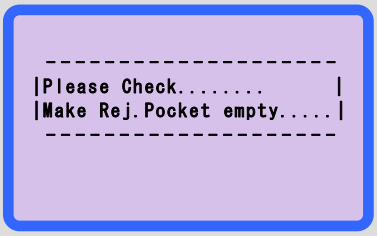

The machine prints out the receipt.

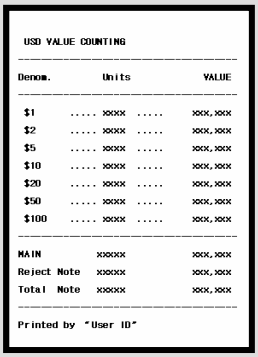

USD VALUE COUNTING

Denom.	Units	VALUE
$1	..... xxxx	xxx,xxx
$2	..... xxxx	xxx,xxx
$5	..... xxxx	xxx,xxx
$10	..... xxxx	xxx,xxx
$20	..... xxxx	xxx,xxx
$50	..... xxxx	xxx,xxx
$100	..... xxxx	xxx,xxx
MAIN	xxxxx	xxx,xxx
Reject Note	xxxxx	xxx,xxx
Total Note	xxxxx	xxx,xxx

Printed by “User ID”

It is possible that prints out the receipt normal operation mode or ADD mode.

♣ THE FORMS OF THE RECEIPT

Normal operation mode

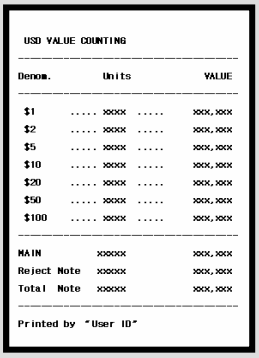

USD VALUE COUNTING

Denom.	Units	VALUE
$1	..... xxxx	xxx,xxx
$2	..... xxxx	xxx,xxx
$5	..... xxxx	xxx,xxx
$10	..... xxxx	xxx,xxx
$20	..... xxxx	xxx,xxx
$50	..... xxxx	xxx,xxx
$100	..... xxxx	xxx,xxx
MAIN	xxxxx	xxx,xxx
Reject Note	xxxxx	xxx,xxx
Total Note	xxxxx	xxx,xxx

Printed by "User ID"

USD

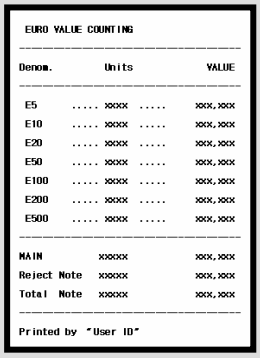

EURO VALUE COUNTING

Denom.	Units	VALUE
E5	..... xxxx	xxx,xxx
E10	..... xxxx	xxx,xxx
E20	..... xxxx	xxx,xxx
E50	..... xxxx	xxx,xxx
E100	..... xxxx	xxx,xxx
E200	..... xxxx	xxx,xxx
E500	..... xxxx	xxx,xxx
MAIN	xxxxx	xxx,xxx
Reject Note	xxxxx	xxx,xxx
Total Note	xxxxx	xxx,xxx

Printed by "User ID"

EURO

Active ADD function

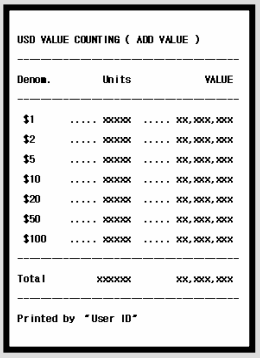

USD VALUE COUNTING (ADD VALUE)

Denom.	Units	VALUE
$1	..... xxxxx	xx,xxx,xxx
$2	..... xxxxx	xx,xxx,xxx
$5	..... xxxxx	xx,xxx,xxx
$10	..... xxxxx	xx,xxx,xxx
$20	..... xxxxx	xx,xxx,xxx
$50	..... xxxxx	xx,xxx,xxx
$100	..... xxxxx	xx,xxx,xxx
Total	xxxxxx	xx,xxx,xxx

Printed by "User ID"

USD

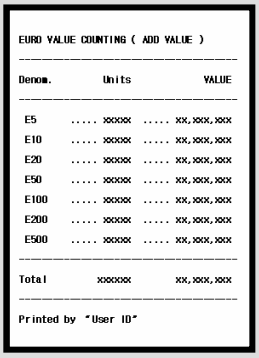

EURO VALUE COUNTING (ADD VALUE)

Denom.	Units	VALUE
E5	..... xxxxx	xx,xxx,xxx
E10	..... xxxxx	xx,xxx,xxx
E20	..... xxxxx	xx,xxx,xxx
E50	..... xxxxx	xx,xxx,xxx
E100	..... xxxxx	xx,xxx,xxx
E200	..... xxxxx	xx,xxx,xxx
E500	..... xxxxx	xx,xxx,xxx
Total	xxxxxx	xx,xxx,xxx

Printed by "User ID"

EURO

6-4. PRINT THE ERROR REPORT

When the counted notes are rejected, user can receive the error report by the LCD Display or printing receipt.

- Error report on the LCD Display.

When the notes are rejected, do not remove the note from reject pocket, press and hold **MODE** key.

The display shows as below.

```
 Reject Reasons
-----------------------------
 Count | Detail Reasons
-----------------------------
     1 | Value Error (E101)
     2 | Jam Error
     3 | E-M1
     4 | E-C1
     5 | E-UH
     6 | Double Error
     7 | Skew Error
-----------------------------
                 HELP - CF KEY
```

Count means the number of rejected notes.

User can move next or previous page pressing **+10** key or **+1** key.

When pressing **MODE** key, Display shows the list of type of error.

```
 Type of Error        | Number
-----------------------------
Count Error           |      3
Function Error        |      0
Value Error           |      1
UV, MG Error          |      3
No CIS Result         |      0
No UV,MG Result       |      0
                      |
                      |
                      |      7
-----------------------------
                 HELP - CF KEY
```

When pressing **MODE** key again, return to previous display.

If want to exit, press **RESTART/STOP** key.

Count Error: This errors is caused by counting states. For example, double notes are inserted, the note is skewed, etc.

Function Error: This error is caused in SP, Single and direction Mode.

Value Error: When CIS sensor data is wrong, this error is caused.

UV, MG Error: When the machine detects the counterfeit, this error is caused.

No CIS Result: When the machine does not get the CIS sensor data, this error is caused.

No UV, MG result: When the machine does not get the UV and MG data, this error is caused.

6-5. How to set the User Setting Mode

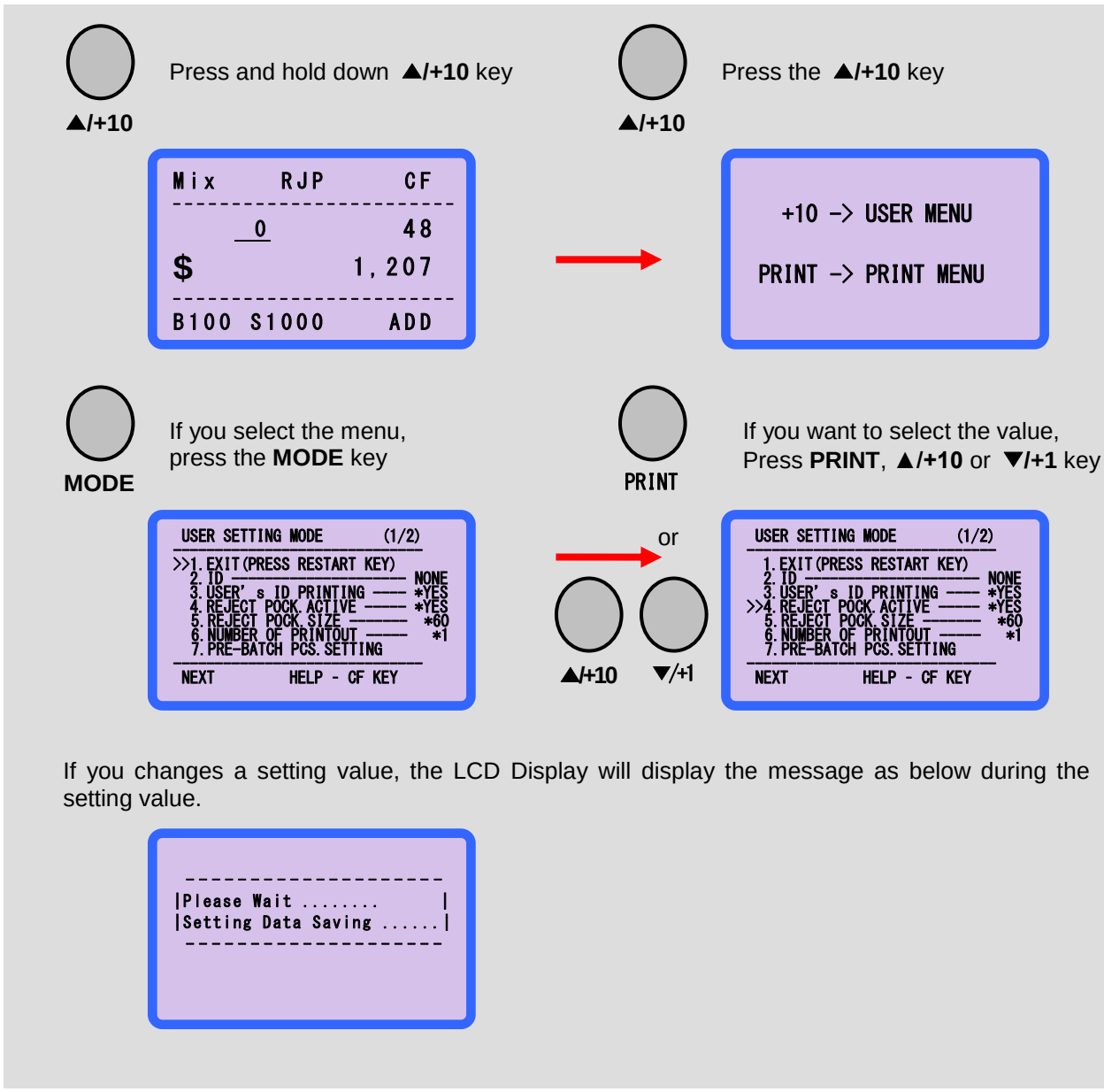

If you changes a setting value, the LCD Display will display the message as below during the setting value.

6-6. DESCRIPTION OF USER SETTING MODE

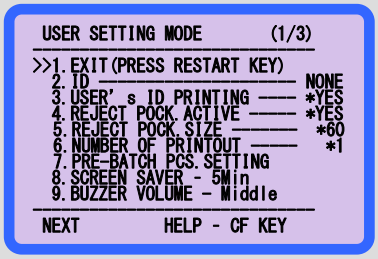

The page 1/3 of User Setting Mode

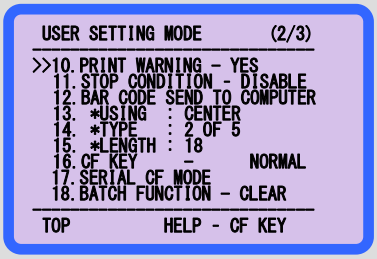

The page 2/3 of User Setting Mode

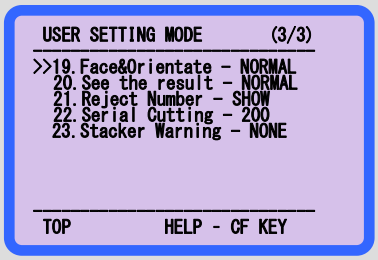

The page 3/3 of User Setting Mode

EXIT	Quit the menu.
ID	Type the user name. Please refer to Detail of User setting mode in next page.
USER NAME PRINTING	When printing out the information, you can choose to print out user name or not.
REJECT POCK.ACTIVE	Select the use of the Reject Pocket or not.
REJECT POCK.SIZE	Set up the limit quantity of Reject Pocket.(30~90notes)
NUMBER OF PRINTOUT	Set up the number of printed sheets. (1~3sheets)
PRE-BATCH PCS.SETTING	You can choose the batch size. Please refer to Detail of User setting mode in next page.
SCREEN SAVER	If user does not use the machine during regular time, the machine enters screen save state. When pressing any key or placing notes on the HOPPER, the machine automatically return back operation state. (NONE~30 Min)
BUZZER VOLUME	You can choose buzzer volume. (No Sound, Minimum, Middle, Maximum)
PRINT WARNING	When you select "YES", the LCD Display will display the message "Please check…. Make rej.Pocket empty…..", If there is any of note in the Reject Pocket.
STOP CONDITION	You can select stop condition when the CF or other error happened.
BAR CODE SEND TO COMPUTER	User can select to print bar code to PC or Printer.
*USING	Select position of printed bar code
*TYPE	User can select bar code type
*LENGTH	Length means bar code length and user can select this. (1~26)
CF KEY	NORMAL: Machine detects all counterfeits. EXCEPTION: Machine detects counterfeits except special note or denomination.
SERIAL CF MODE	Activate CF function in Serial Mode
BATCH FUNCTION- CLEAR	CLEAR – After batch count and remove note from stacker, value and count go to zero. CONTINUE – After batch count, counting information is accumulated.
Face&Orientate	If select CONTINUE, user selects 2 direction mode, Dir-MF and MO only.
See the Result	If select SCREEN, when press PRINT Key shortly, counting result is printed to the display.
Reject Number	User select that reject count number becomes visible or not.
Serial Cutting	User can select how many counting data to print at once. (200~2000)
Stacker Warning	When complete counting, user does not remove the notes from Stacker Pocket. After some times, user put new notes on the hopper, machine shows warning message. If select None, machine cannot check Stacker Pocket before counting. If select 1~300 sec by pressing +10, +1 and Print Key, after passing selected time, machine machine Stacker Pocket and inform Pocket status.

▶'*'means the encourage value.
▶When you quit the all menu, press RESTART/STOP key.
▶ If you want to go to next page immediately, press BATCH Key.

6-7. DETAIL OF USER SETTING MODE

♣ MODE 2.ID : How to input ID

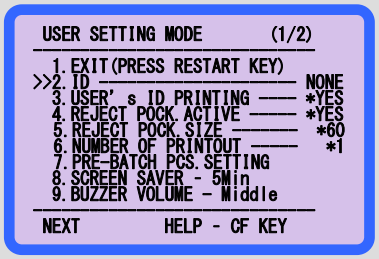

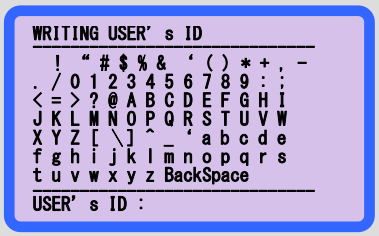

1.Press **MODE** key to move the ">>" make to select "**2.ID -** "
Then press **PRINT** key to enter the "**2.ID –** ".

2.The LCD Display will display as below.
Move to left : **CF**(←)
Move to right : **CURRENCY**(→)
Move to up : **▲/+10**(↑)
Move to down : **▼/+1**(↓)
Delete a character : Select "BackSpace" then press the **PRINT** key.

3.If you want to type a selected character, press the **PRINT** key.

4.When you finish typing ID, press the **RESTART/STOP** key.

♣ MODE 7.PRE-BATCH PCS.SETTING

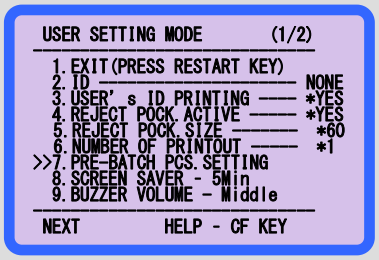

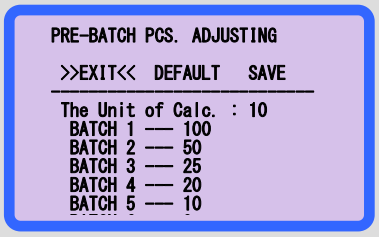

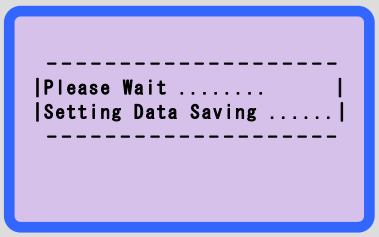

1.Press **MODE** key to move the ">>" make to select "**7.PRE-BATCH PCS.SETTING**" Then press **PRINT** key to enter the "**7.PRE-BATCH PCS.SETTING**"

2.The LCD Display will display as below.
EXIT : Exit the menu.
DEFAULT : Return the standard value.
SAVE : Saves the setting value.

3.If you want to change the **BATCH** value, press the **MODE** key and select the **BATCH** number.

4.Change the value using the **▲/+10** or **▼/+1** key.

5.After finishing, move the ">>" make to select "**SAVE**" then press the **PRINT** key.

6.Display shows the message as left.

7.Press the **RESTART/STOP** key.

CHAPTER 7. DISASSEMBLY & ASSEMBLY
7-0. HARDWARE CHANGE RECORDS

No	Contents	Issued date
1	Modify Reject Pocket and Sorting CAM.	2005-11-15
2	1. Modify Split Bracket. 2. Modify Hopper Cover and Guide (R and L) 3. Add ES Shield.	2006-02-01
3	Modify Front Cover and Kicker Rolller Shaft.	2006-02-24
4	1. Add Main Motor Pulley and change Belt from 255 to 252. 2. Use UV LED U Rank (590A-F3)	2006-05-24
5	1. Modify Module Front part. 2. Add CIS Reflctor.	2006-08-26
6	Change CIS Housing. - CN1 and CN2 are changed to COUNTER LED SENSOR (CN1) - HARNESS FOR CN1 and CN2 are deleted. - Use Hopper Sensor Harness for new CN1.	2006-10-24
7	Add FAN. - Modify Rear Middle Cover, Detector Cover and SMPS OUT PUT-2 Harness.	2006-11-15
8	1. Develop CF-IR Main Board. 2. Add Noise Filter and EMC Core. 3. Modify Hopper Sensor Board.	2007-03-13
9	Developed special CF-IR Main Board (1502) for CF Function in Serial Print Mode.	2007-03-16
10	Develop CIS 2 Main Board - Modify Detector Cover Plate and CIS&CF/IR POER HARNESS(V3)	2007-05-09
11	Develop Barcode machine. - For Barcode ticket, modify BITE ROLLER ASS'Y, CIS REFLECTOR and SPLIT ROLLER.	2007-06-19
12	1. To reduce noise from both sides of Pulley, reduced width of Link Driving Belt from 6.5mm to 4.5mm. 2. To prevent abrasion of MR BRUSH, removed projection area of CF FRONT&REAR SENSOR BOARD.	2007-07-12
13	Develop External Display with FND.	2007-08-28
14	Modify Motor Drive Board	2007-10-06
15	1. Change material of MR CHAIN ROLLER from Rubber to Aluminum. 2. Modify the length of SMPS IN-PUT HARNESS. 3. Modify Main Base.	2007-10-15
16	Add PORON to IR Front Board and IR Rear Board.	2007-11-08
17	1. Modify Reject Pocket Relex Bar - Delete Flex Bar. 2. Delete Swing Slector Plate. 3. Use New Motor. 4. Add Anti-Static Brush(1 unit) to Reject Pocket. 5. Modify Upper Side Plate(L/R).	2007-12-10
18	1. Add Reject Pocket Flex Bar again. 2. Change UV sensor filter from GG to GS. 3. Delete Anti-Static Brush (1 unit) 4. Modify IR Front Module.	2008-02-14
19	1. Add IR Plate. 2. Modify PORON for IR Front and Rear Board.	2008-04-07
20	1. Add Bite Roller Ring (1 unit) 2. Develop Side MG sensor.	2008-04-24

21	Change the length of Reject Count Sensor harness (360mm -> 370mm, 480mm -> 470mm)	2008-07-02
22	change Rotary CAP.	2008-08-18
23	Add isolation plate to SMPS.	2008-09-17
24	Modify SMPS cover to prevent from inserting foreign material.	2009-02-13
25	Modify Main Board for control Motor.	2009-02-17

7-1. MAIN BOARD DISASSEMBLY

1

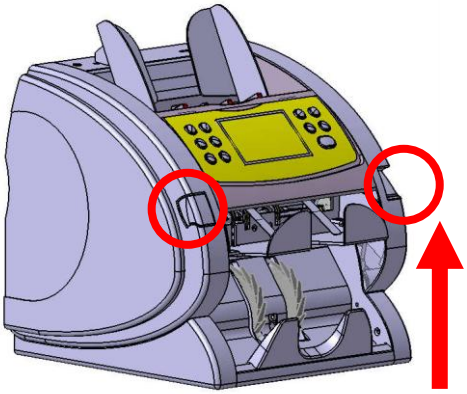

While pressing release button both side, lift up the front side of the machine.

2

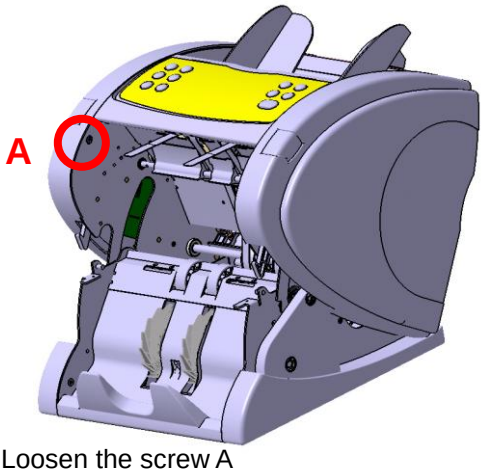

Loosen the screw A

3

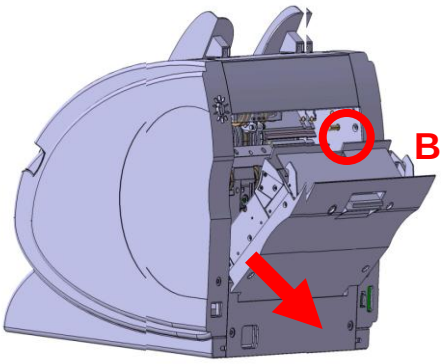

Open the rear cover and loosen the screw B.

4

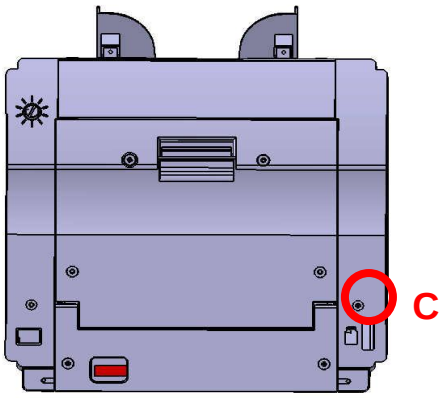

Loosen the screw C

5

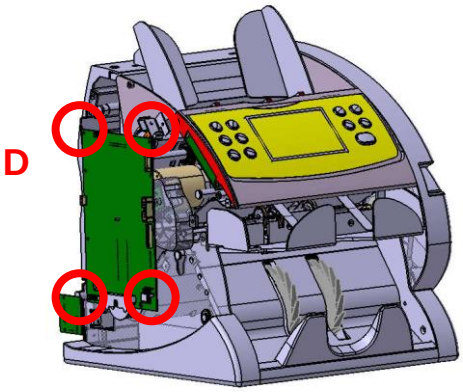

Remove the left side cover and disconnect the harness.

6

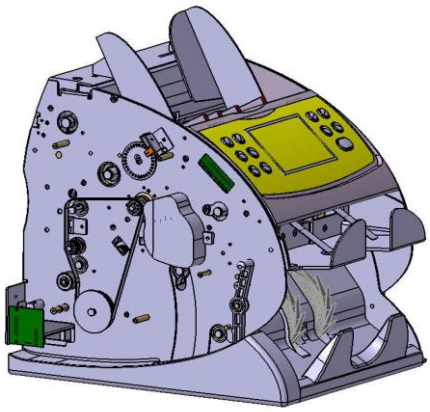

Loosen the screw D and Remove the main board from the machine.

7-2. MOTOR BOARD DISASSEMBLY

1

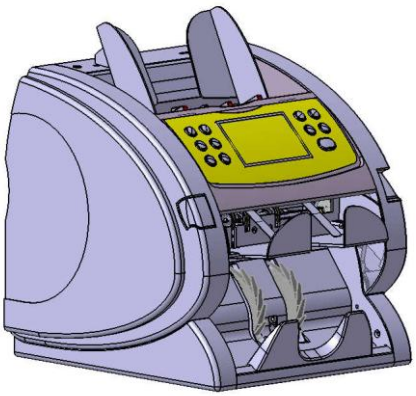

7-3. DETECTOR MODULE DISASSEMBLY

1

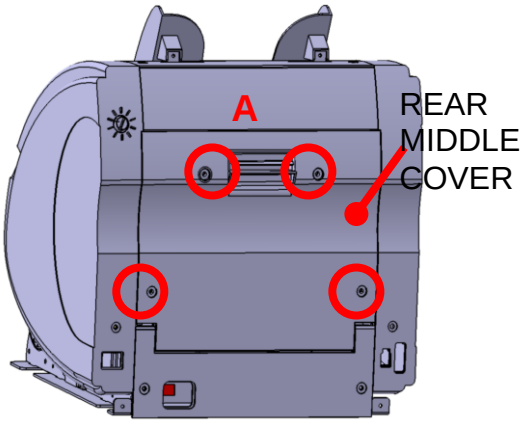

Loosen the screw A and open the REAR MIDDLE COVER.

2

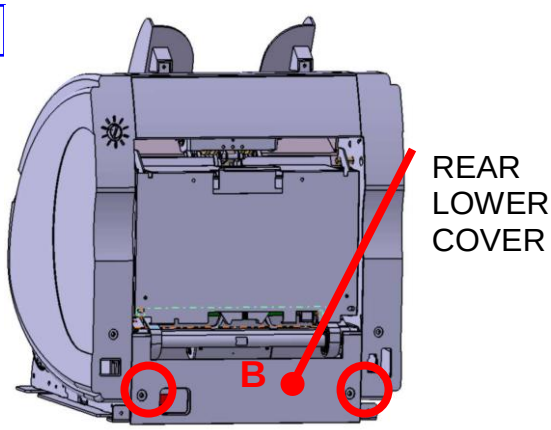

Loosen the screw B and open the REAR LOWER COVER.

3

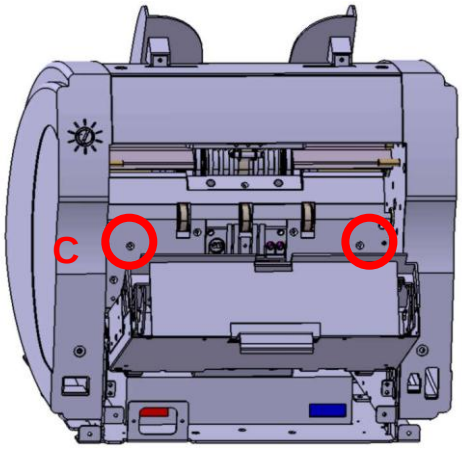

Open the rear cover and loosen the screw C.

4

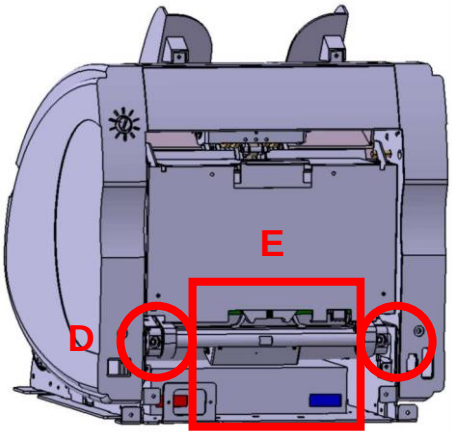

Loosen the screw D and disconnect the harness E.

5

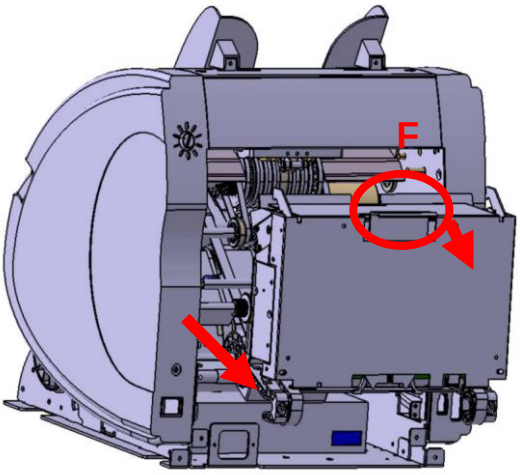

Open the HOOK F and pull out the DETECTOR MODULE to arrow.

6

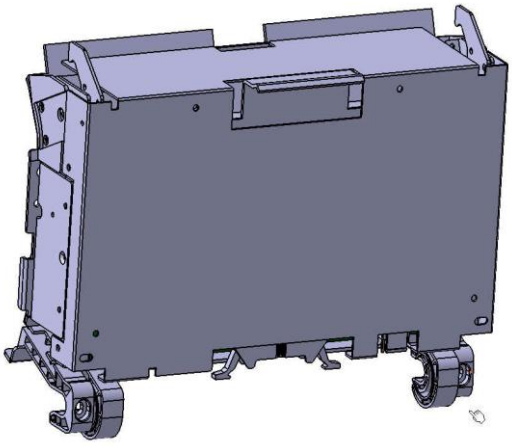

The DETECTOR MODULE has a CF / CIS board and a many sensors.

7-4. DETECTOR MODULE DISASSEMBLY DRAWING

The detector module consists of the CF, CIS board and many sensors.

REAR MODULE DISASSEMBLY

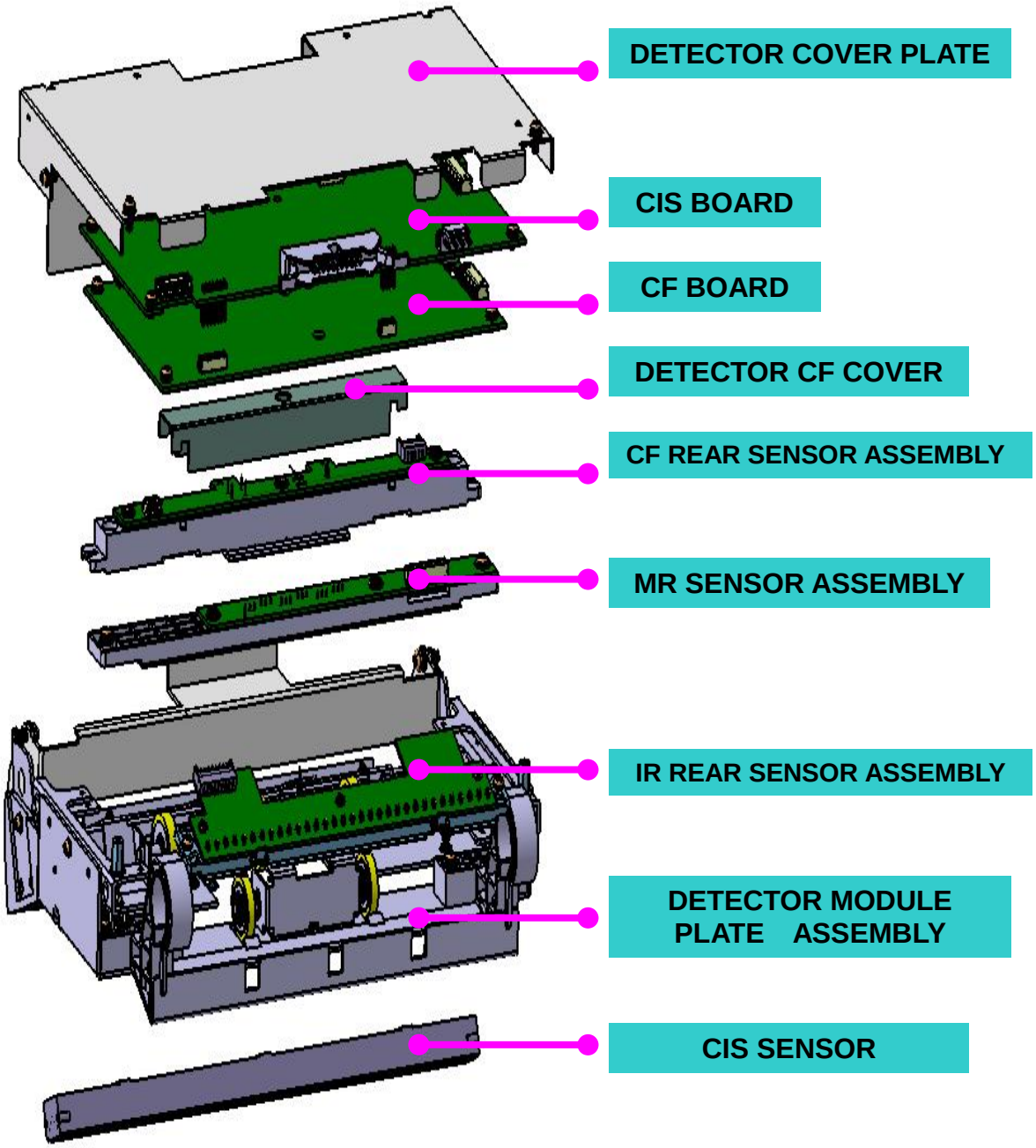

FRONT MODULE DISASSEMBLY

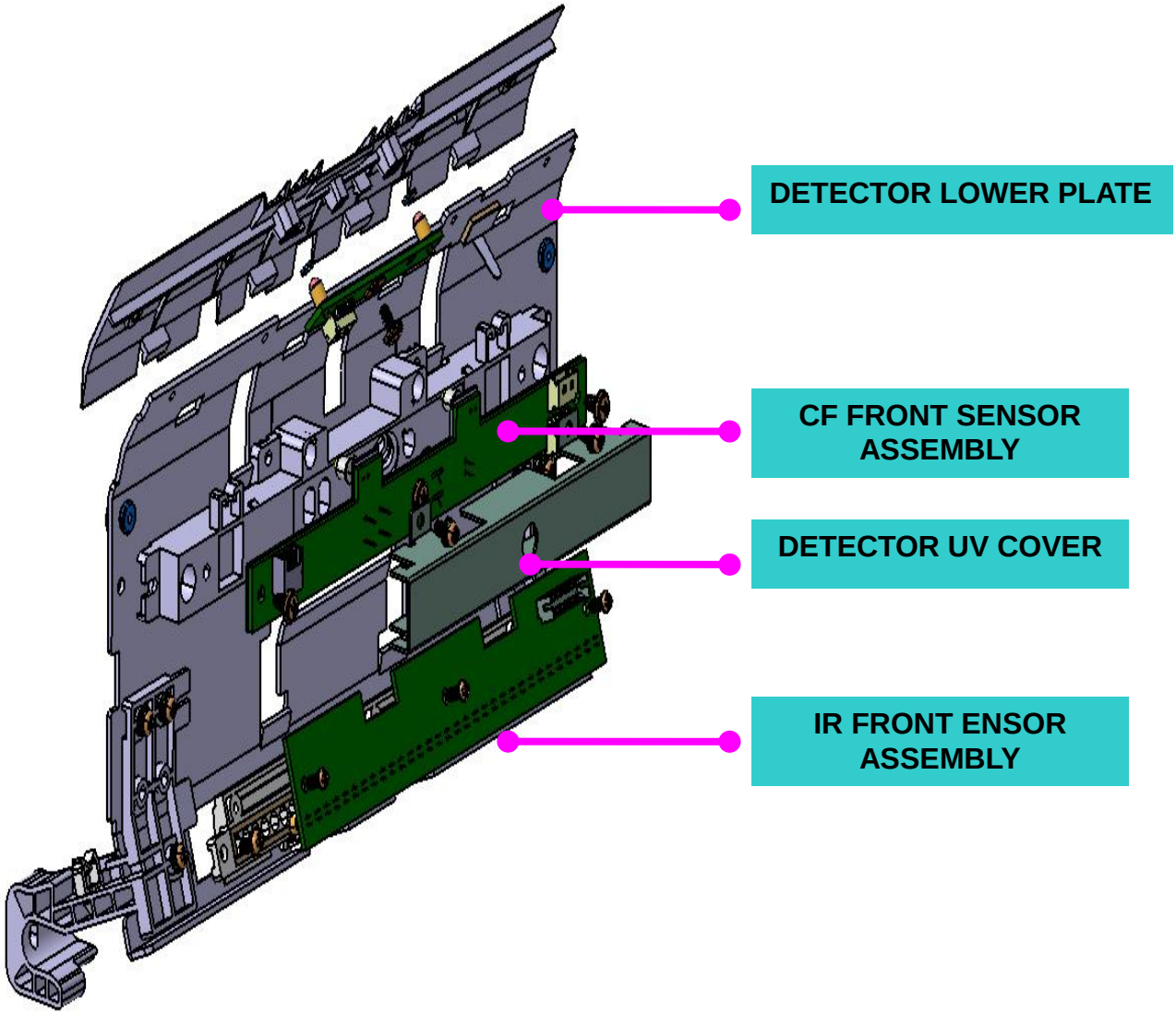

7-5. CIS BOARD DISASSEMBLY

1

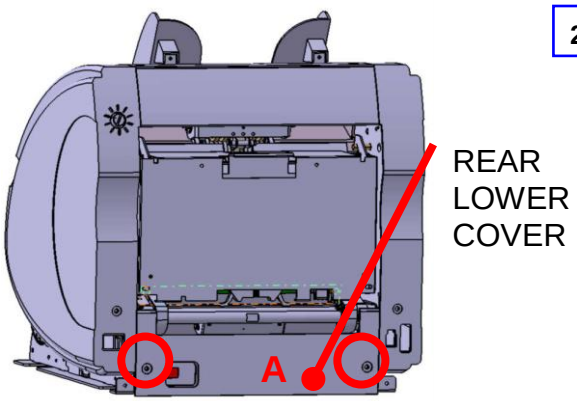

Loosen the screw A and open the REAR LOWER COVER.

2

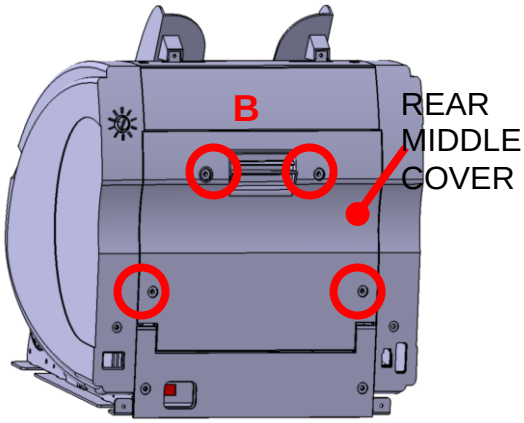

Loosen the screw B and open the REAR MIDDLE COVER.

3

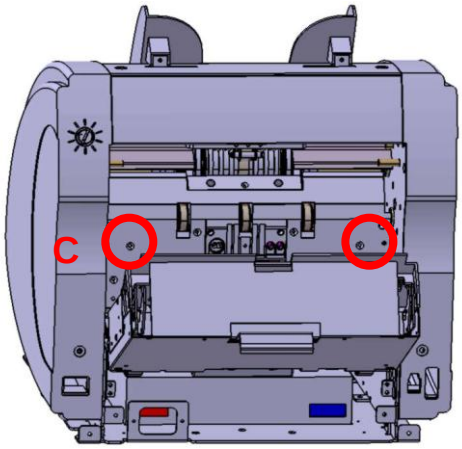

Open the rear cover and loosen the screw C.

4

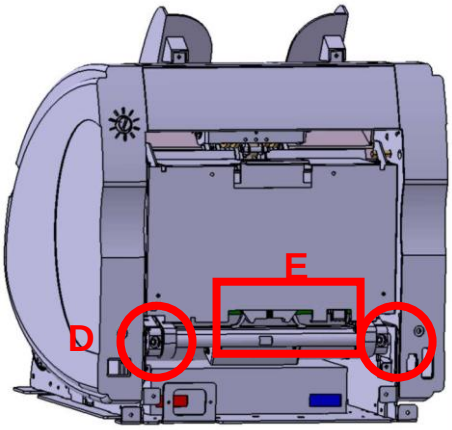

Loosen the screw D and disconnect the harness E.

5

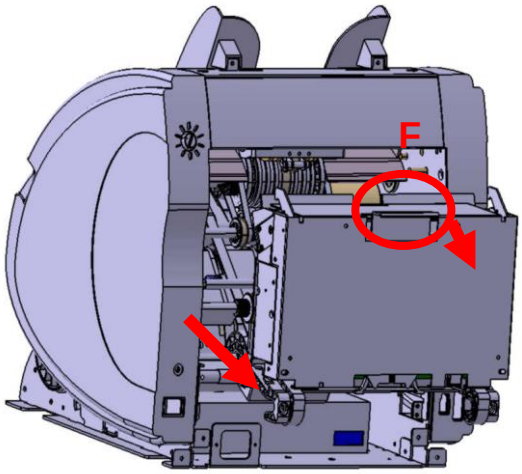

Open the HOOK F and pull out the DETECTOR MODULE to arrow.

6

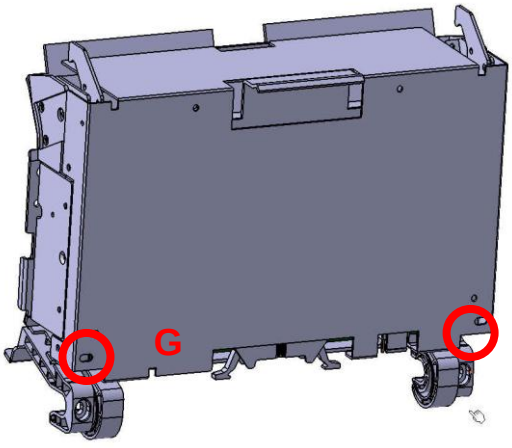

Loosen the screw G.

7

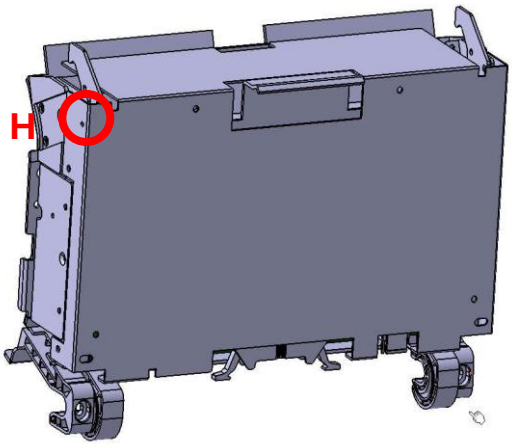

Loosen the screw H.

8

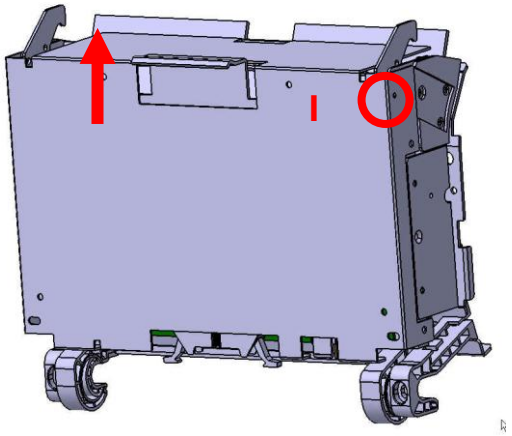

Loosen the screw I and remove the DETECTOR COVER PLATE.

9

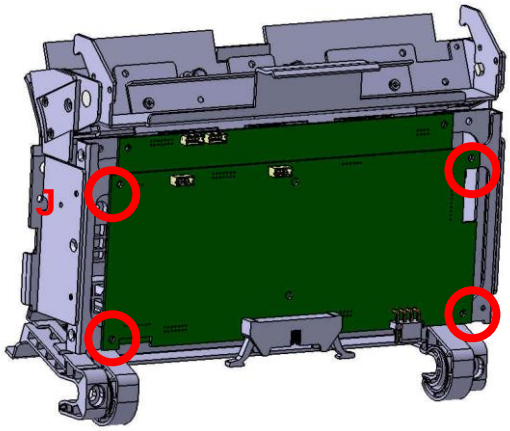

Disconnect the harness of CIS board and loosen the Screw J.

10

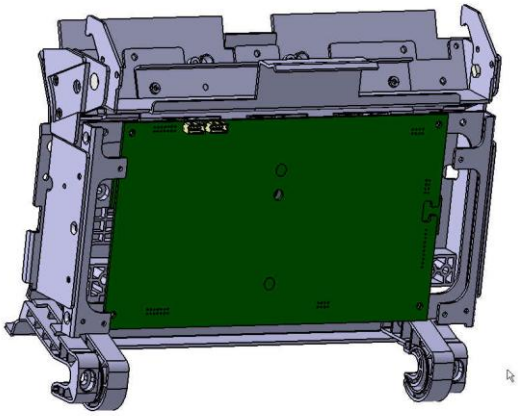

Remove the CIS board from the DETECTOR MODULE.

7-6. CF BOARD DISASSEMBLY

1

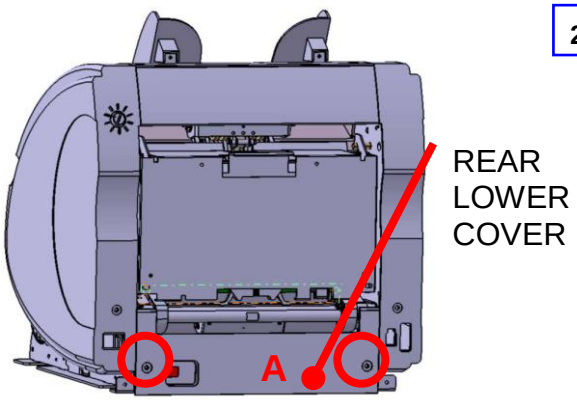

Loosen the screw A and open the REAR LOWER COVER.

2

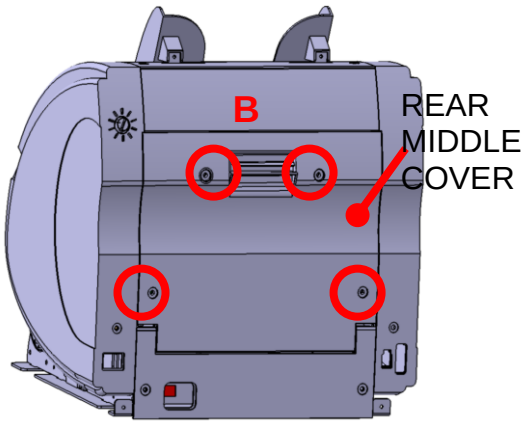

Loosen the screw B and open the REAR MIDDLE COVER.

3

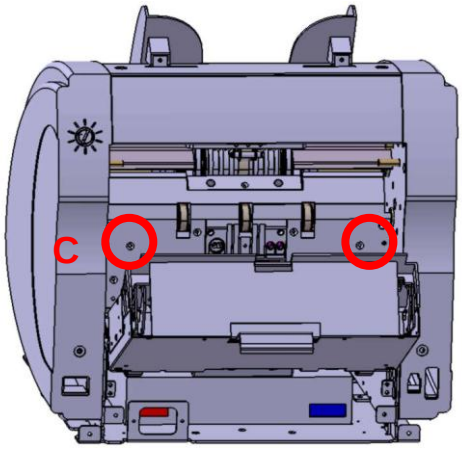

Open the rear cover and loosen the screw C.

4

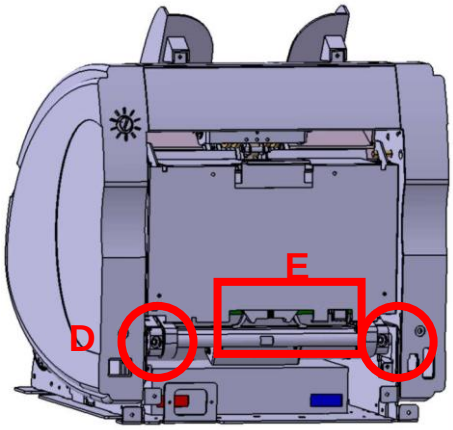

Loosen the screw D and disconnect the harness E.

5

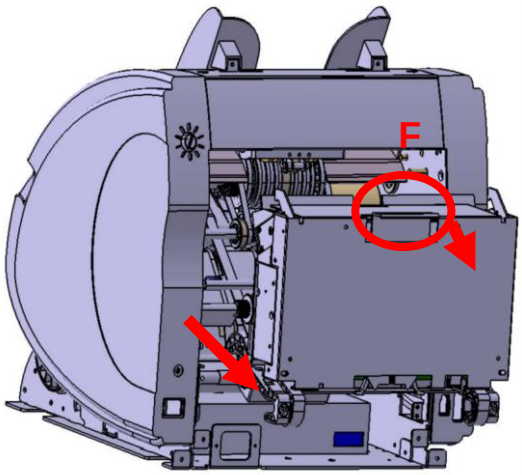

Open the HOOK F and pull out the DETECTOR MODULE to arrow.

6

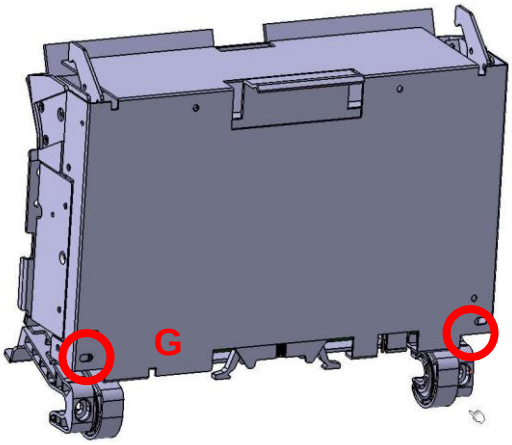

Loosen the screw G.

7

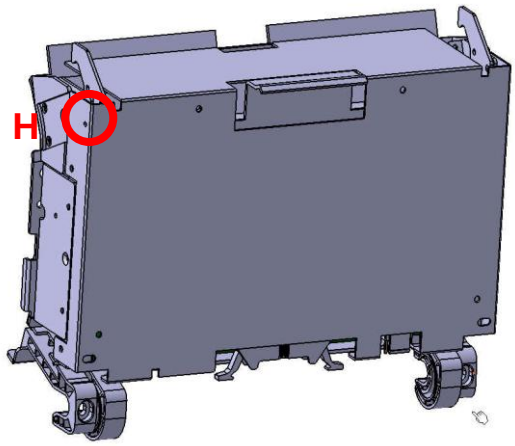

Loosen the screw H.

8

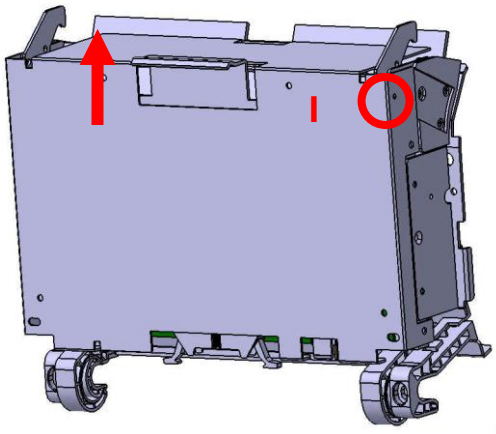

Loosen the screw I and remove the DETECTOR COVER PLATE.

9

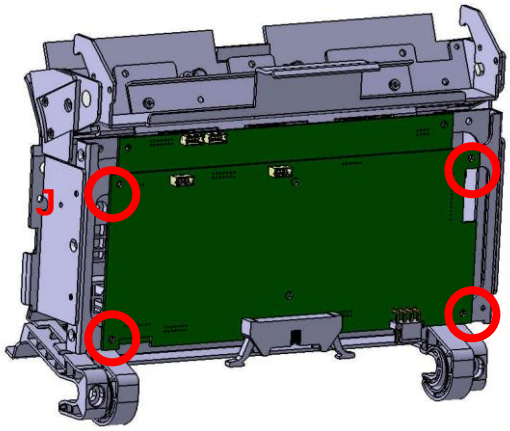

Disconnect the harness of CIS board and loosen the Screw J.

10

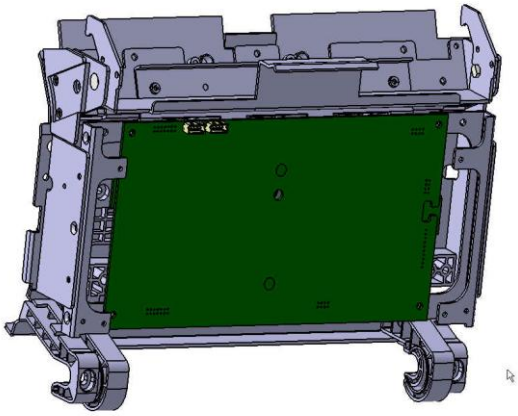

Remove the CIS board from the DETECTOR MODULE and disconnect the harness of CF board.

11

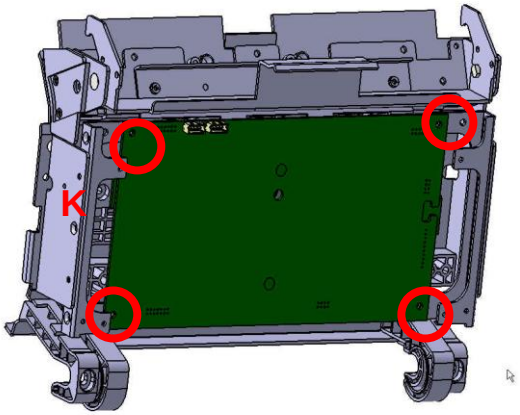

Loosen the Screw K.

12

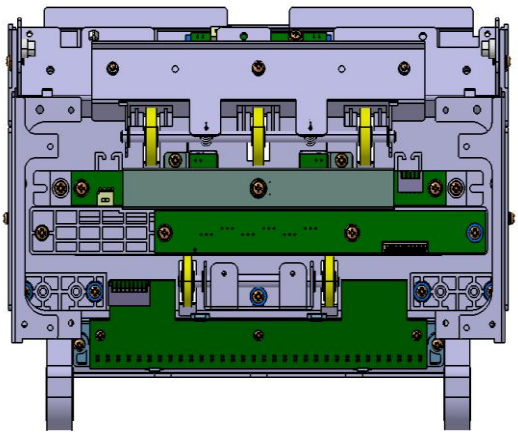

Remove the CIS board from the DETECTOR MODULE.

7-7. CF REAR & MR SENSOR DISASSEMBLY

1

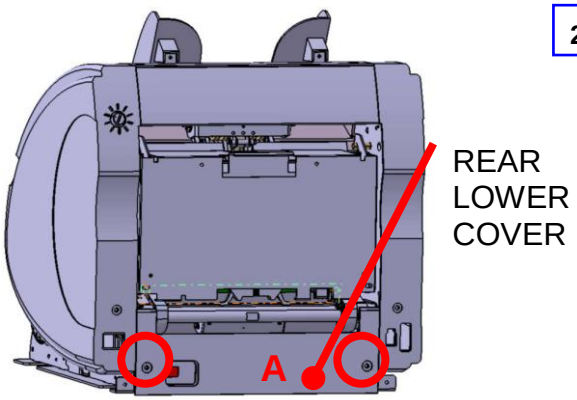

Loosen the screw A and open the REAR LOWER COVER.

2

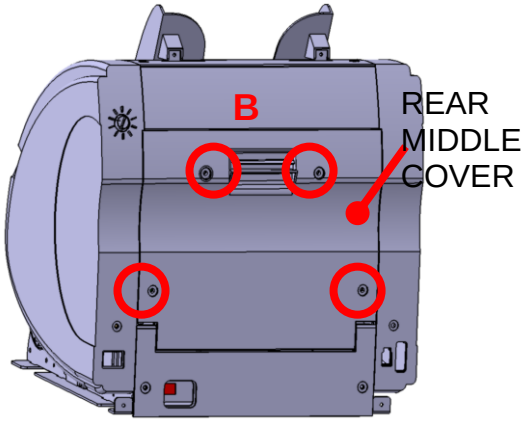

Loosen the screw B and open the REAR MIDDLE COVER.

3

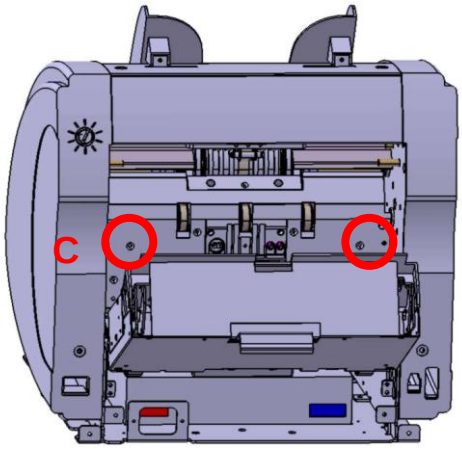

Open the rear cover and loosen the screw C.

4

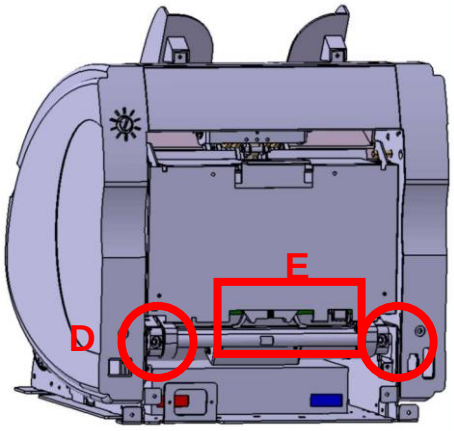

Loosen the screw D and disconnect the harness E.

5

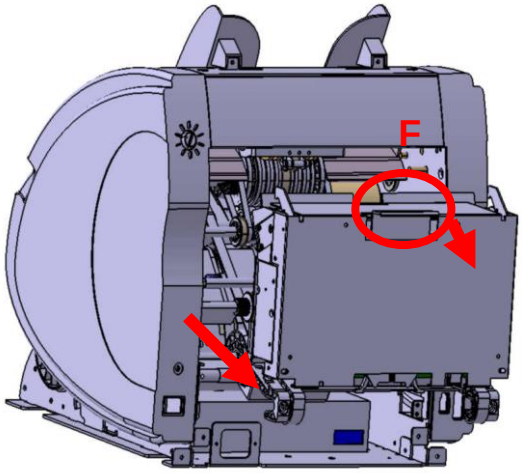

Open the HOOK F and pull out the DETECTOR MODULE to arrow.

6

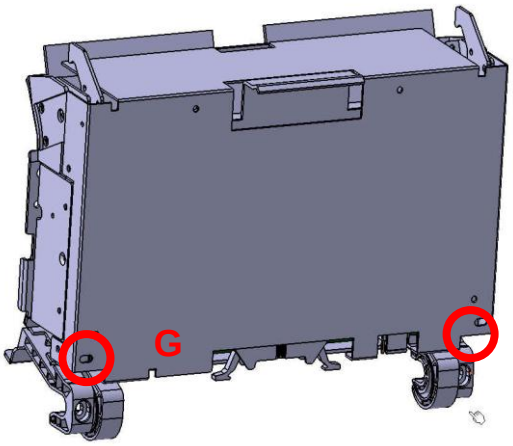

Loosen the screw G.

7

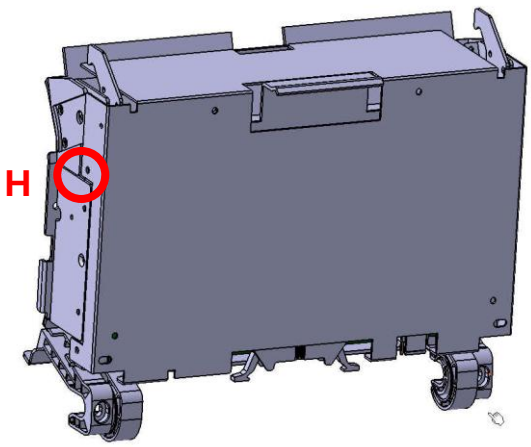

Loosen the screw H.

8

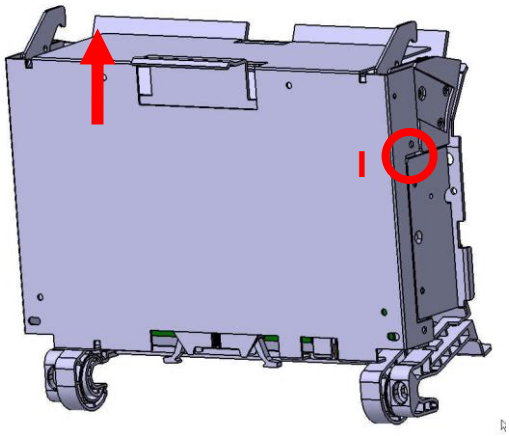

Loosen the screw I and remove the DETECTOR COVER PLATE.

9

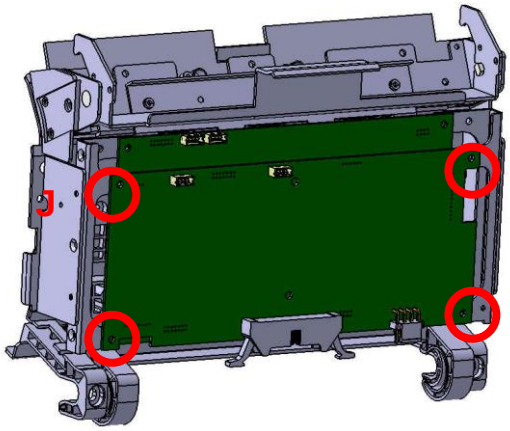

Disconnect the harness of CIS board and loosen the Screw J.

10

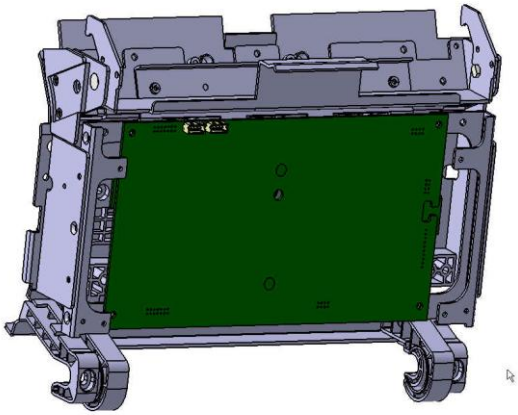

Remove the CIS board from the DETECTOR MODULE and disconnect the harness of CF board.

11

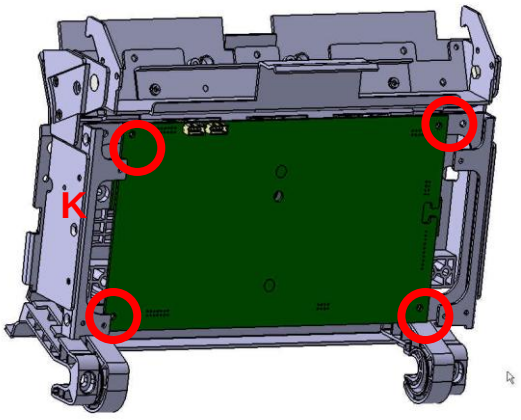

Loosen the Screw K.

12

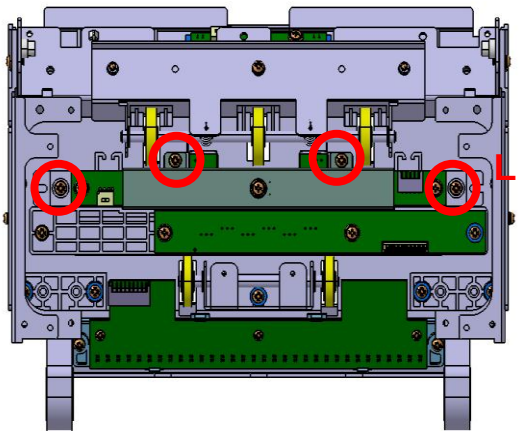

Remove the CIS board from the DETECTOR MODULE and loosen the screw L.

13

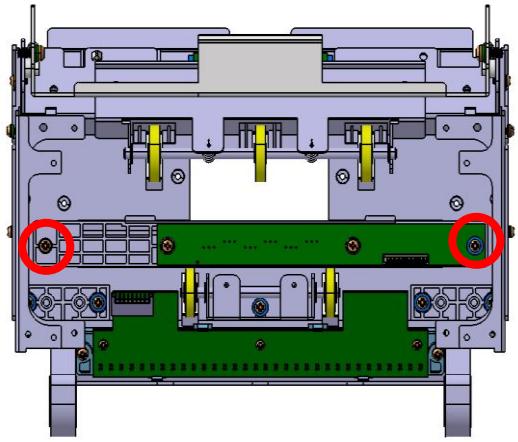

Remove the UPPER SENSOR assembly and loosen the screw M.

14

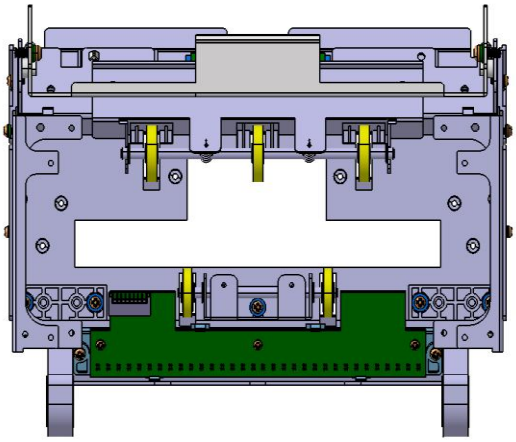

Remove the MR SENSOR assembly.

7-8. IR REAR SENSOR DISASSEMBLY

1

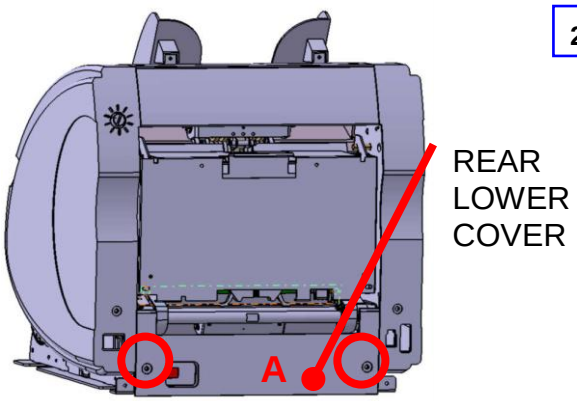

Loosen the screw A and open the REAR LOWER COVER.

2

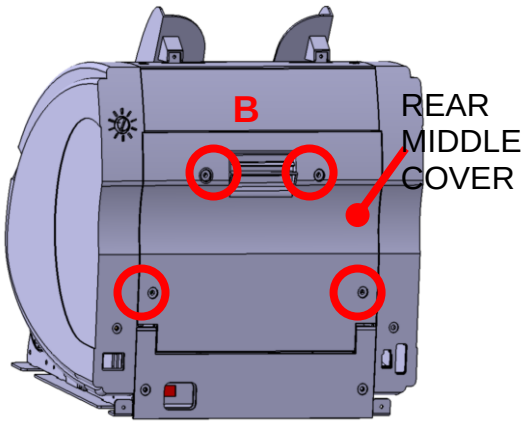

Loosen the screw B and open the REAR MIDDLE COVER.

3

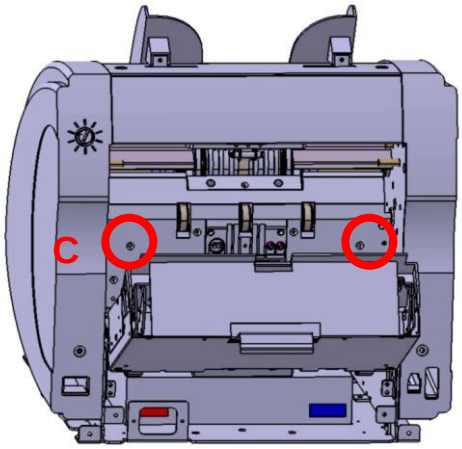

Open the rear cover and loosen the screw C.

4

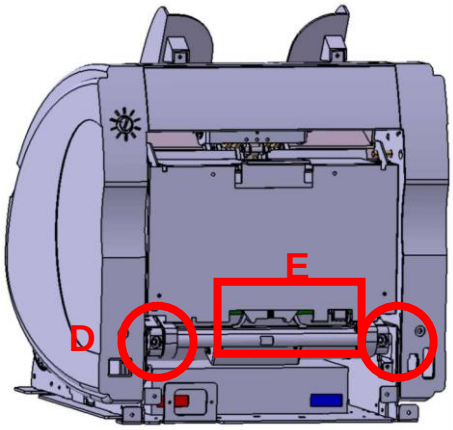

Loosen the screw D and disconnect the harness E.

5

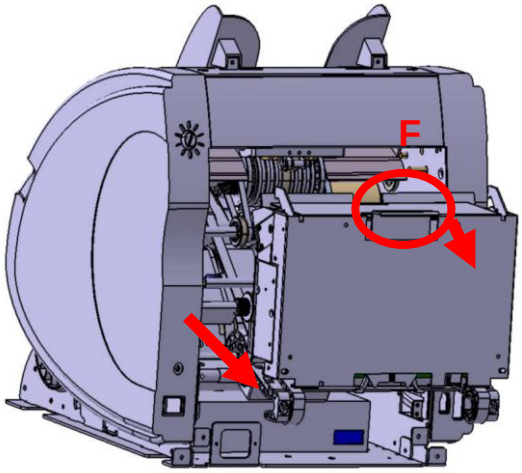

Open the HOOK F and pull out the DETECTOR MODULE to arrow.

6

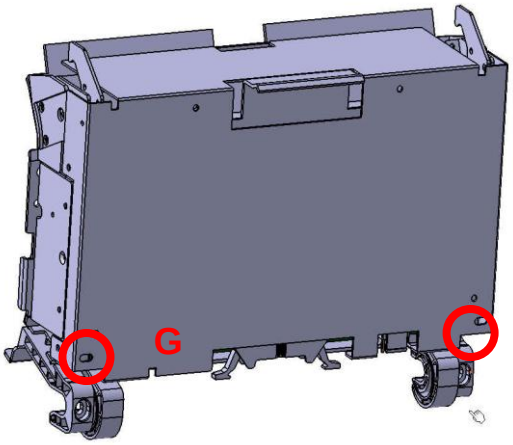

Loosen the screw G.

7

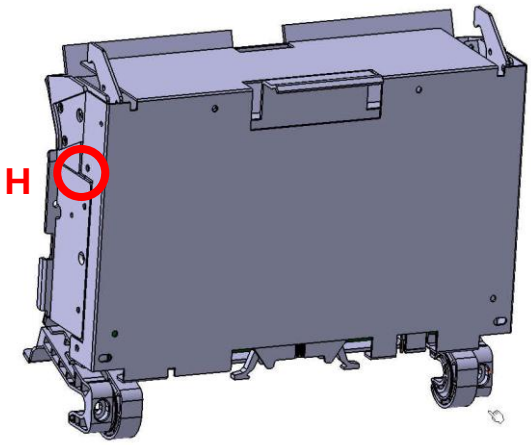

Loosen the screw H.

8

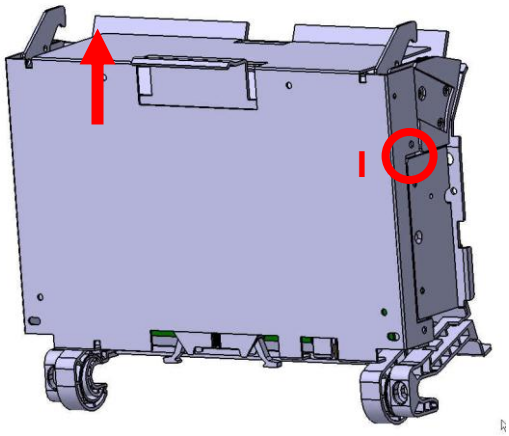

Loosen the screw I and remove the DETECTOR COVER PLATE.

9

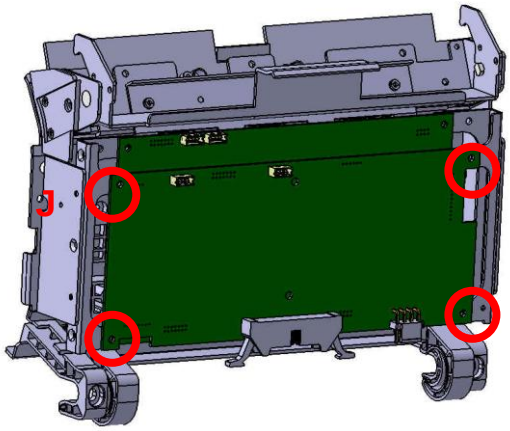

Disconnect the harness of CIS board and loosen the Screw J.

10

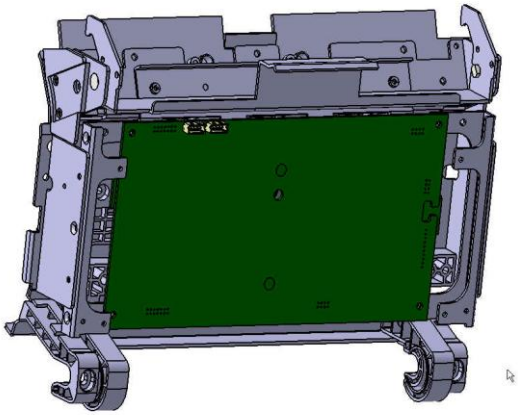

Remove the CIS board from the DETECTOR MODULE and disconnect the harness of CF board.

11

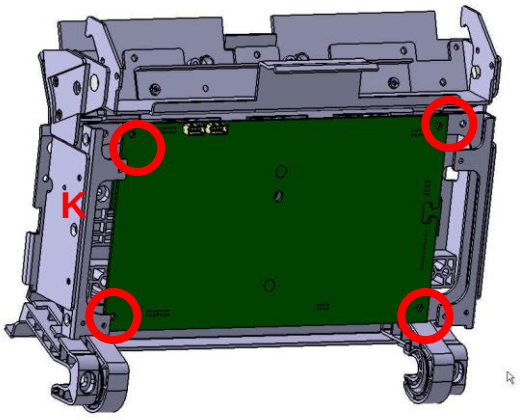

Loosen the Screw K.

12

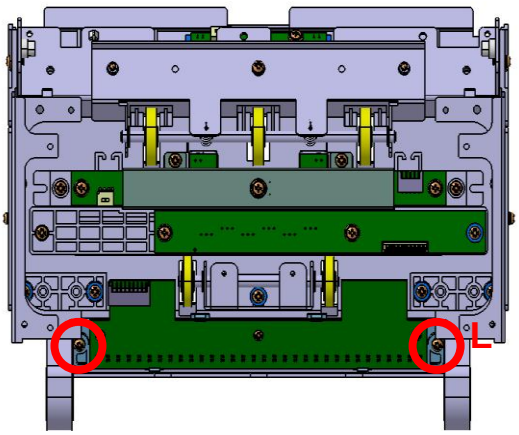

Remove the IR REAR SENSOR board from the DETECTOR MODULE and loosen the screw L.

13

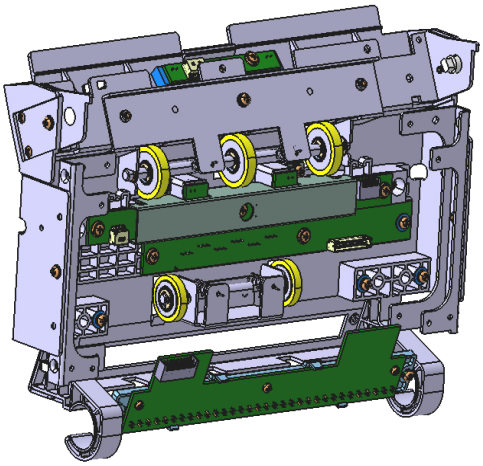

Remove the IR REAR SENSOR board assembly.

7-9. CIS(Contact Image Sensor) DISASSEMBLY

1

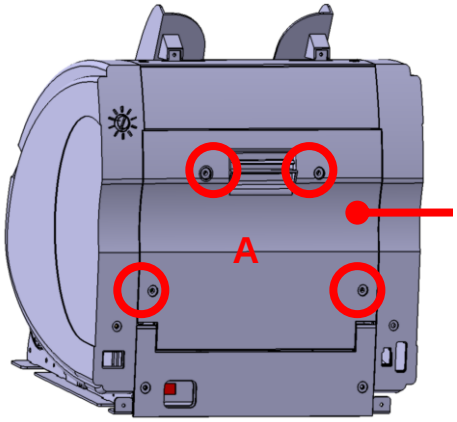

Loosen the screw A and open the REAR MIDDLE COVER.

2

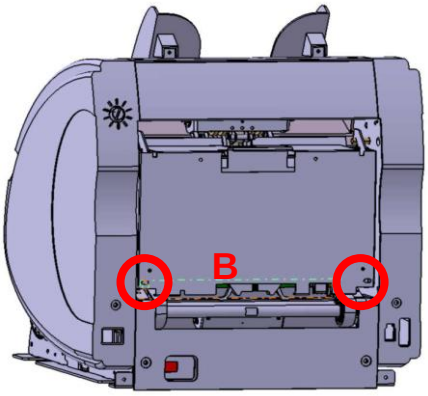

Loosen the screw B

3

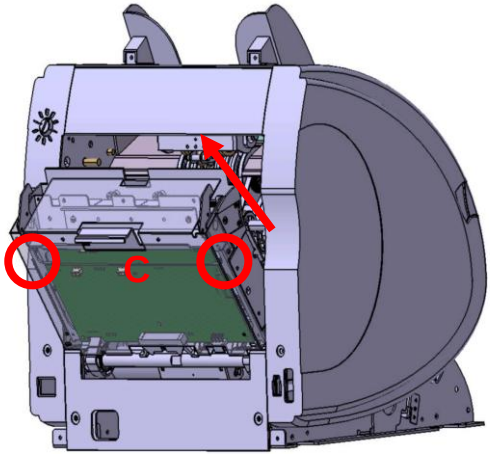

Open the rear cover and loosen the screw C and pull out the detector cover plate to arrow.

4

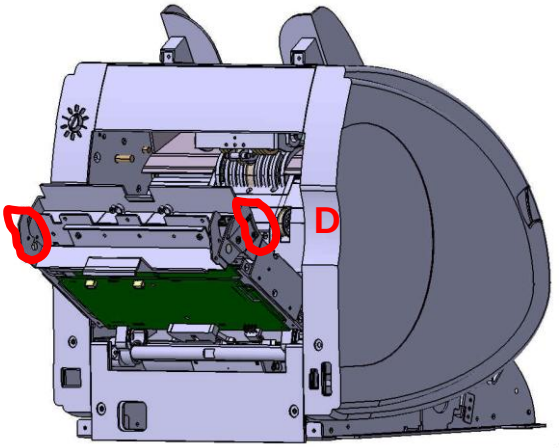

Loosen the screw D(both sides, 4 points).

5

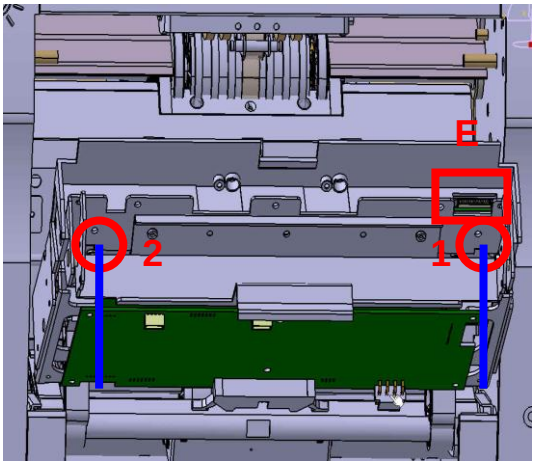

Disconnect the harness E and push the hole using the thin tool. Step 1, 2.

6

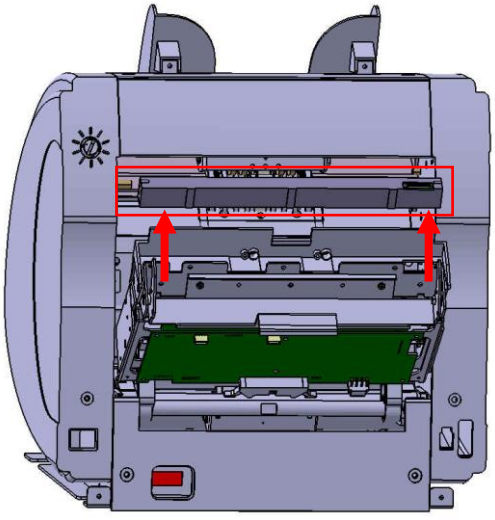

CIS will be out to arrow.

7-10. UPGRADE & EXTERNAL BOARD DISASSEMBLY

1

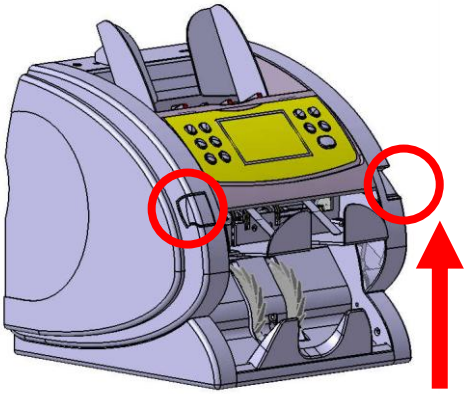

While pressing release button both side, lift up the front side of the machine.

2

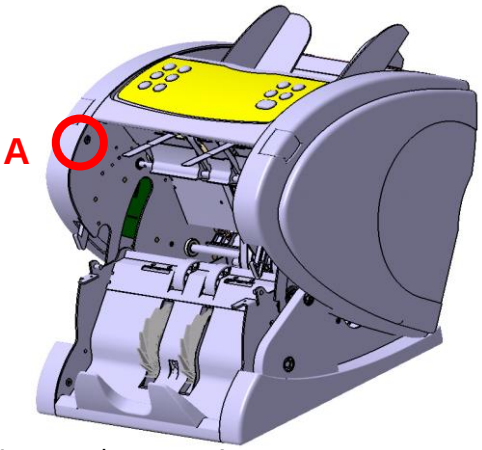

Loosen the screw A

3

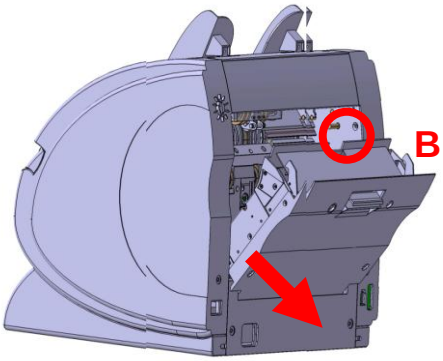

Open the rear cover and loosen the screw B.

4

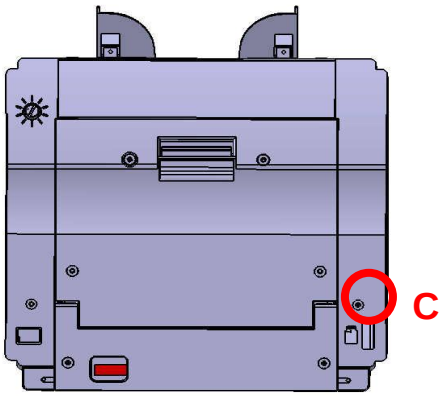

Loosen the screw C

5

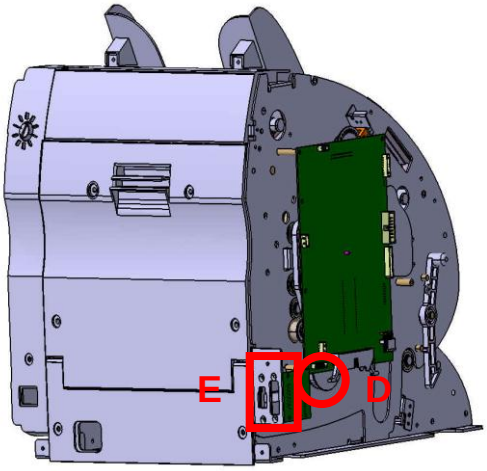

Disconnect the harness D and loosen the screw E (4 point).

6

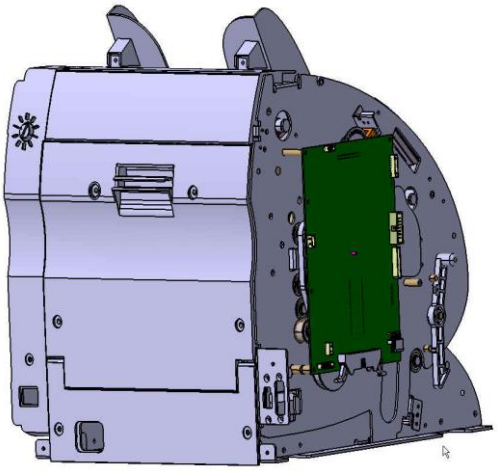

Remove the upgrade board from the machine.

7-11. DISPLAY BOARD DISASSEMBLY

1

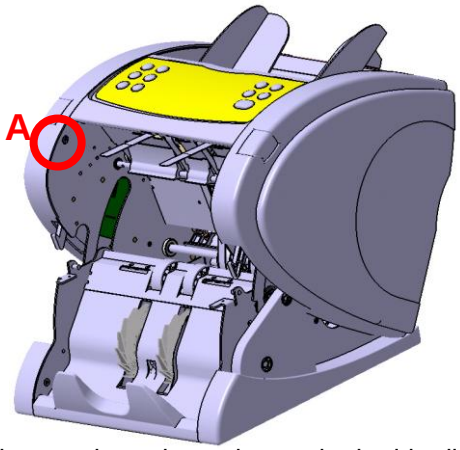

While pressing release button both side, lift up the front side of the machine.

2

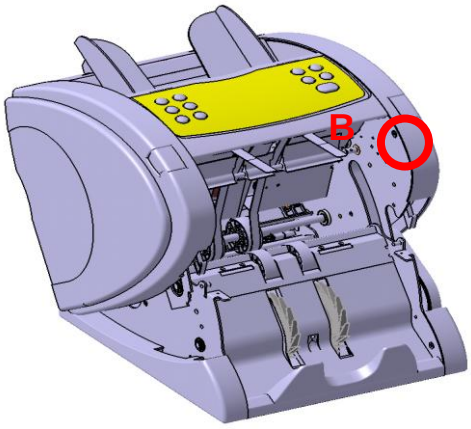

Loosen the screw A and B

3

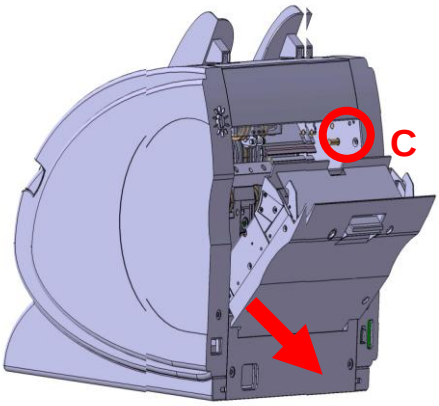

Open the rear cover and loosen the screw C.

4

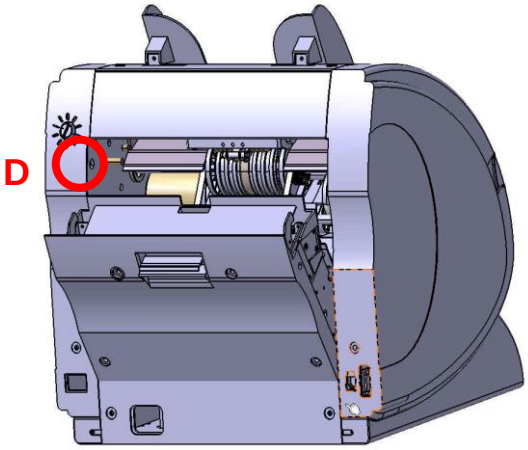

Loosen the screw D.

5

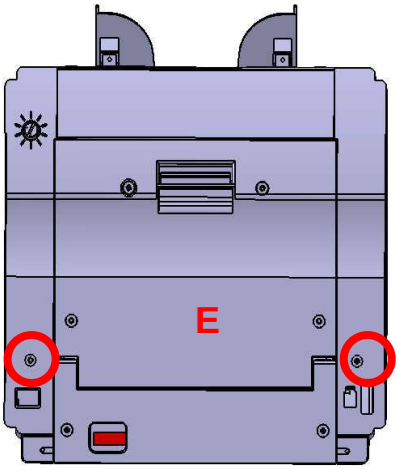

Loosen the screw E and remove the left and right side cover from the machine.

6

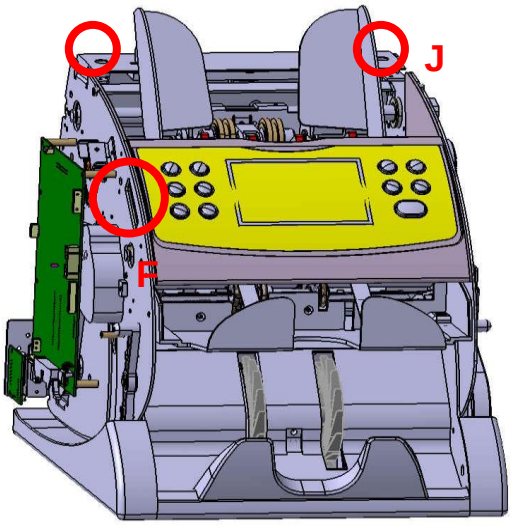

Disconnect the harness F and loosen the screw J and remove the HOPPER GUIDE COVER.

7

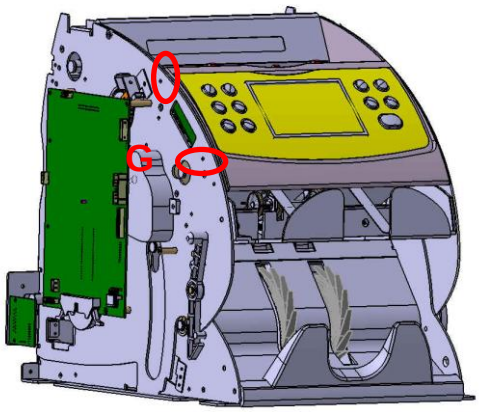

Loosen the screw G.

8

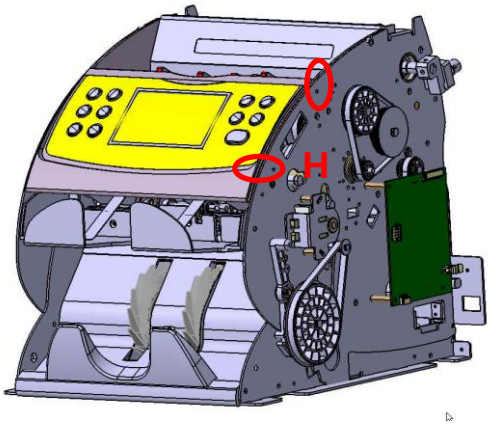

Loosen the screw H.
.

9

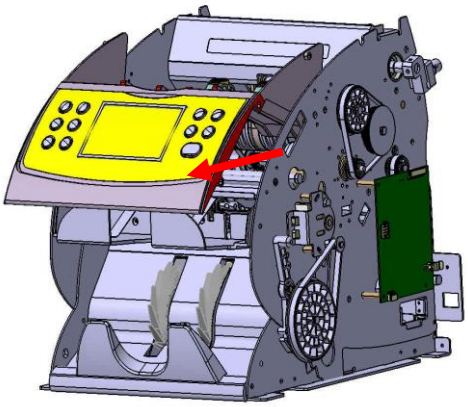

Remove the DISPLAY assembly to arrow.

10

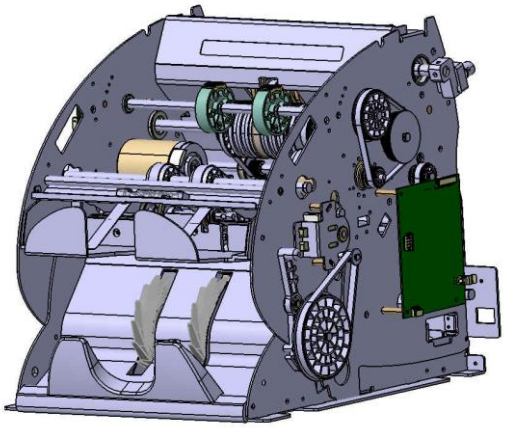

Disconnect the harness of the DISPLAY board.

11

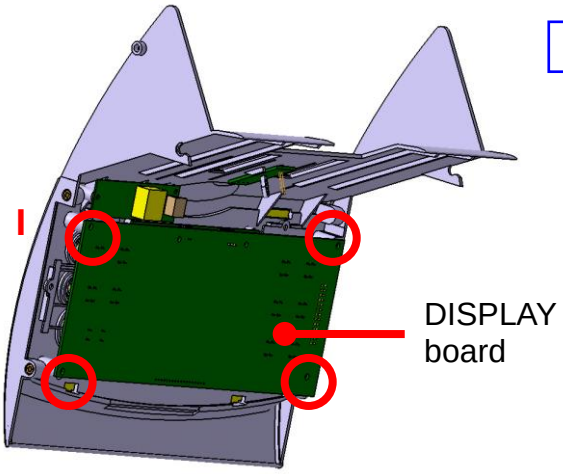

Loosen the screw I and remove the DISPLAY board.

12

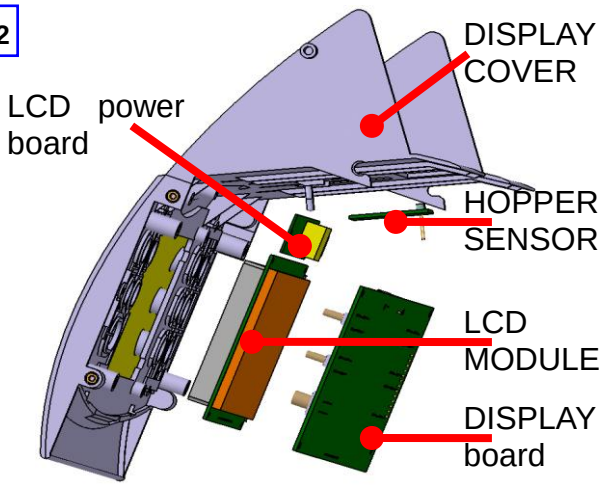

DISPLAY assembly consists of several parts.

7-12. SMPS DISASSEMBLY

1

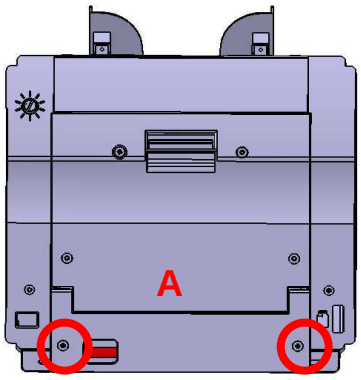

Loosen the screw A.

2

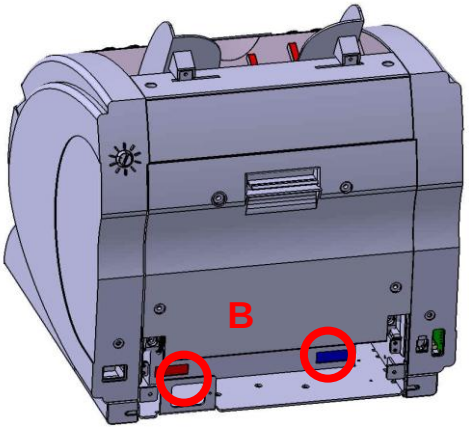

Disconnect the harness B.

3

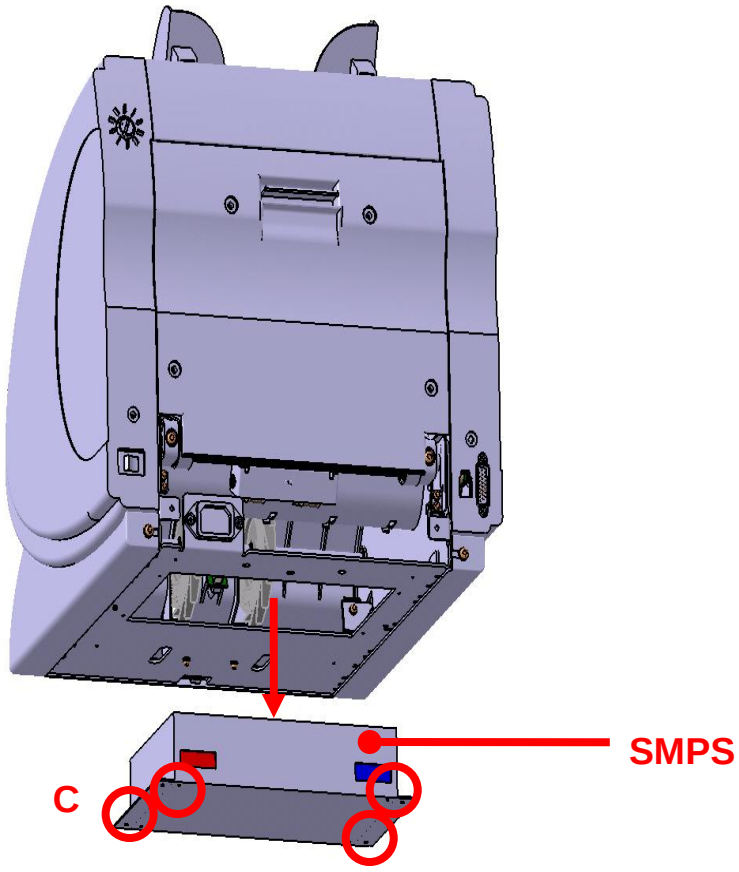

Loosen the screw C (4 points) and remove the SMPS.

7-13. MAIN MOTOR DISASSEMBLY

1

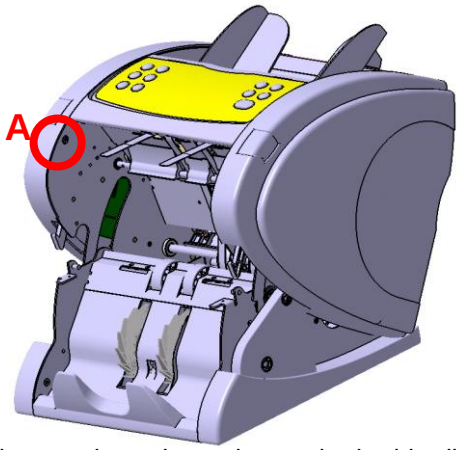

While pressing release button both side, lift up the front side of the machine.

2

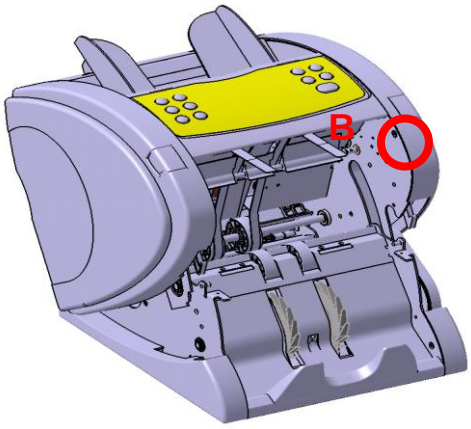

Loosen the screw A and B

3

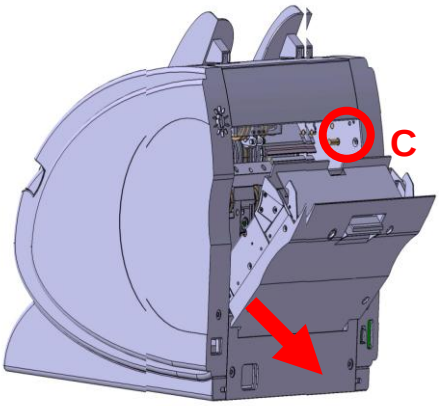

Open the rear cover and loosen the screw C.

4

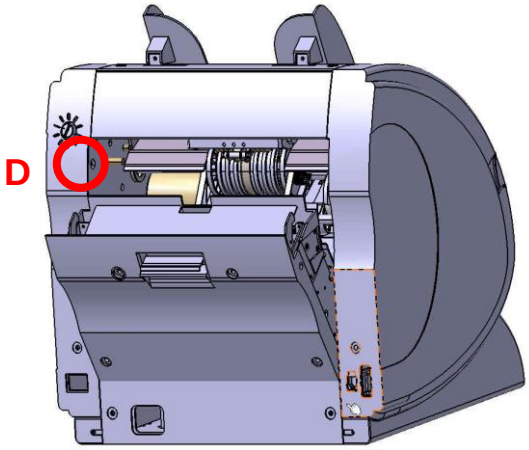

Loosen the screw D.

5

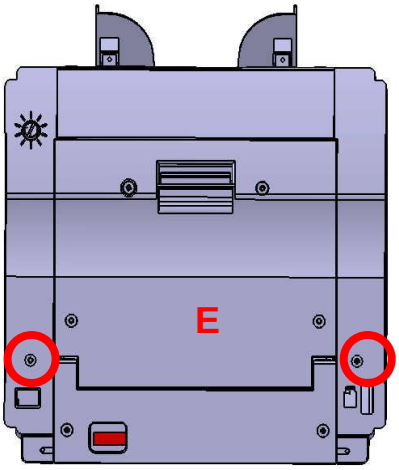

Loosen the screw E and remove the left and right side cover from the machine.

6

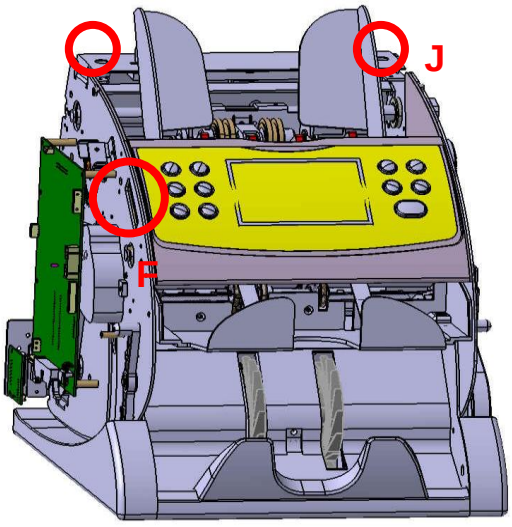

Disconnect the harness F and loosen the screw J and remove the HOPPER GUIDE COVER.

7

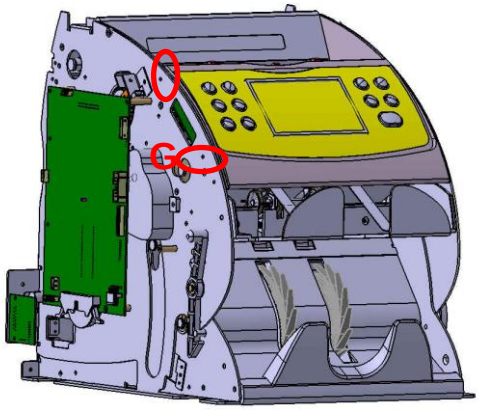

Loosen the screw G.

8

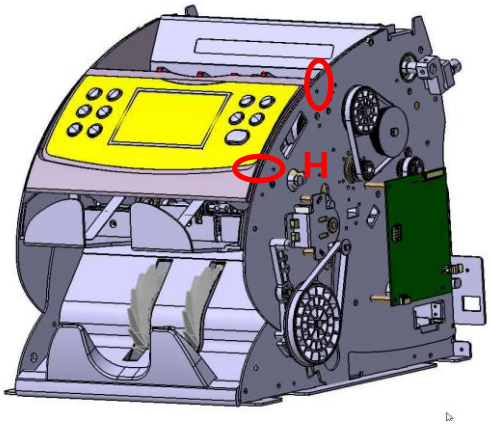

Loosen the screw H.

9

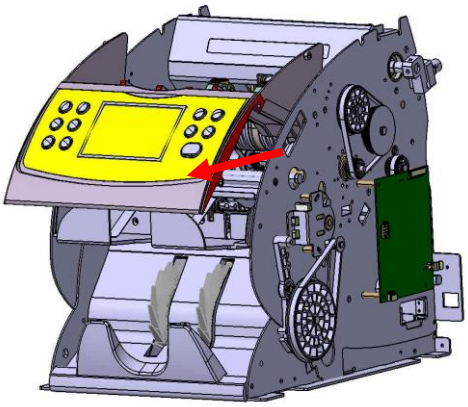

Remove the DISPLAY assembly to arrow.

10

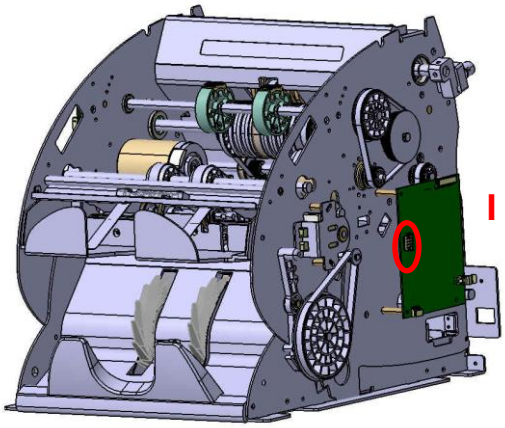

Disconnect the harness I and cut the cable tie of the motor harness.

11

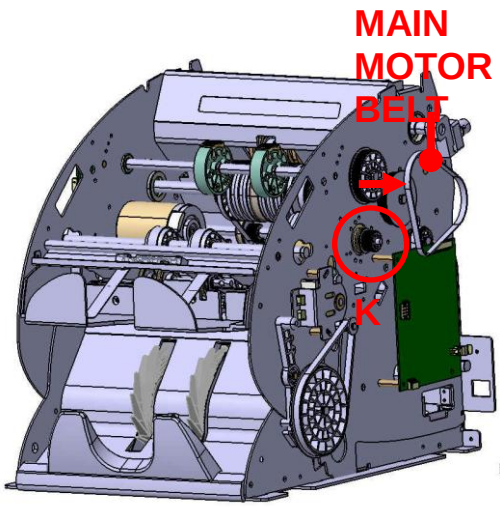

Pull the MAIN MOTOR BELT to arrow and loosen the screw K(3 points).

12

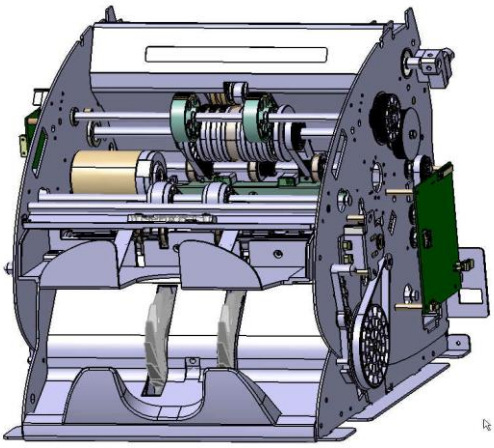

The MAIN MOTOR will be removed.
CAUTION!! Please adjust Kicker and Bite roller timing when assemble the MAIN MOTOR BELT.

7-14. SUB MOTOR DISASSEMBLY

1

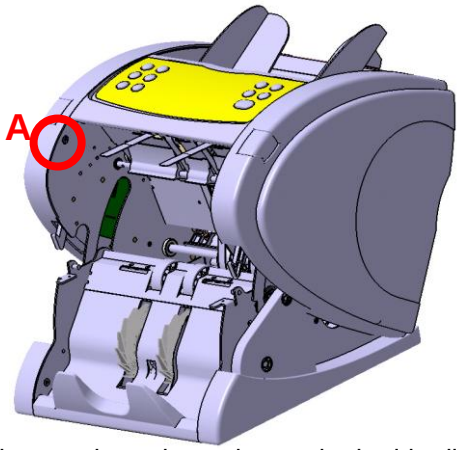

While pressing release button both side, lift up the front side of the machine.

2

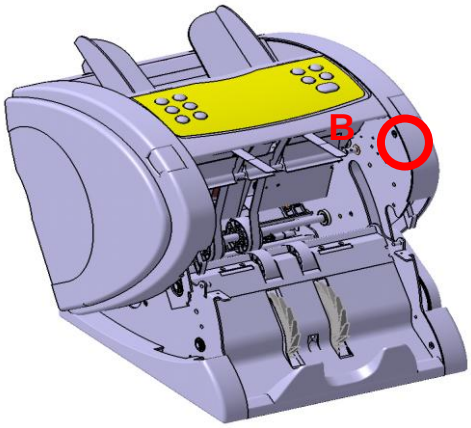

Loosen the screw A and B

3

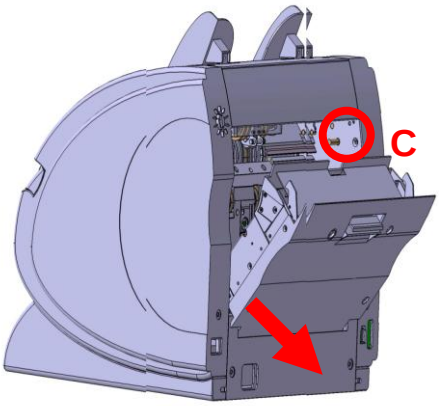

Open the rear cover and loosen the screw C.

4

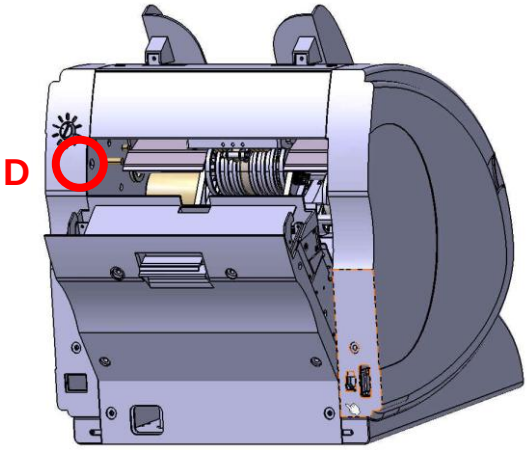

Loosen the screw D.

5

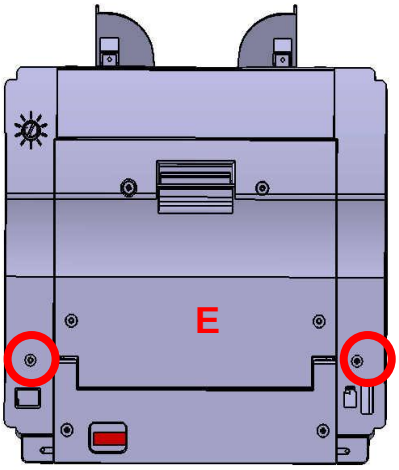

Loosen the screw E and remove the left and right side cover from the machine.

6

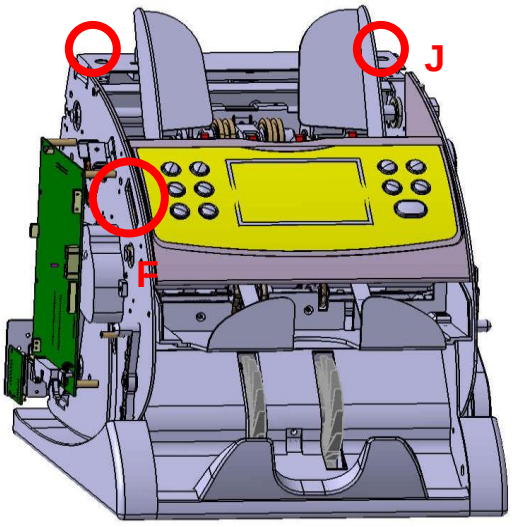

Disconnect the harness F and loosen the screw J and remove the HOPPER GUIDE COVER.

7

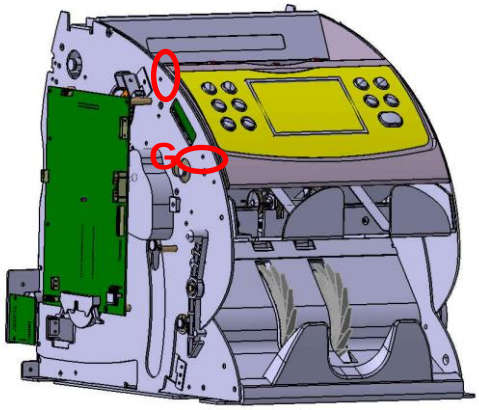

Loosen the screw G.

8

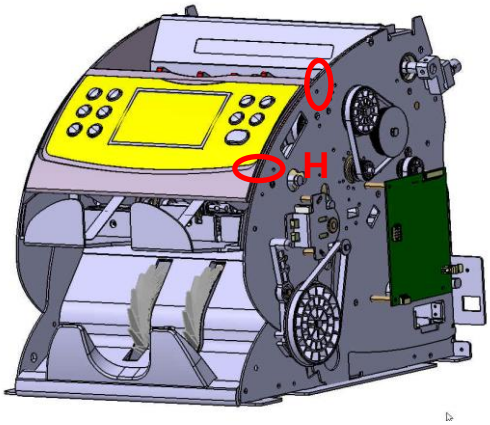

Loosen the screw H.

9

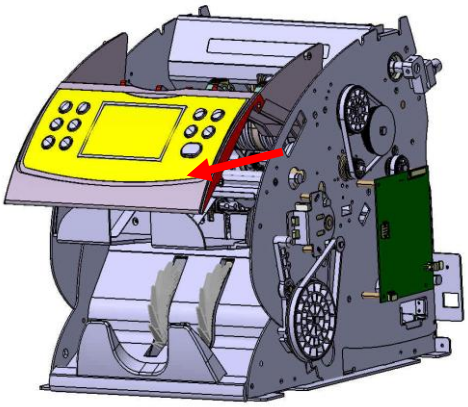

Remove the DISPLAY assembly to arrow.

10

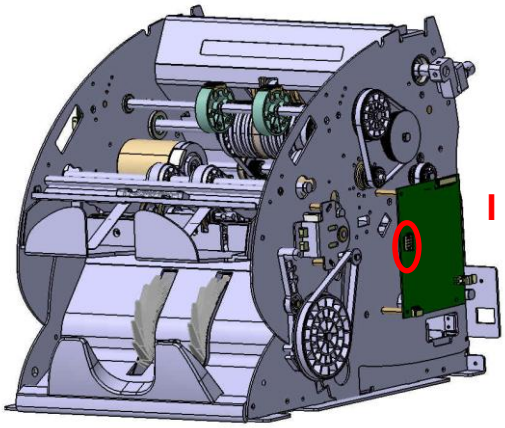

Disconnect the harness I and cut the cable tie of the motor harness.

11

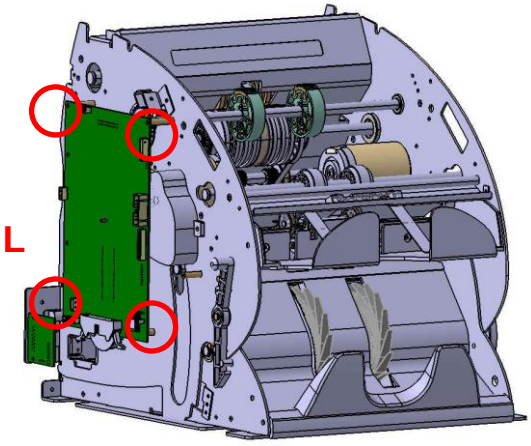

Disconnect the harness of the MAIN board and loosen the screw L.

12

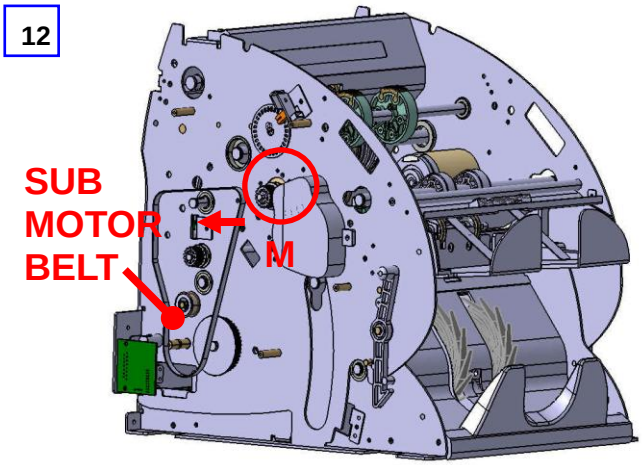

Pull the SUB MOTOR BELT to arrow and loosen the screw M(3 points).

7-15. SOLENOID DISASSEMBLY

1

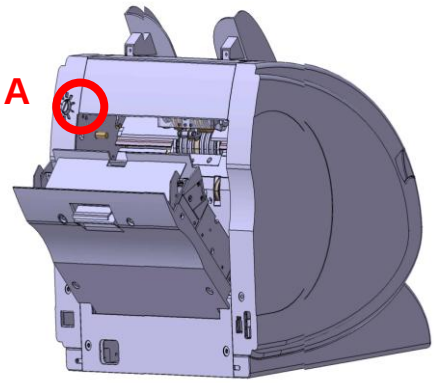

Open the rear cover and loosen the screw A.

2

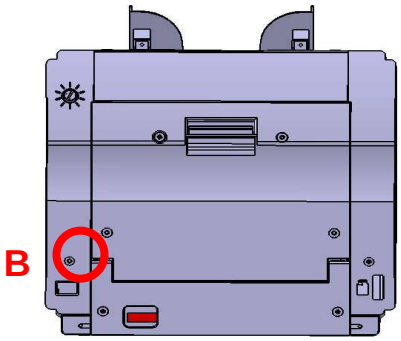

Loosen the screw B

3

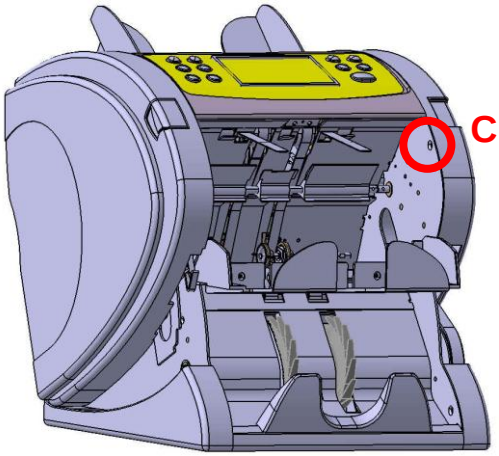

Open the front cover and loosen the screw C.

4

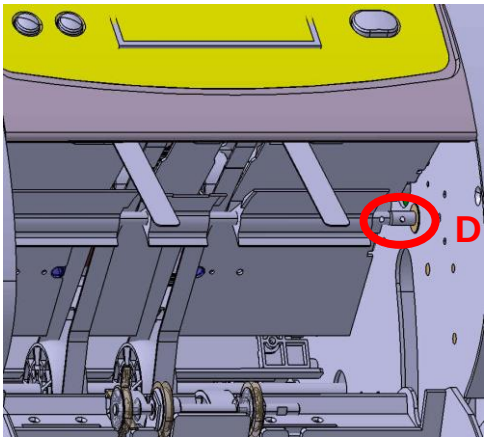

Loosen the screw D.

5

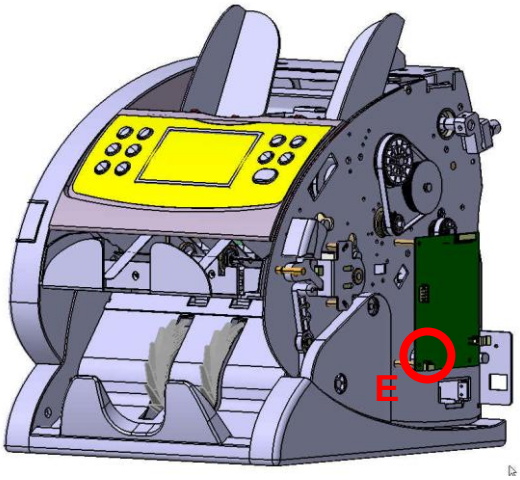

Remove the right side cover and disconnect the harness E.

6

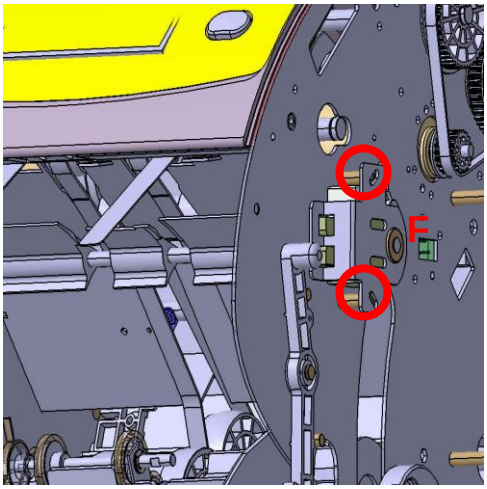

Loosen the screw E and remove the solenoid from the machine.
CAUTION!!
Please adjust position using sorting cam jig when assemble the SOLENOID.

7-16. KICKER ROLLER RUBBER DISASSEMBLY

1

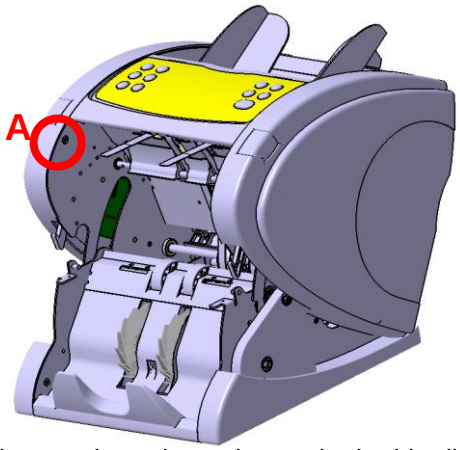

While pressing release button both side, lift up the front side of the machine.

2

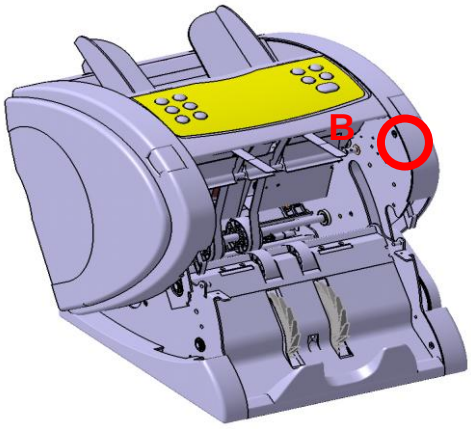

Loosen the screw A and B

3

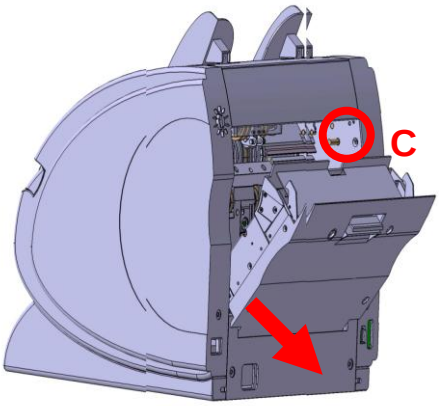

Open the rear cover and loosen the screw C.

4

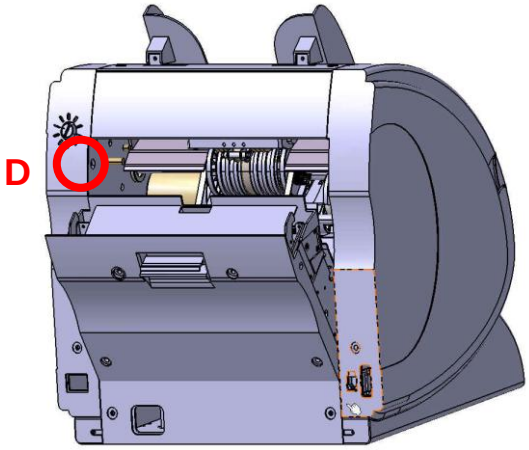

Loosen the screw D.

5

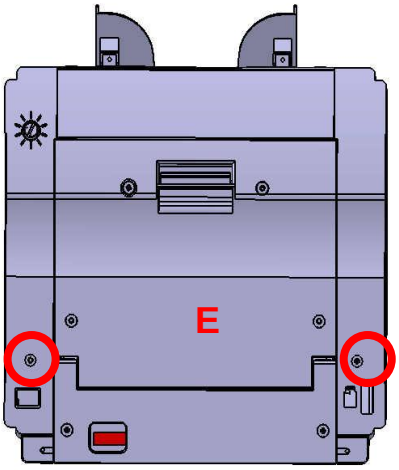

Loosen the screw E and remove the left and right side cover from the machine.

6

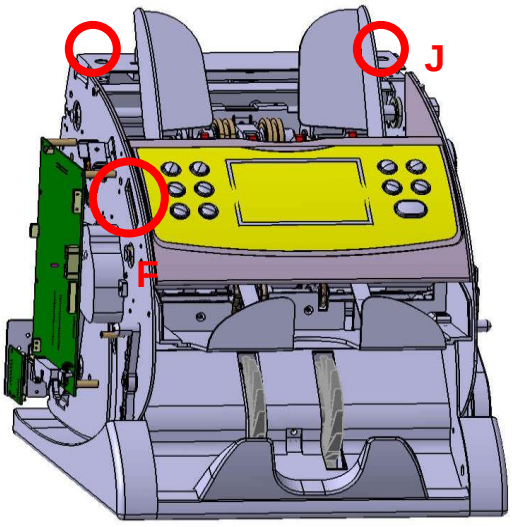

Disconnect the harness F and loosen the screw J and remove the HOPPER GUIDE COVER.

7

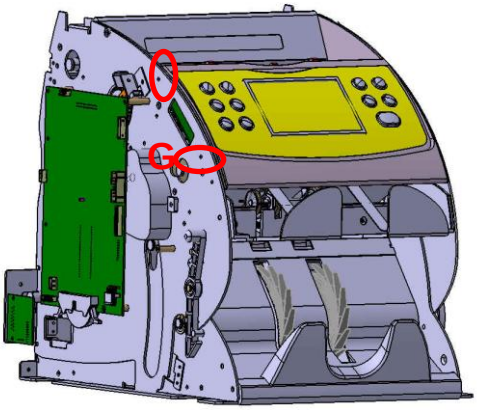

Loosen the screw G.

8

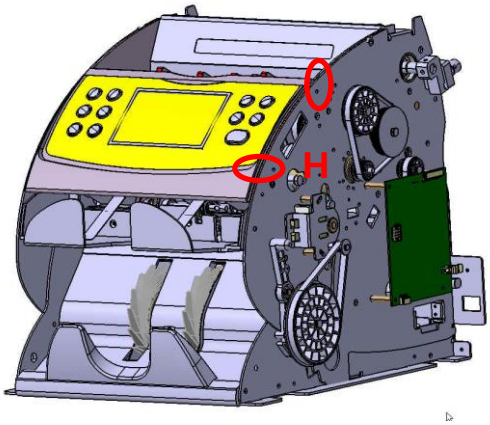

Loosen the screw H.

9

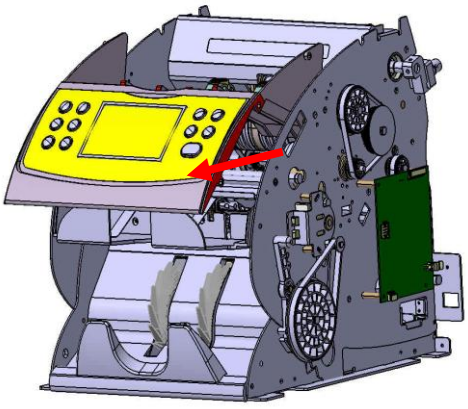

Remove the DISPLAY assembly to arrow.

10

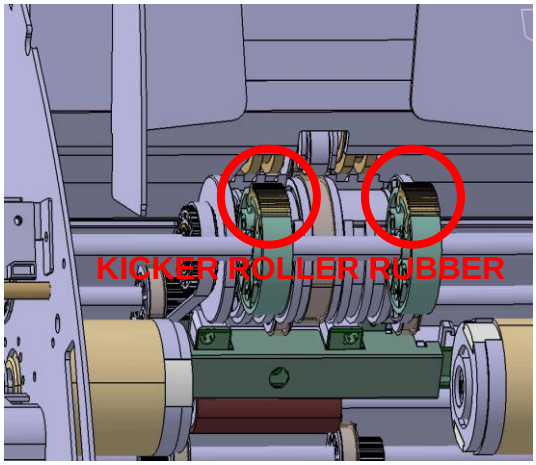

Turn the KICKER ROLLER and set to the RUBBER on top.

11

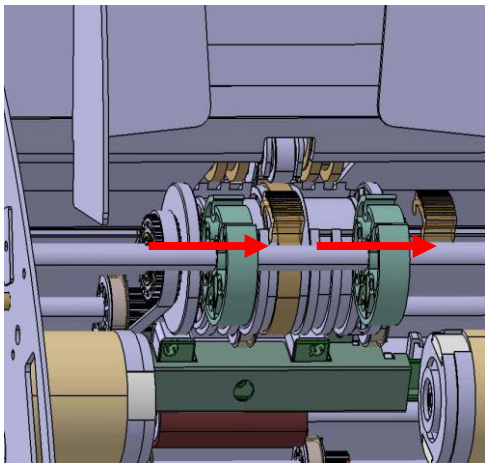

Pull the RUBBER to arrow.

7-17. BITE ROLLER ASSEMBLY DISASSEMBLY

1

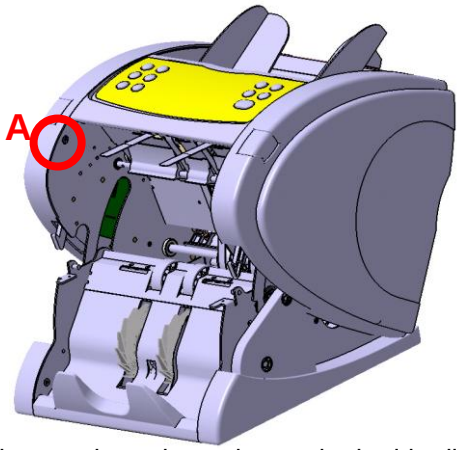

While pressing release button both side, lift up the front side of the machine.

2

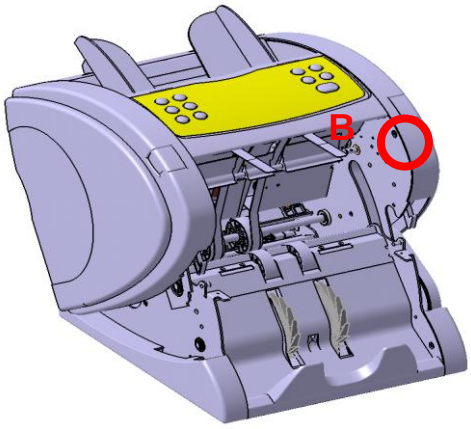

Loosen the screw A and B

3

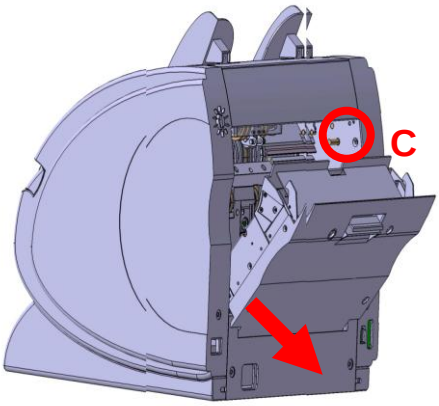

Open the rear cover and loosen the screw C.

4

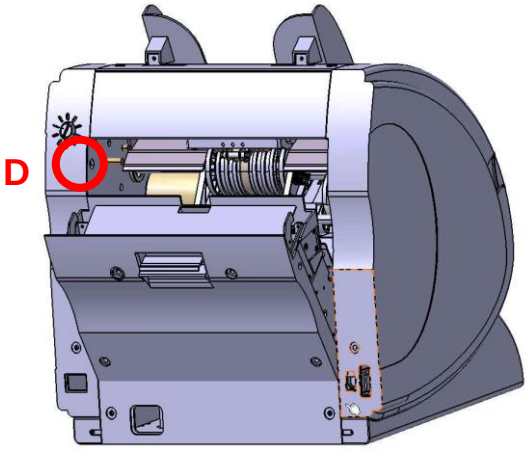

Loosen the screw D.

5

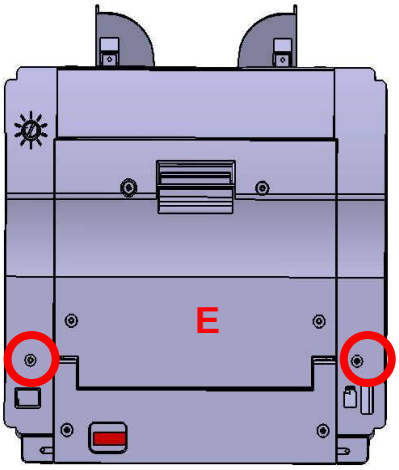

Loosen the screw E and remove the left and right side cover from the machine.

6

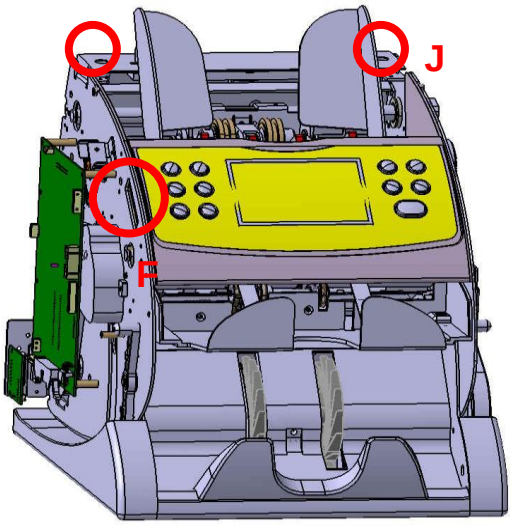

Disconnect the harness F and loosen the screw J and remove the HOPPER GUIDE COVER.

7

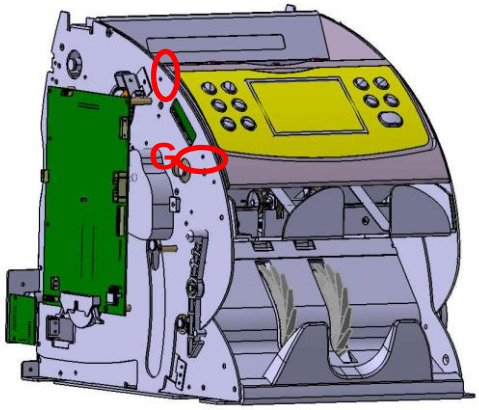

Loosen the screw G.

8

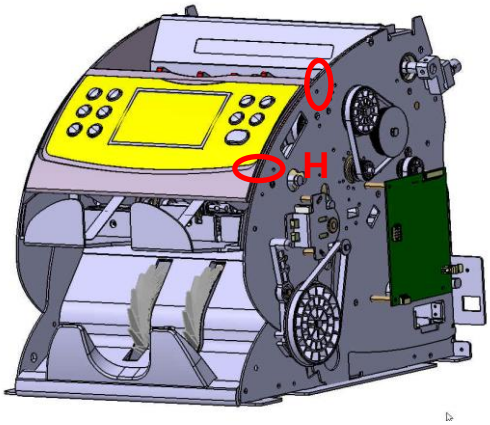

Loosen the screw H.

9

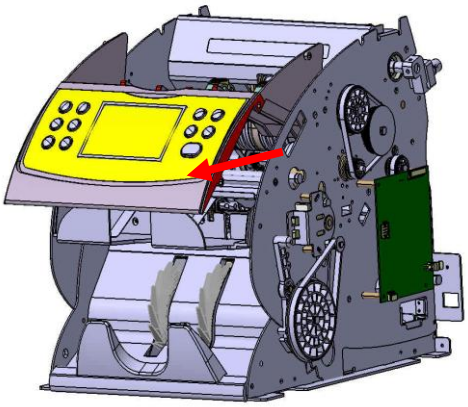

Remove the DISPLAY assembly to arrow.

10

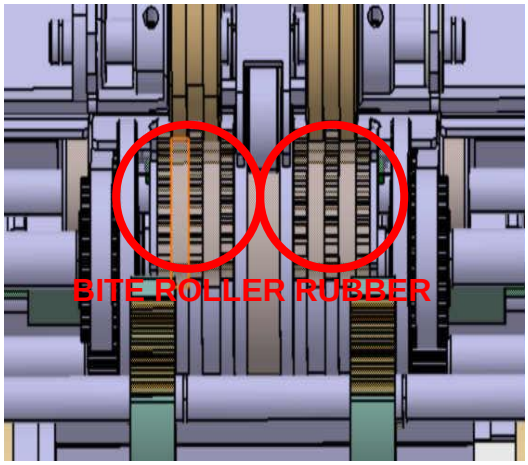

Turn the KICKER or BITE ROLLER and set to the RUBBER on top.

11

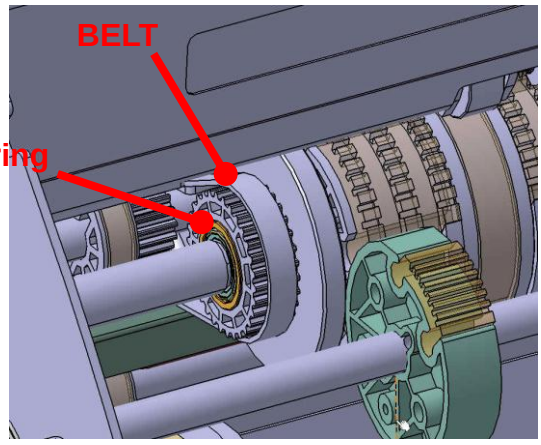

Pull out the E-ring and the belt.

16

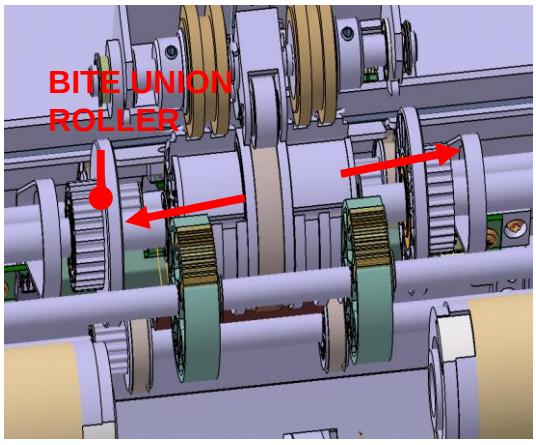

Pull the BITE UNION ROLLER and BITE ROLLER RUBBER to arrow.

7-18. SPLIT ROLLER ASSEMBLY DISASSEMBLY

1

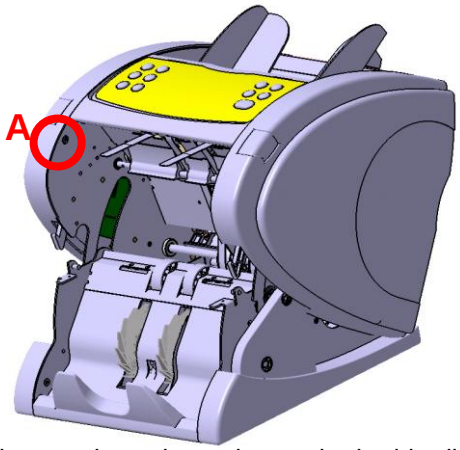

While pressing release button both side, lift up the front side of the machine.

2

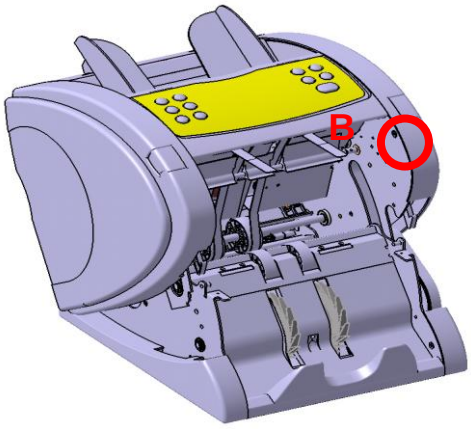

Loosen the screw A and B

3

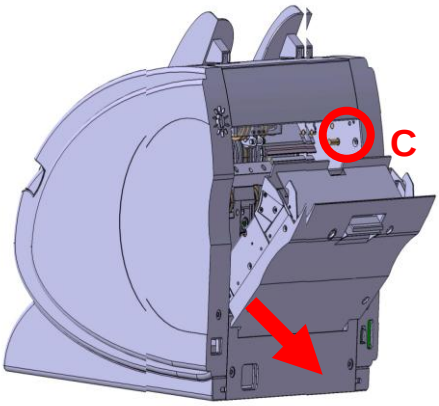

Open the rear cover and loosen the screw C.

4

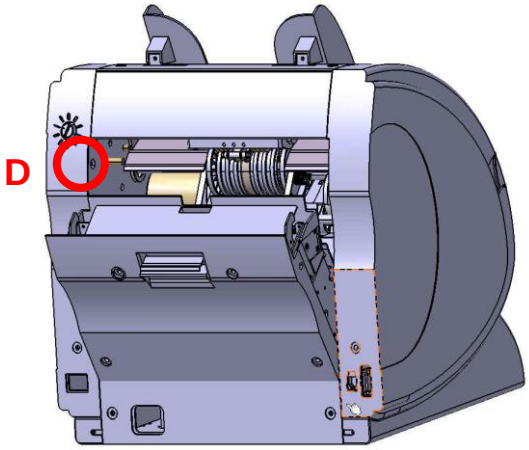

Loosen the screw D.

5

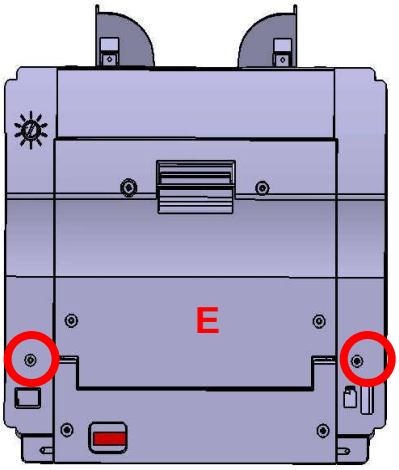

Loosen the screw E and remove the left and right side cover from the machine.

6

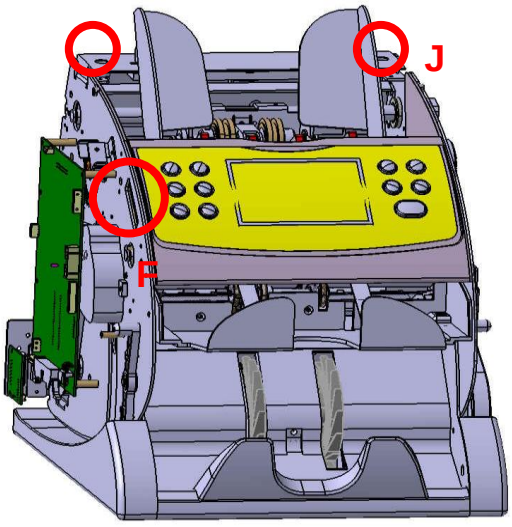

Disconnect the harness F and loosen the screw J and remove the HOPPER GUIDE COVER.

7

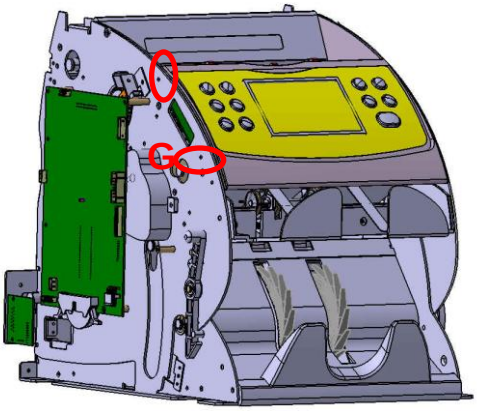

Loosen the screw G.

8

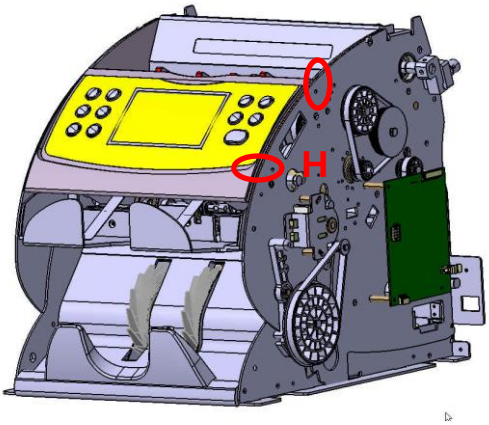

Loosen the screw H.

9

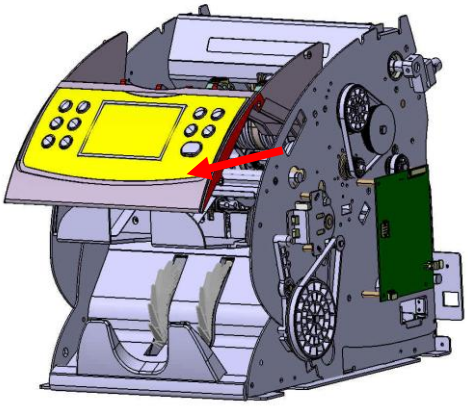

Remove the DISPLAY assembly to arrow.

10

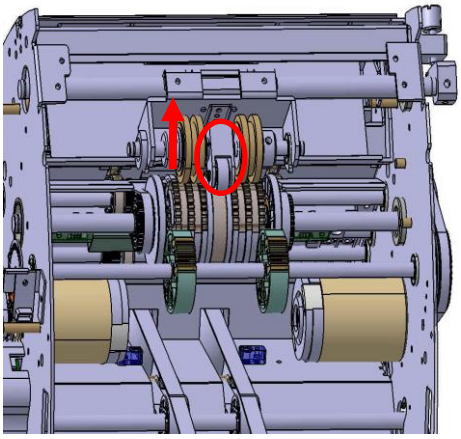

Lift up the SPLIT TILT ROLLER to arrow and remove it.

11

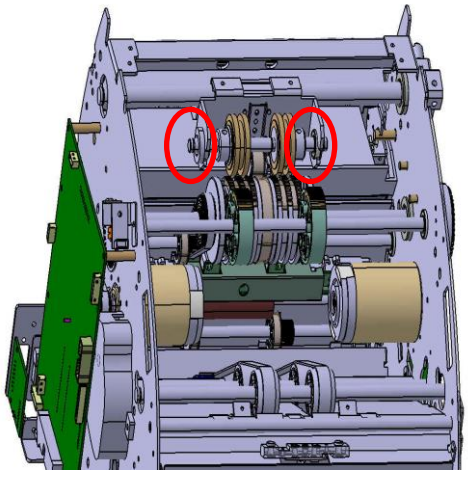

Pull out the E-ring and washers from the SPLIT ROLLER assembly.
CAUTION!!
Please adjust insert gap when assemble the SPLIT roller assembly.

7-19. REJECT SENSOR DISASSEMBLY

1

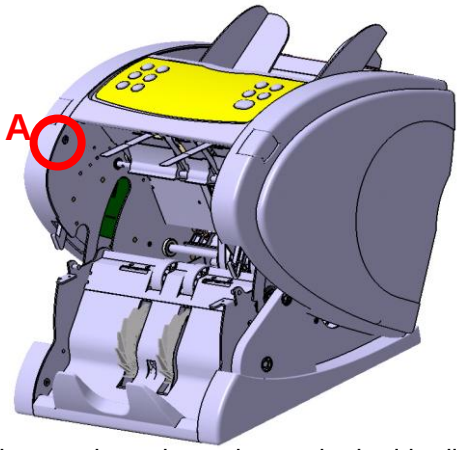

While pressing release button both side, lift up the front side of the machine.

2

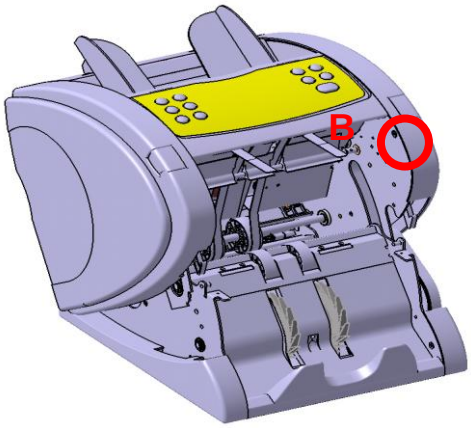

Loosen the screw A and B

3

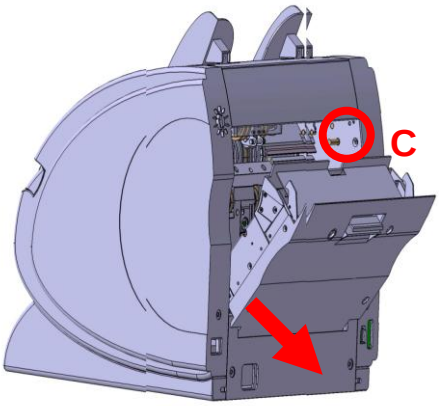

Open the rear cover and loosen the screw C.

4

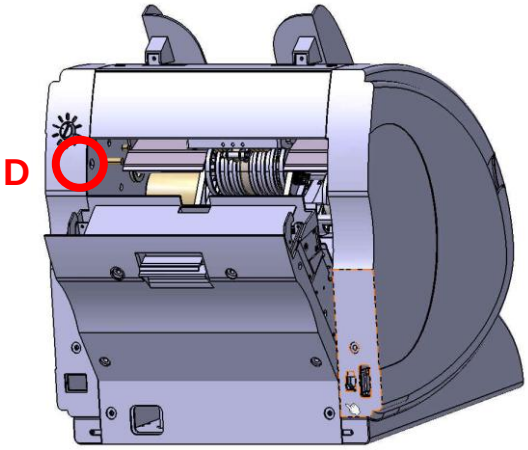

Loosen the screw D.

5

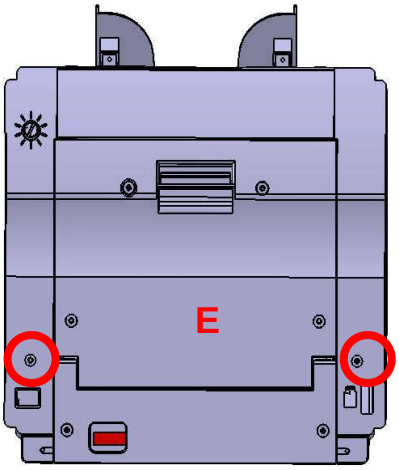

Loosen the screw E and remove the left and right side cover from the machine.

6

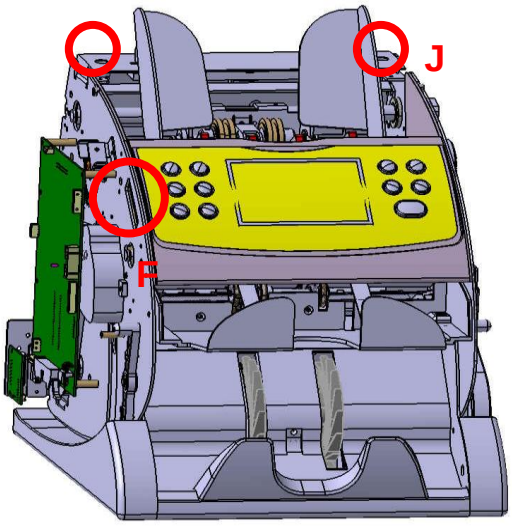

Disconnect the harness F and loosen the screw J and remove the HOPPER GUIDE COVER.

7

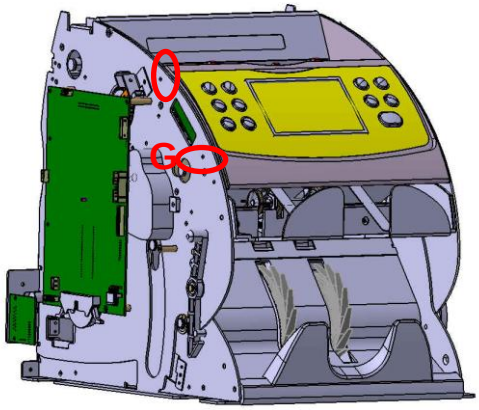

Loosen the screw G.

8

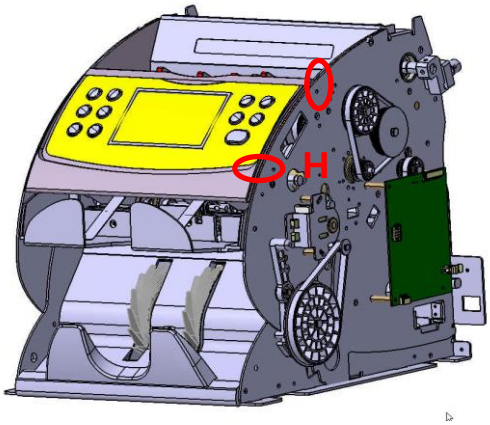

Loosen the screw H.

9

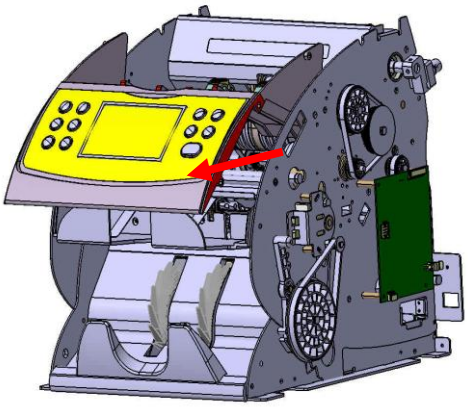

Remove the DISPLAY assembly to arrow.

10

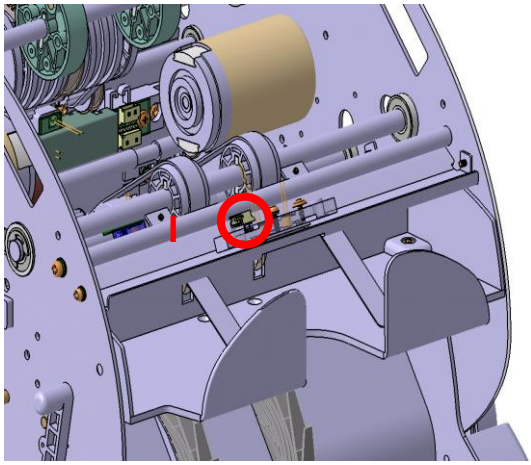

Disconnect the harness I.

11

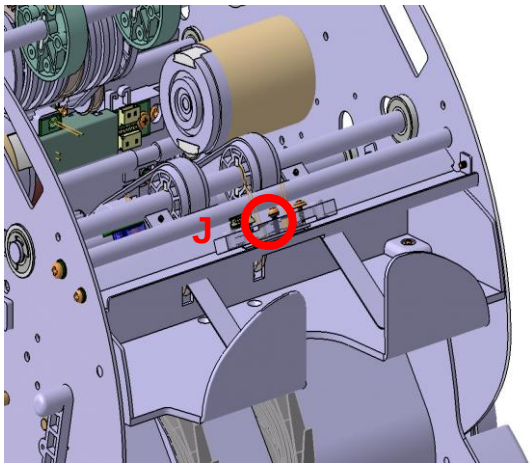

Loosen the screw J and remove the REJECT SENSOR assembly.

7-20. REJECT POCKET DISASSEMBLY

1

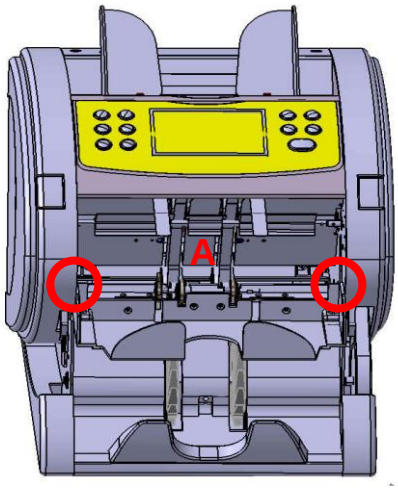

Loosen the screw A.

2

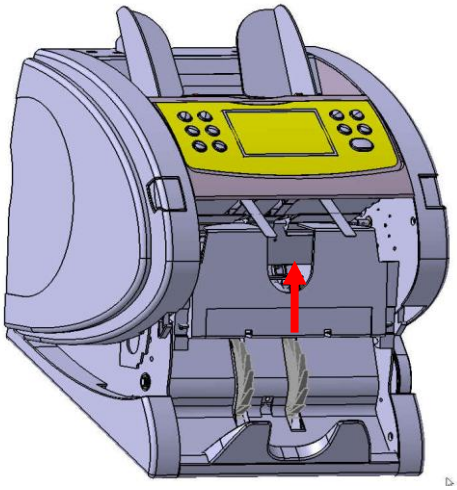

Lift up the front side of the REJECT POCKET.

3

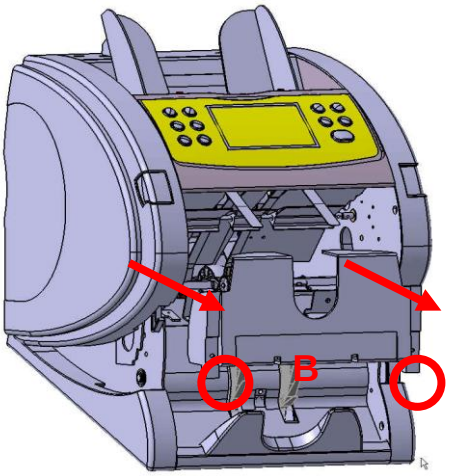

Hold the point B and remove the REJECT POCKET to arrow.

7-21. STACKER SENSOR DISASSEMBLY

1

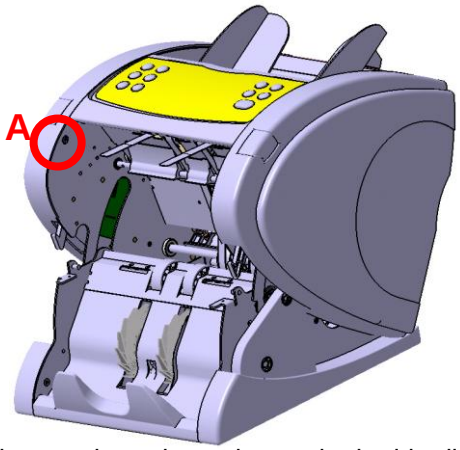

While pressing release button both side, lift up the front side of the machine.

2

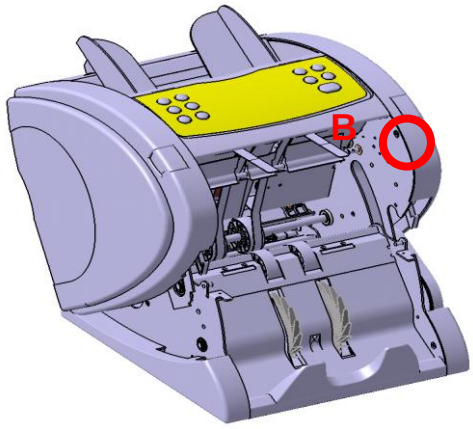

Loosen the screw A and B

3

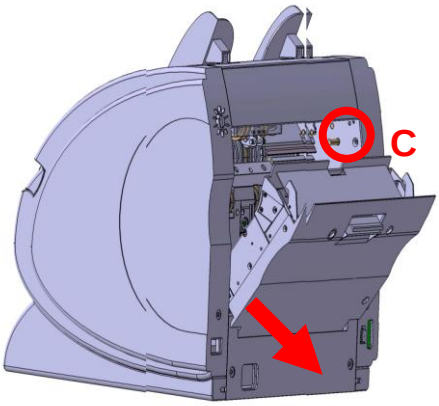

Open the rear cover and loosen the screw C.

4

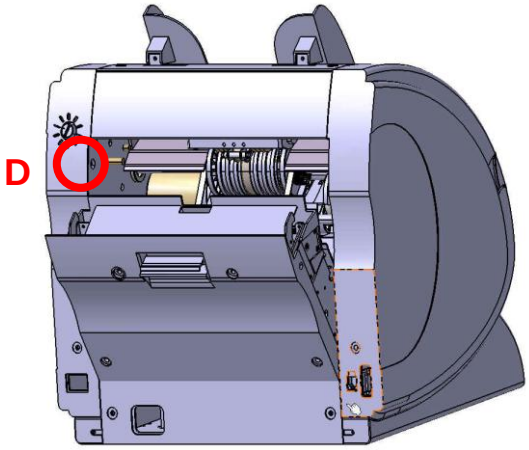

Loosen the screw D.

5

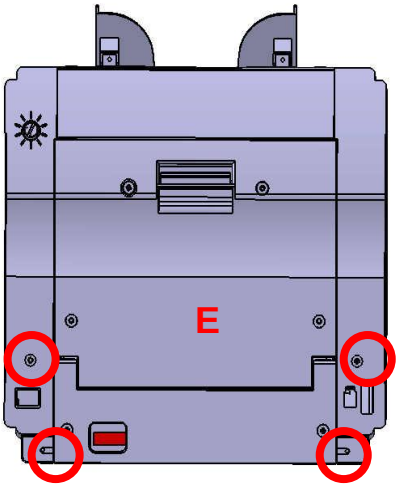

Loosen the screw E and remove the left and right side cover from the machine.

6

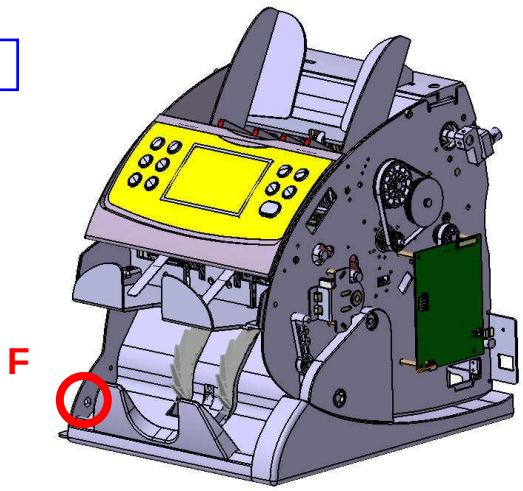

Loosen the screw F and remove the lower left side cover.

7

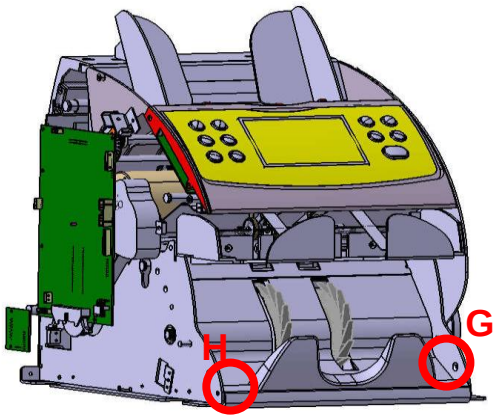

Loosen the screw G and remove the lower right side cover.

8

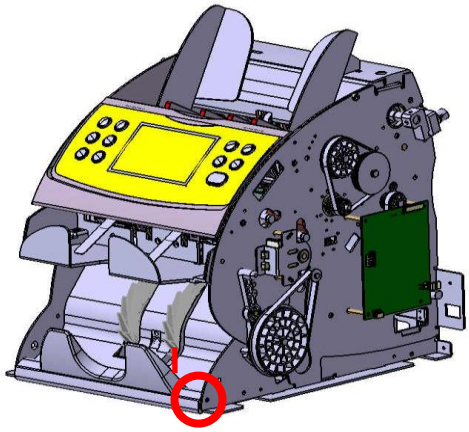

Loosen the screw H and I.

9

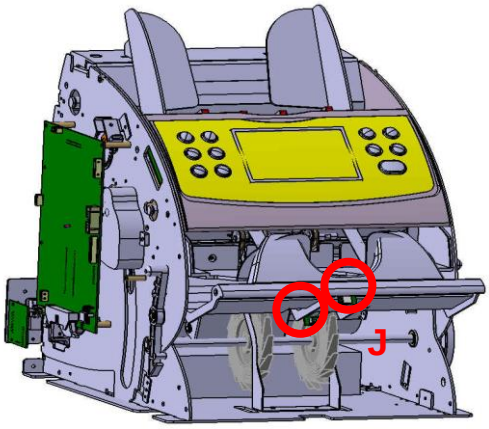

Lift up the STACKER COVER assembly and disconnect the harness J and cable tie.
CAUTION! The harness is very short!!

10

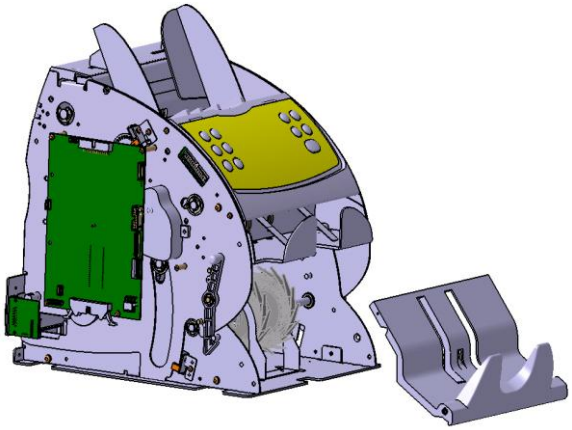

Remove the STACKER COVER.

11

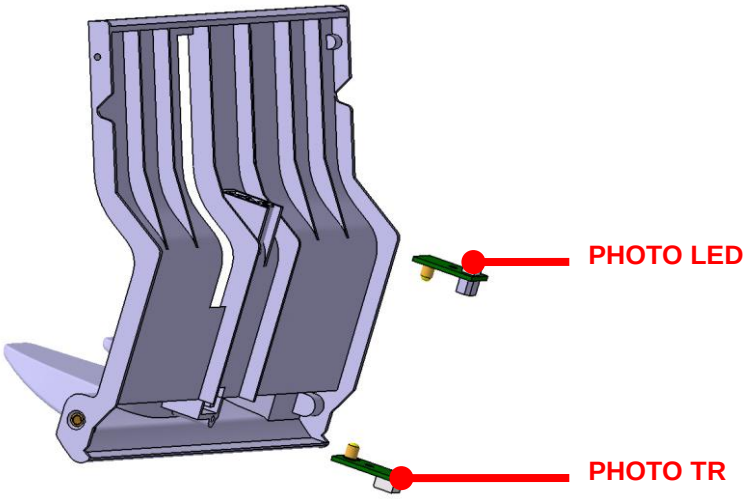

STACKER COVER assembly consists of two sensors and cover.

7-22. REAL TIME BOARD ASSEMBLY

1

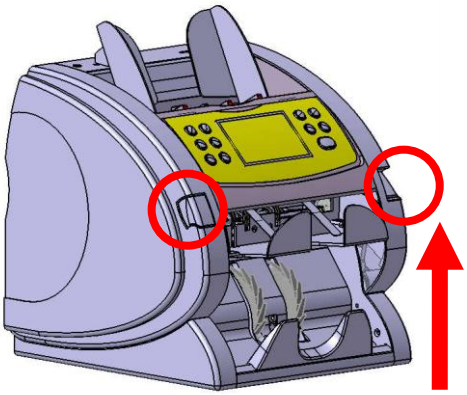

While pressing release button both side, lift up the front side of the machine.

2

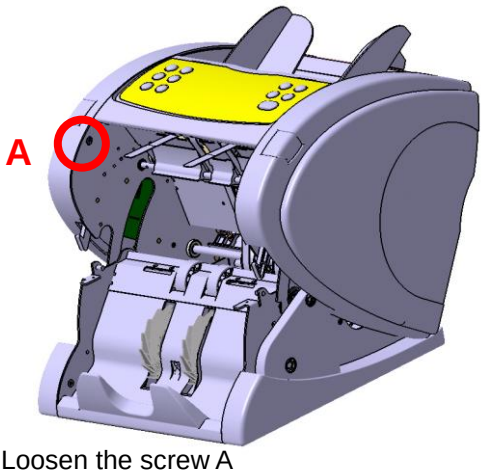

Loosen the screw A

3

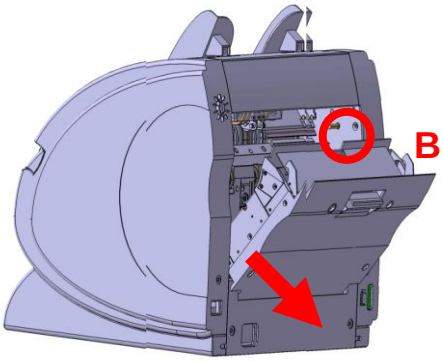

Open the rear cover and loosen the screw B.

4

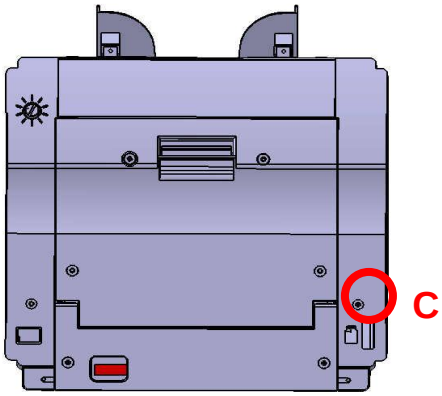

Loosen the screw C

5

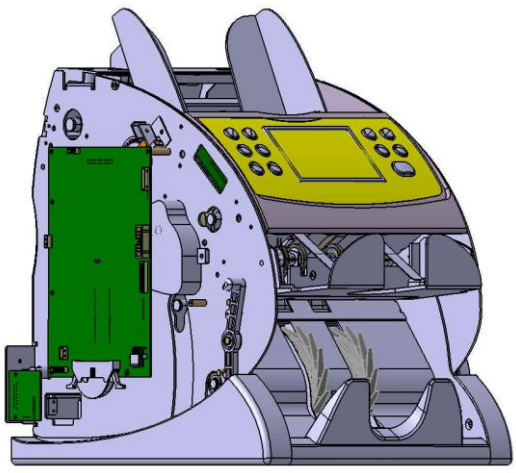

Remove the left side cover.

6

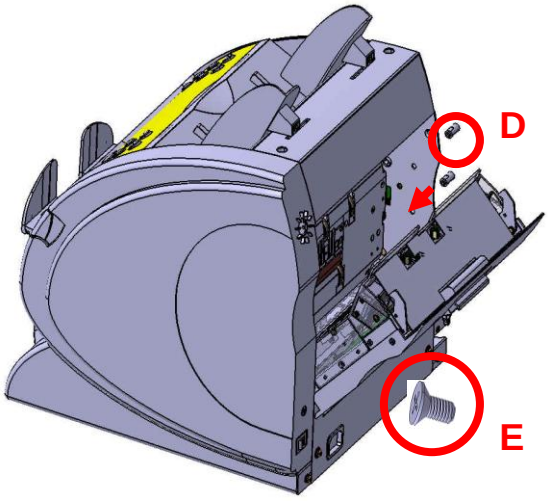

Open the rear cover and tighten the real time board mount D using the flat head screw E.(M3X8,2 points)

7

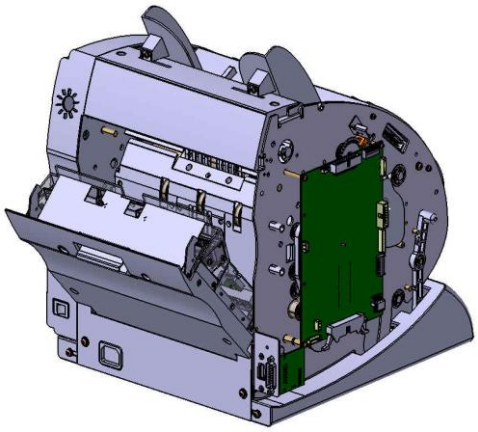

8

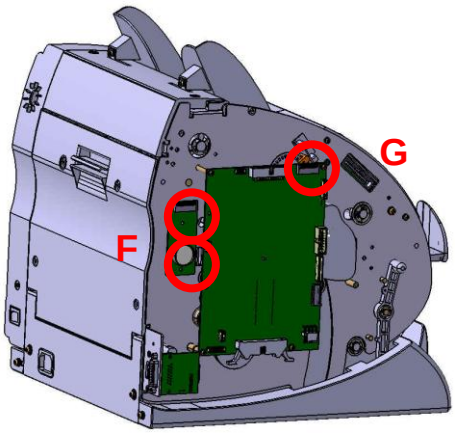

Assemble the Real time board and tighten the screw F and connect the harness G.

9

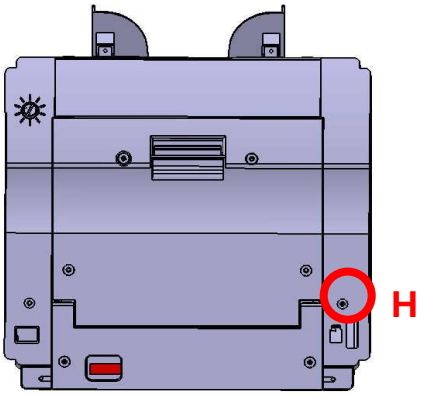

Assemble the left side cover and tighten the screw H.

10

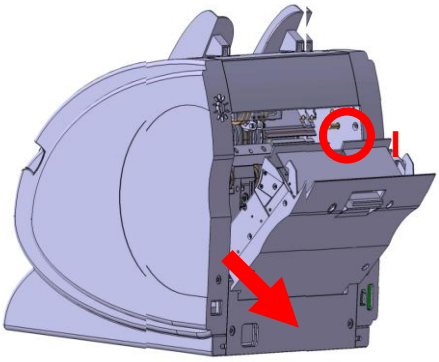

Open the rear cover and tighten the screw I.

11

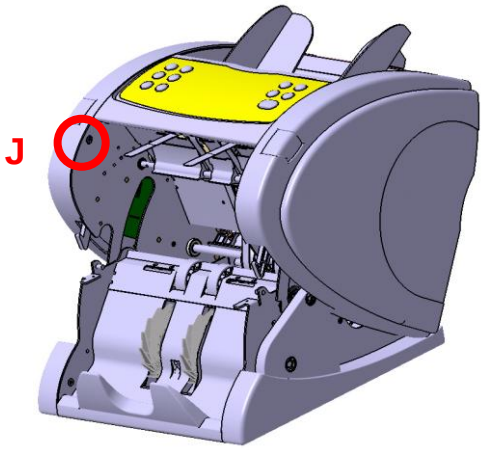

Lift up the front cover and tighten the screw J.

7-23. IR BOARD & IR CONNECTOR BOARD DISASSEMBLY

1

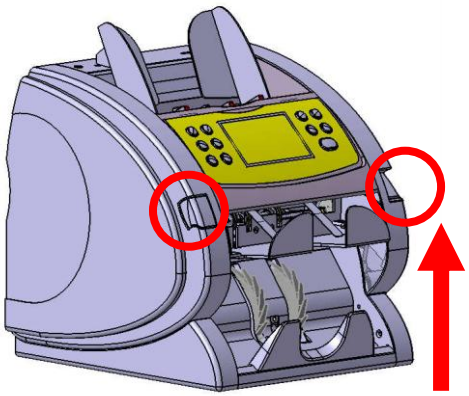

While pressing release button both side, lift up the front side of the machine.

2

Loosen the screw A

3

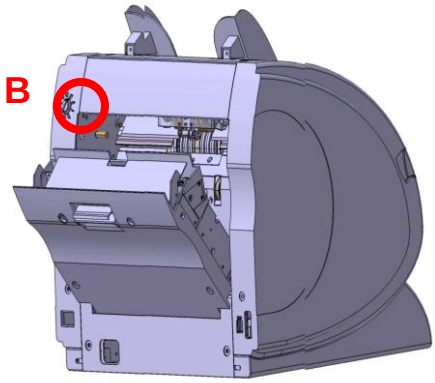

Open the rear cover and loosen the screw B.

4

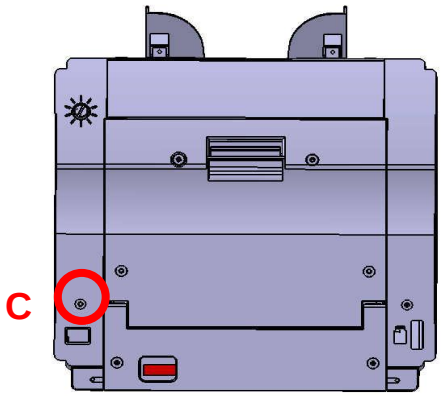

Loosen the screw C

5

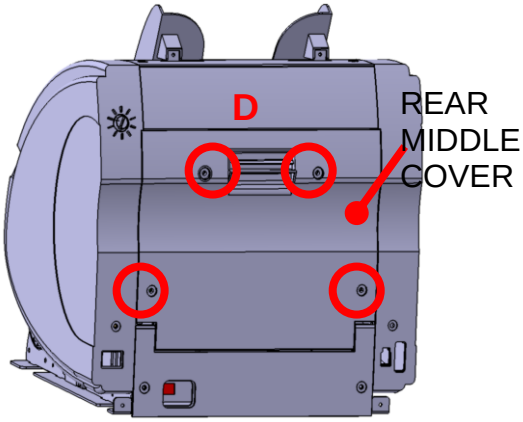

Loosen the screw A and open the REAR MIDDLE COVER.

6

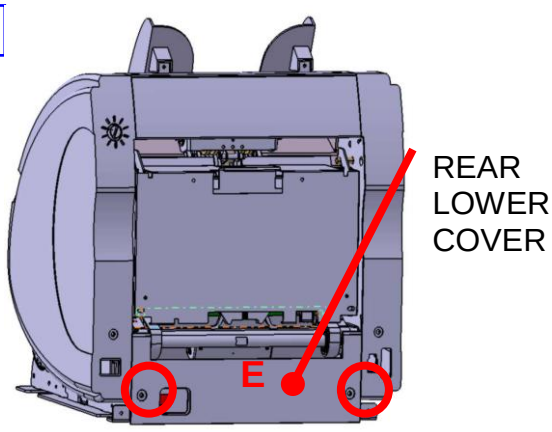

Loosen the screw B and open the REAR LOWER COVER.

7

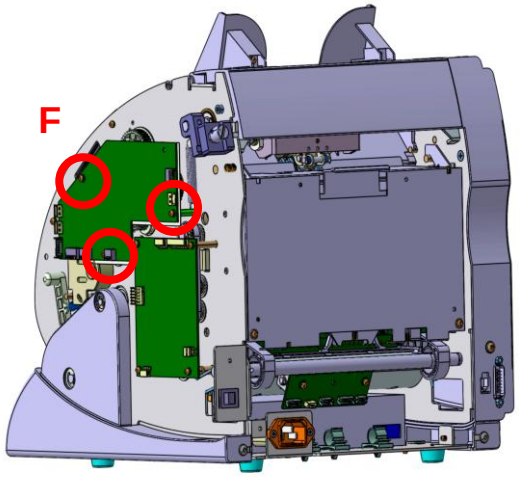

Disconnect the all harness from IR main board and loosen the screw F.

8

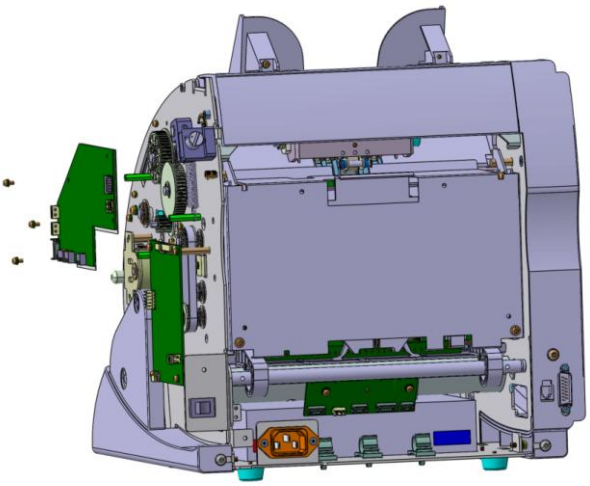

Remove IR main board from the machine.

9

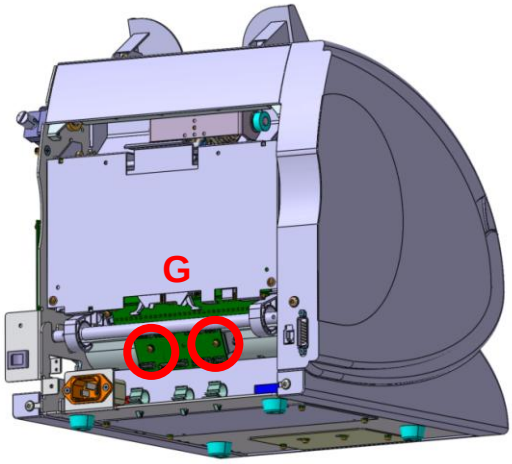

Disconnect the all harness from IR connector board and loosen the screw G.

10

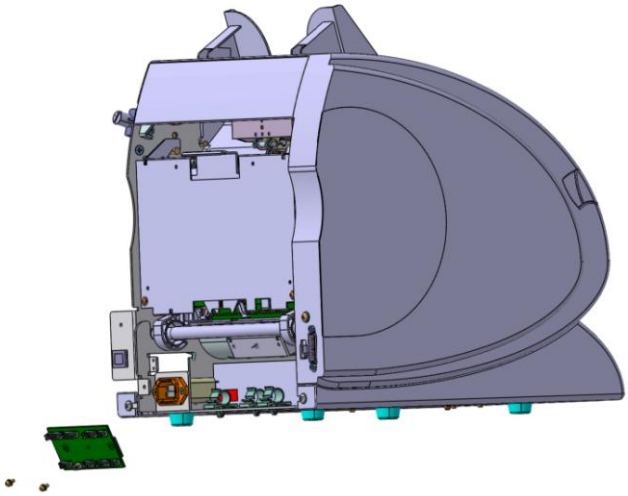

Remove IR connector board from the machine.

7-23. IR BOARD & IR CONNECTOR BOARD DISASSEMBLY

1

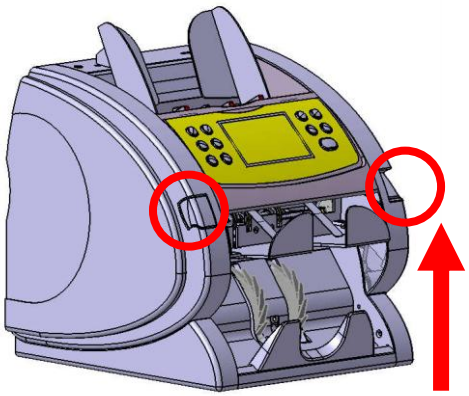

While pressing release button both side, lift up the front side of the machine.

2

Loosen the screw A

3

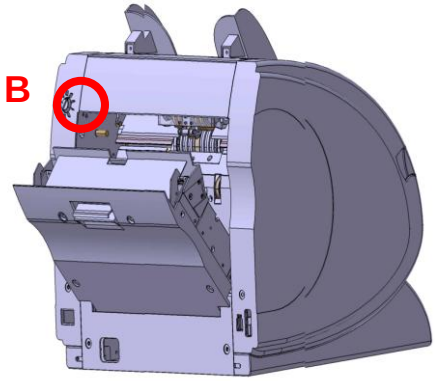

Open the rear cover and loosen the screw B.

4

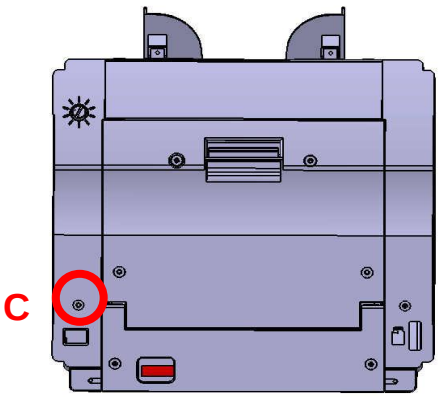

Loosen the screw C

5

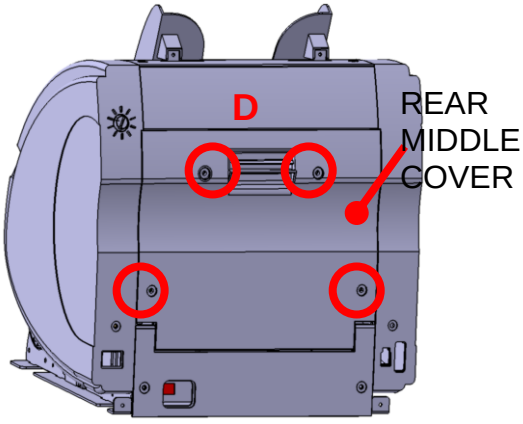

Loosen the screw A and open the REAR MIDDLE COVER.

6

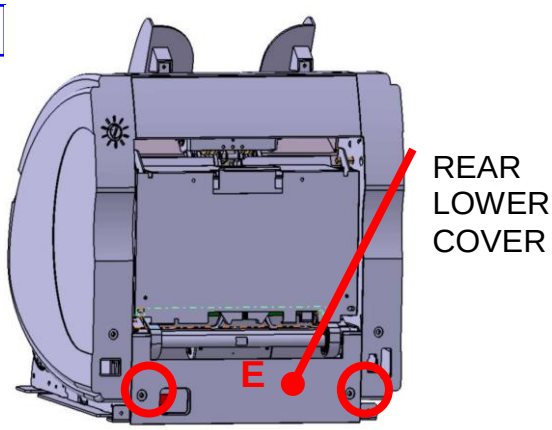

Loosen the screw B and open the REAR LOWER COVER.

7

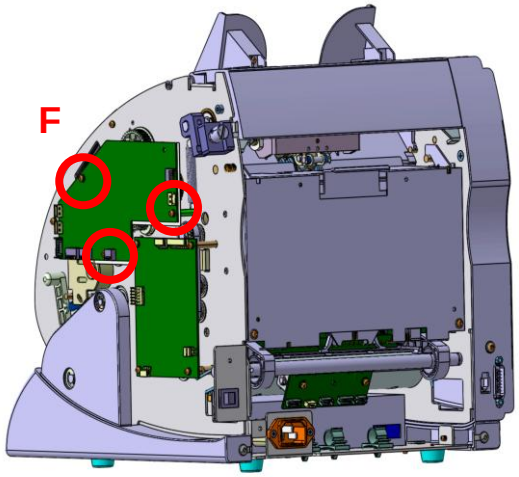

Disconnect the all harness from IR main board and loosen the screw F.

8

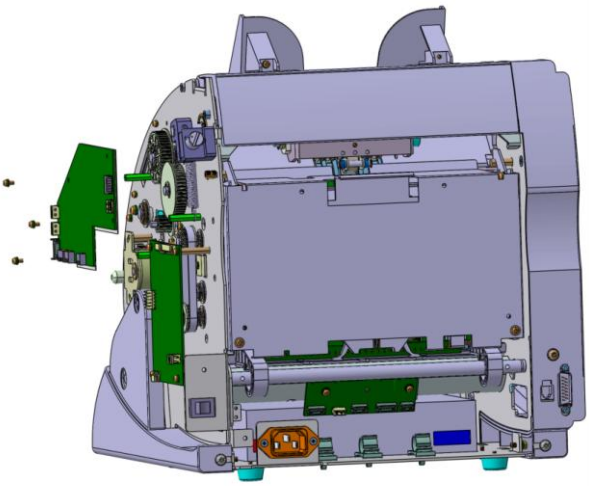

Remove IR main board from the machine.

9

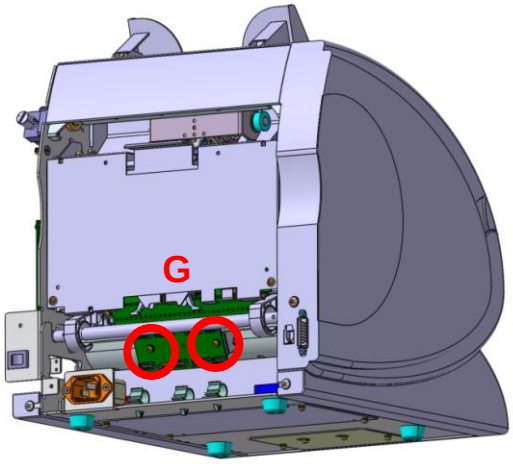

Disconnect the all harness from IR connector board and loosen the screw G.

10

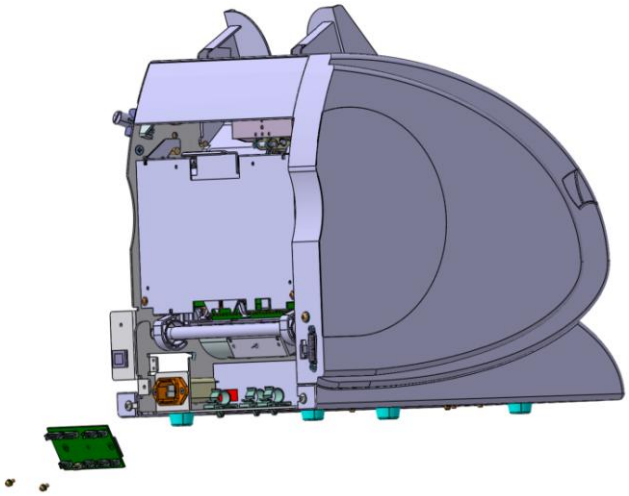

Remove IR connector board from the machine.

7-24. HOW TO ADD SPLIT GUIDE PLATE

To reduce Jam problem, we developed Split Guide Plate.

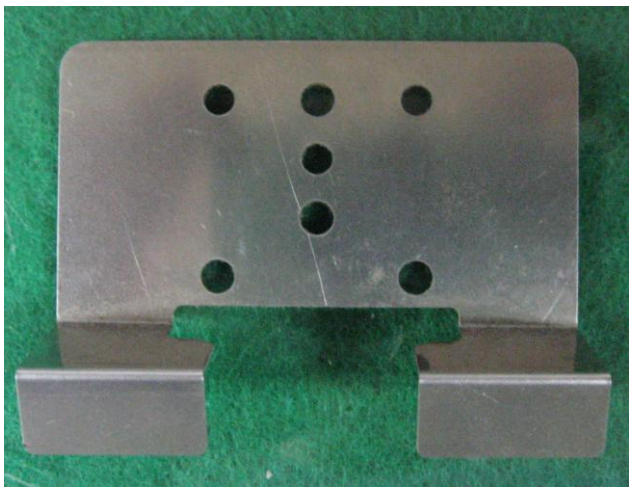

Split Guide Plate

If disassemble Hopper Guide Cover and Hopper Cover, you can add new part to machine.
Assembly process is as below.

1. Remove Hopper Guide Cover

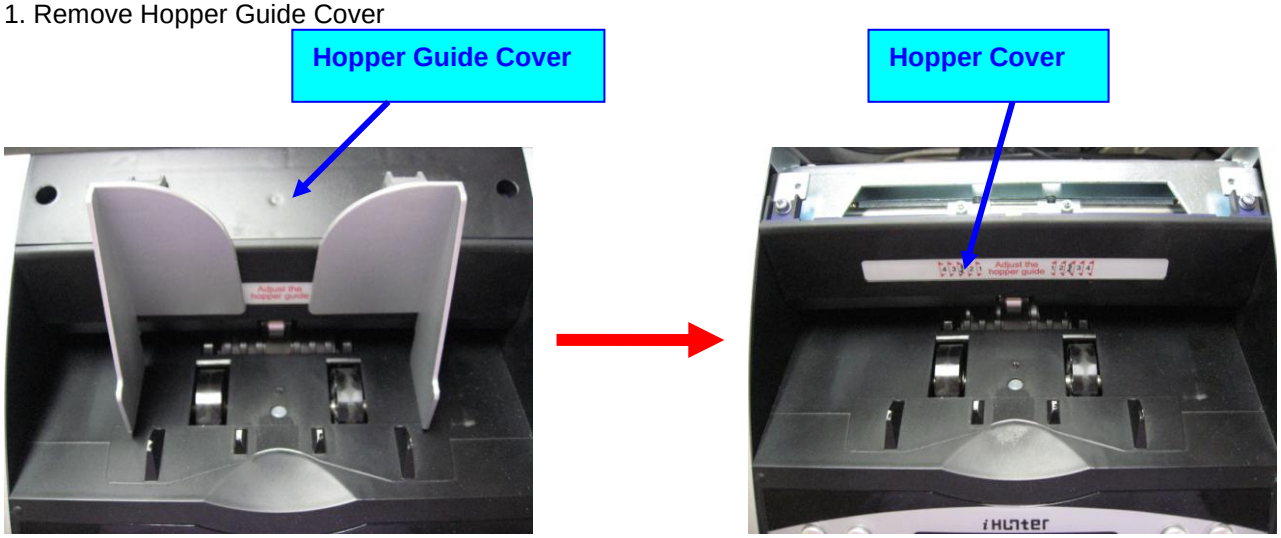

2. Remove Hopper Cover

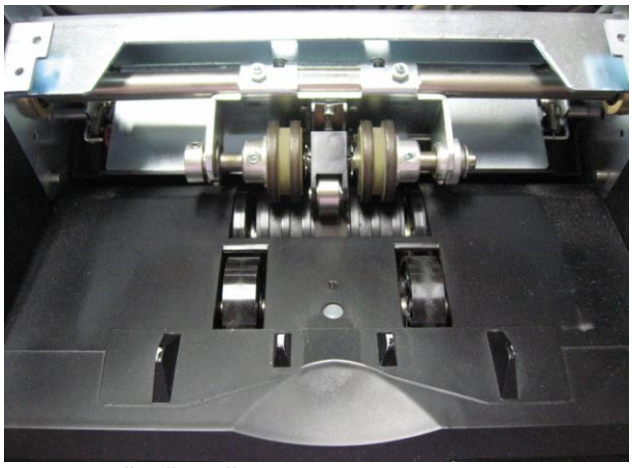

3. Remove Split Tilt Roller.

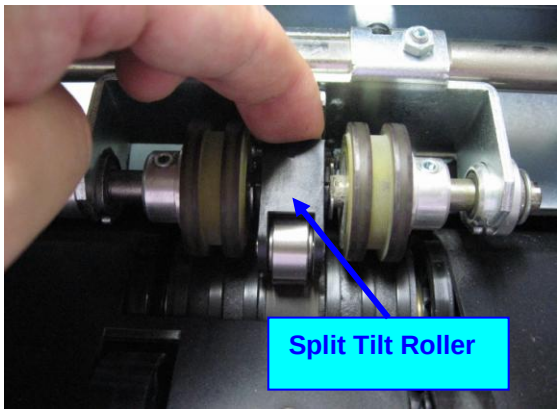

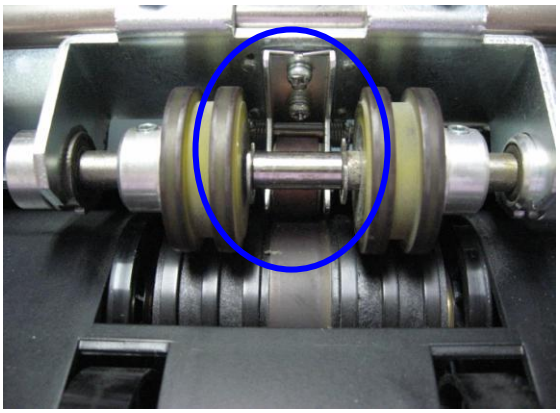

4. Remove Split Tension Roller Ass'y.

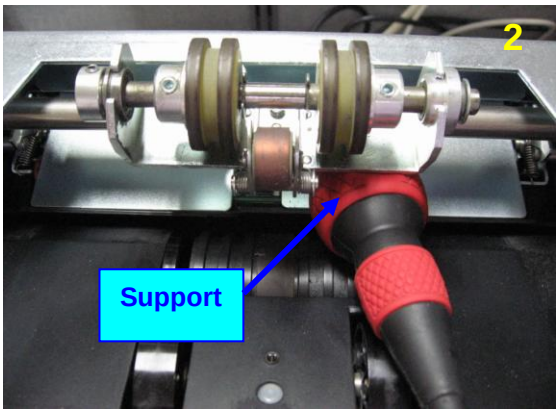

Lift up Split Roller and upkeep the state by using support.

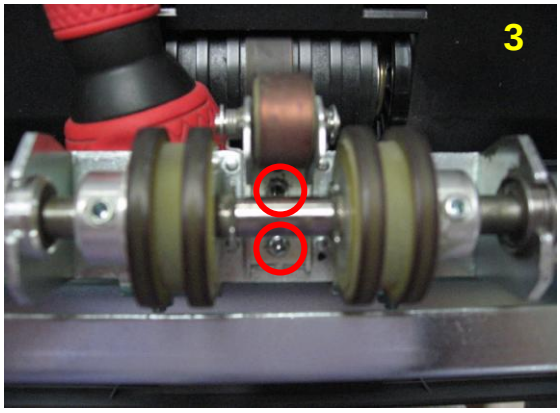

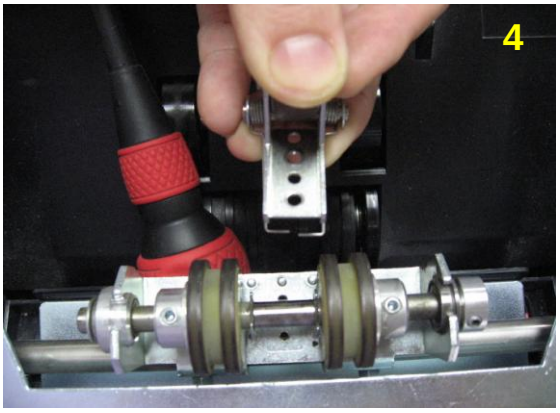

Remove two screws from Split Tension Roller Ass'y.

Remove Split Tension Roller Ass'y.

5. Put Split Guide Plate to Split Roller Bracket.

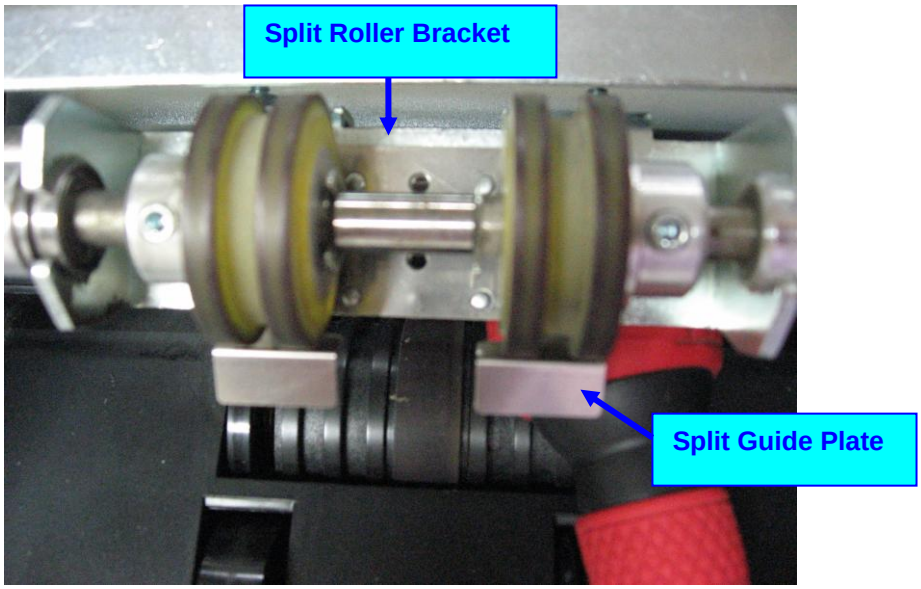

6. Put Split Tension Roller to Split Guide Plate.

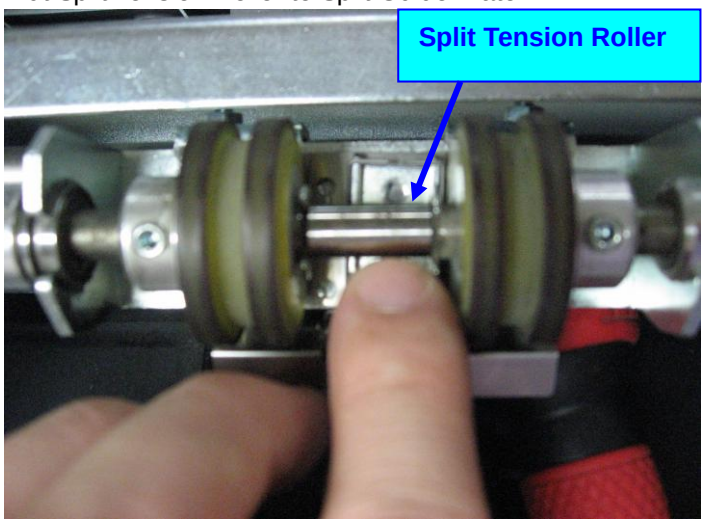

7. Fix Split Guide Plate and Split Tension Roller by tightening two screws.

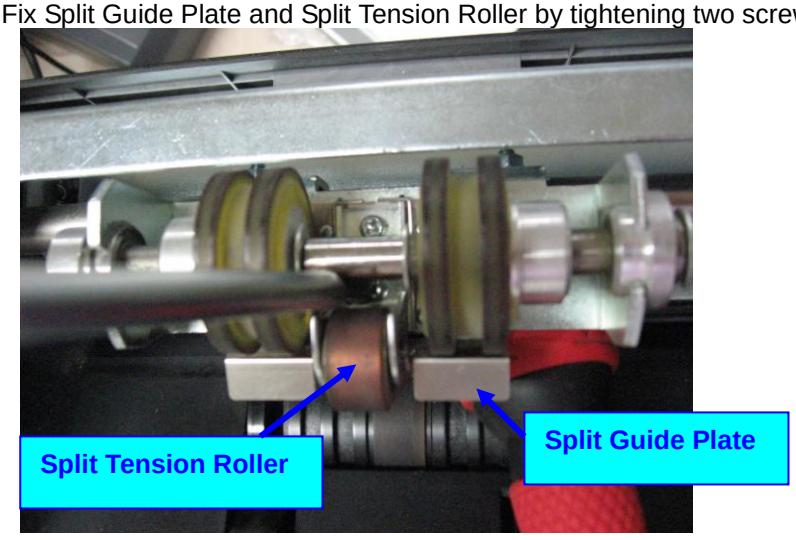

8. Remove Support and assemble Split Tilt Roller.

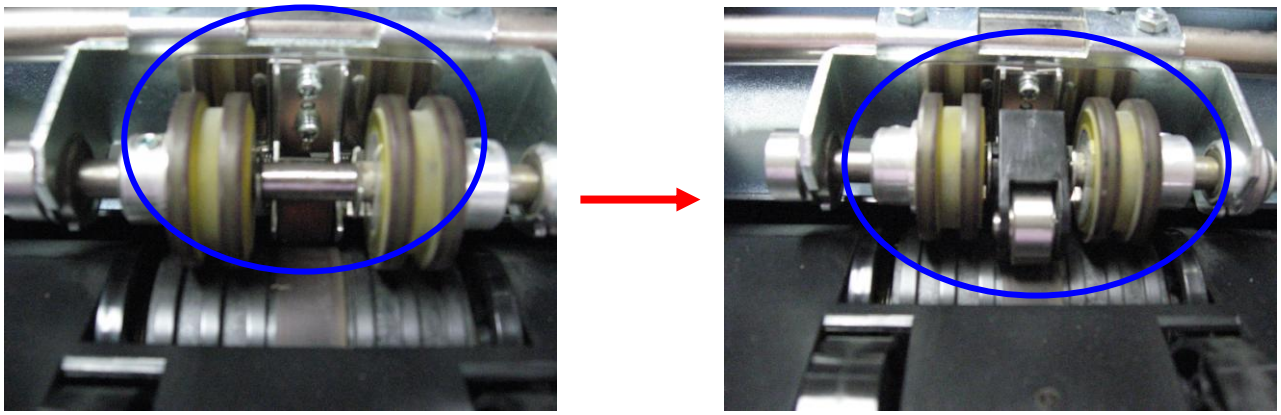

9. Assemble Hopper Cover and Hopper Guide Cover.

7-25. HOW TO ADD IR PLATE

IR Plate

1. Remove Detector Module from machine.

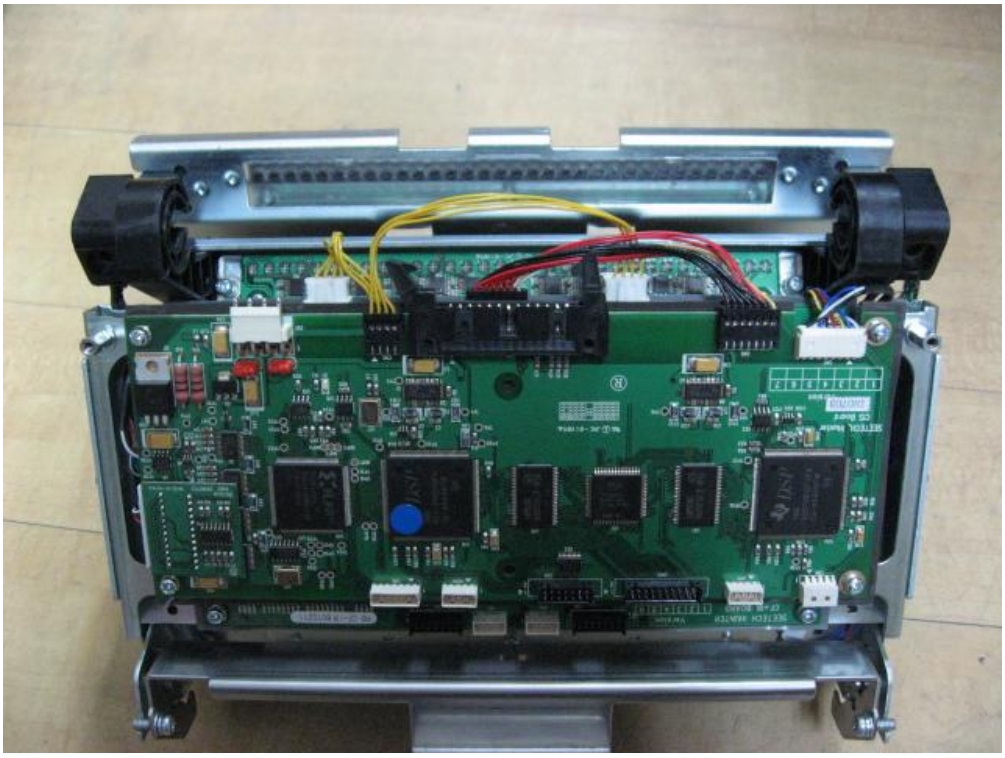

2. Take off IR Plate and attach IR Front Board referring to below picture.

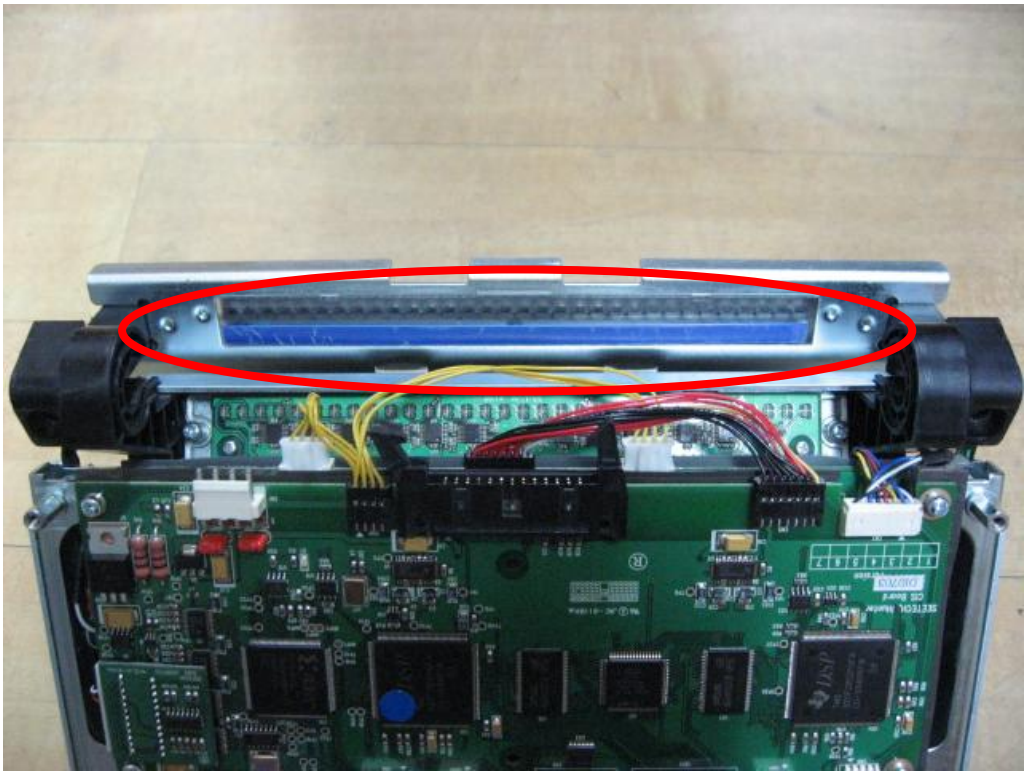

3. Remove a transparent vinyl from surface of IR Plate.

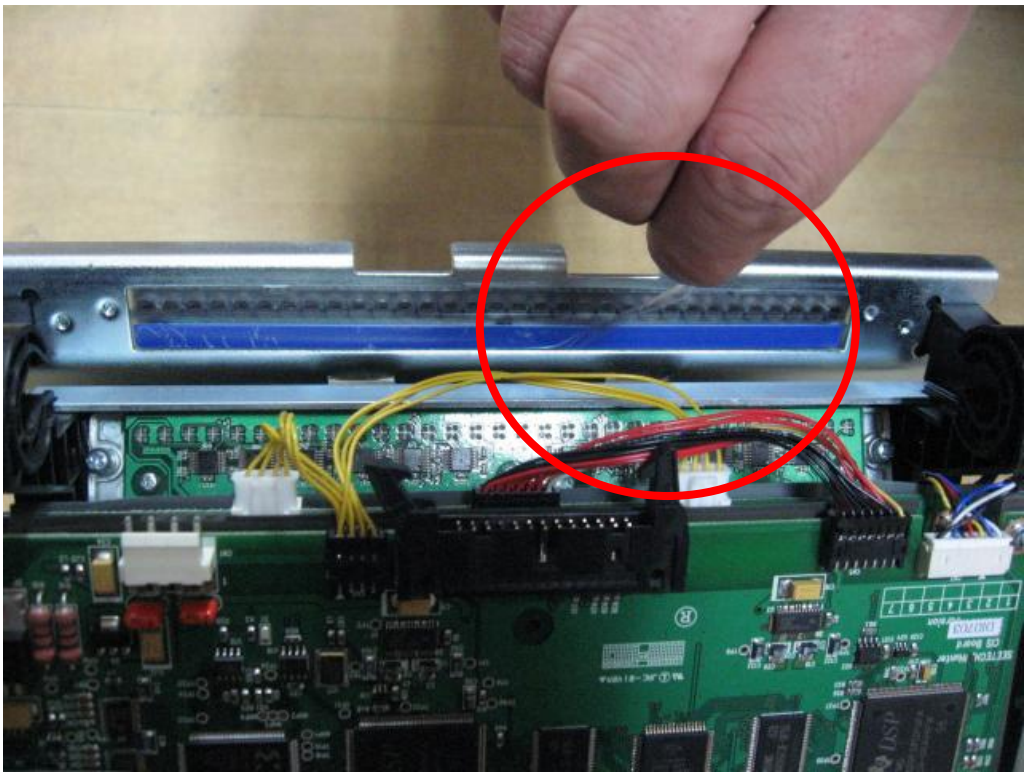

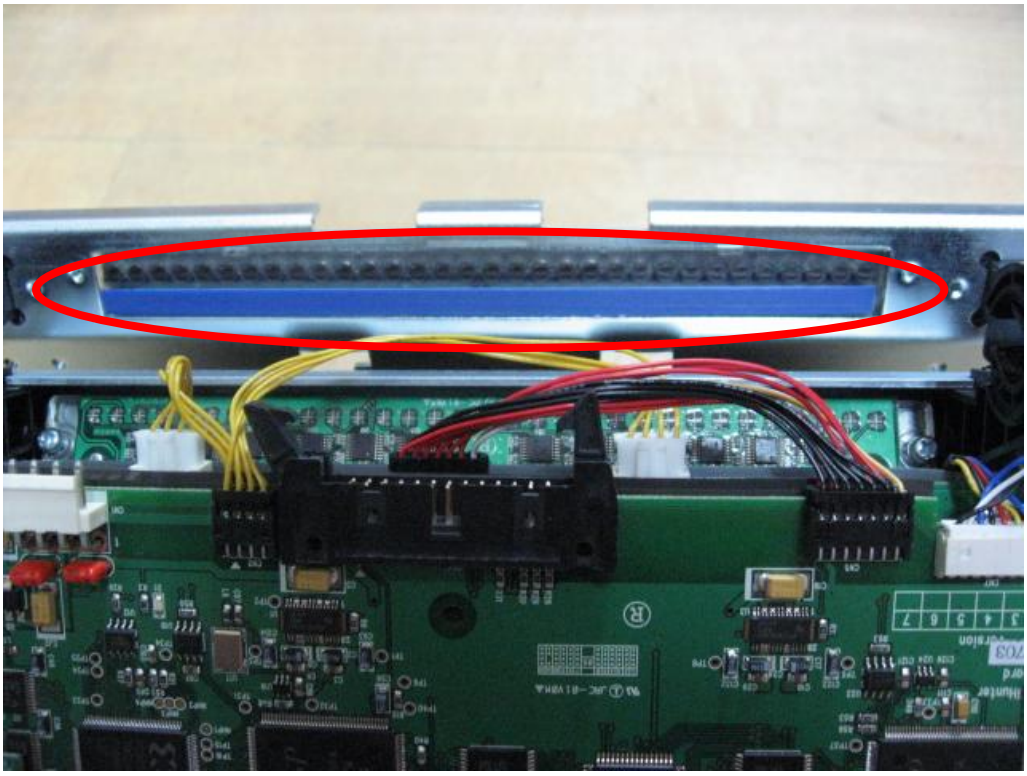

4. Assemble Detector Module to machine.

7-26. HOW TO ADD SIDE MG SENSOR

Preparations

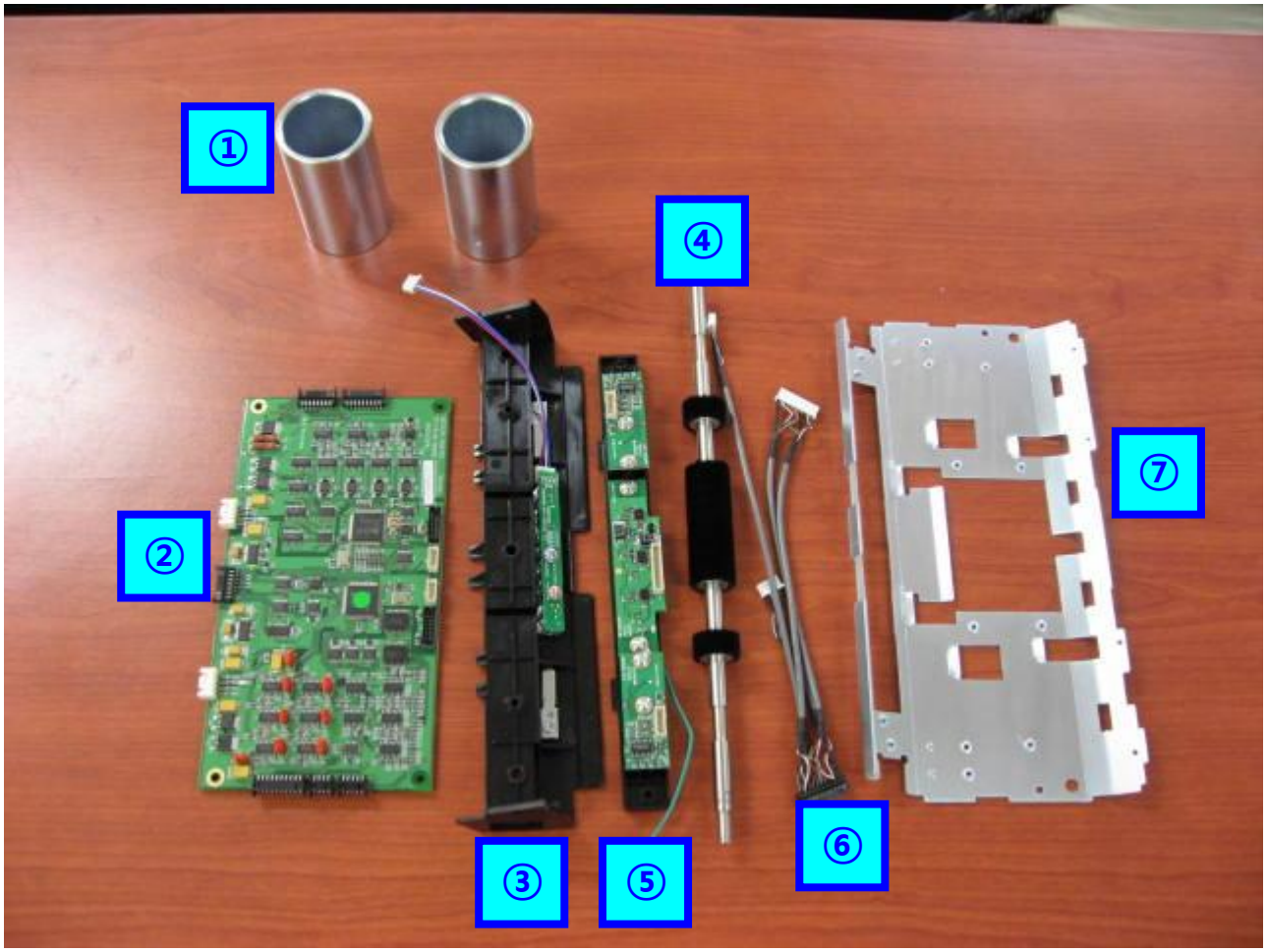

①Motor Cap x 2
②CF-IR Main Board for Side MG sensor
③CIS Sensor Housing for Side MG sensor
④MR Brush for Side MG sensor
⑤Side MG sensor Board
⑥Side MG sensor harness
⑦Detector Front Plate

1. Disassemble Detector Module

1) Prepare Magner150

2) Remove 4 screws of Rear Middle Cover.

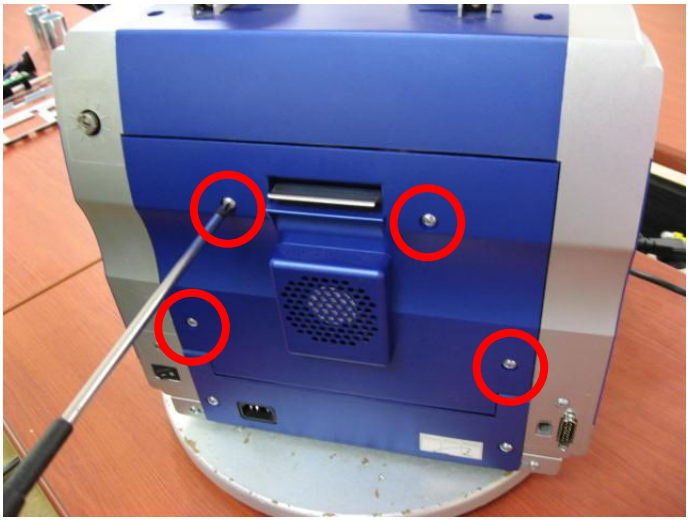

3) Separate Rear Middle Cover from machine

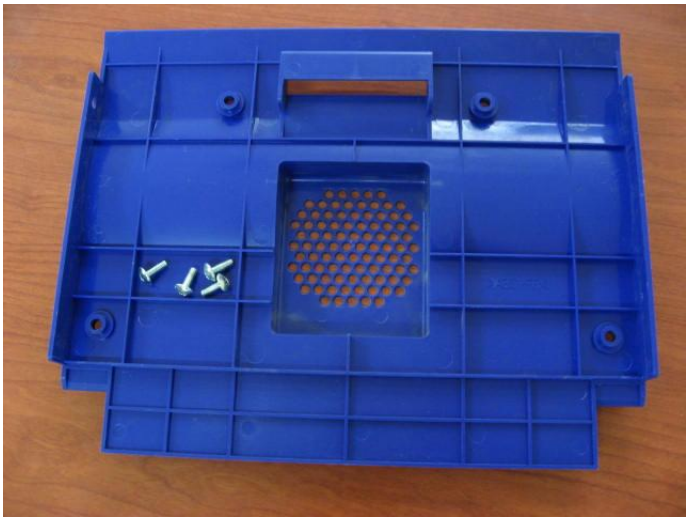

4) Remove 2 screws of Rear Lower Cover

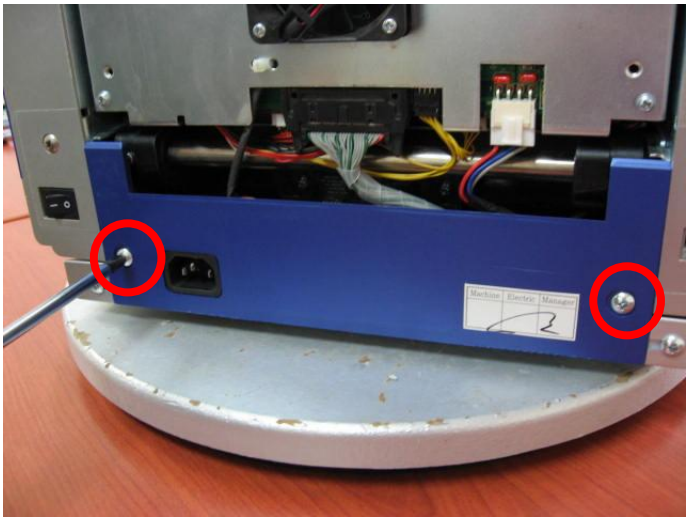

5) Separate Rear Lower Cover from machine.

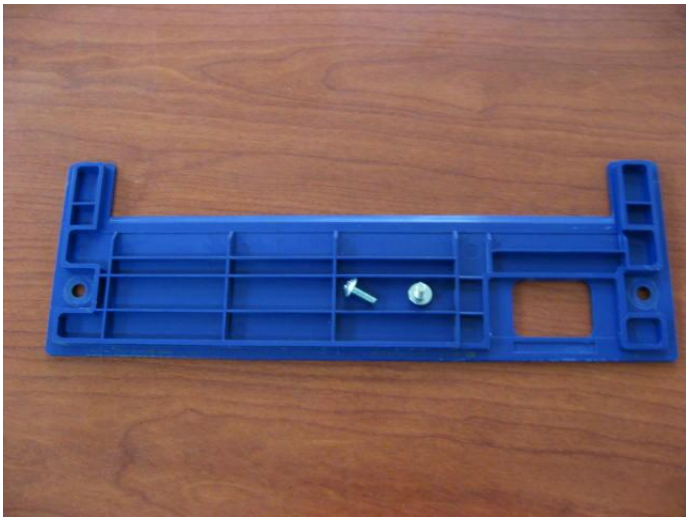

6) Open Rear Door and remove screw A.

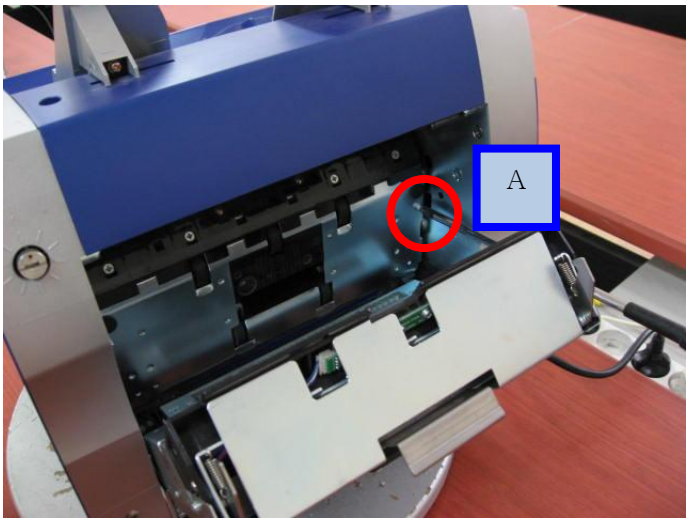

7) Remove screw B.

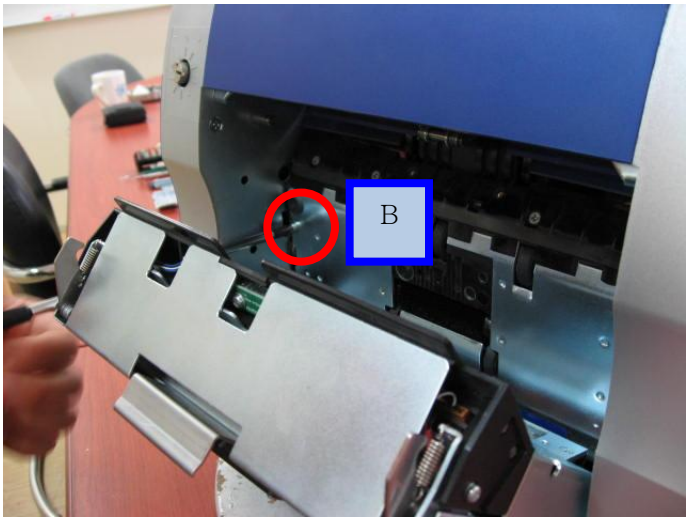

8) Close Rear Door and Remove screw C and D.

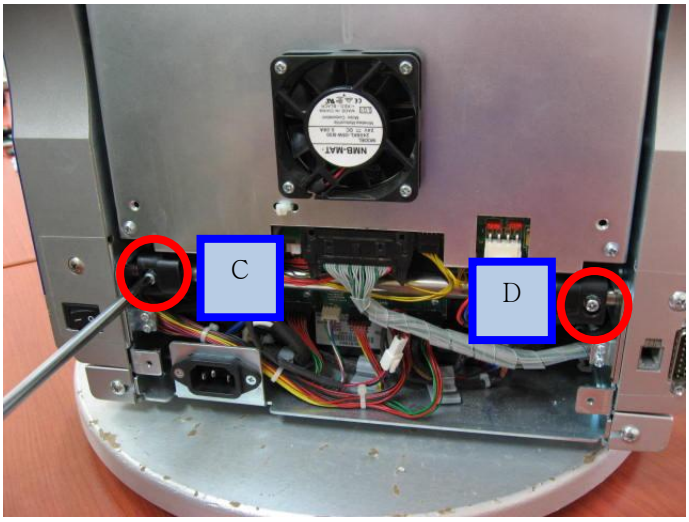

9) Separate CIS Operation harness.

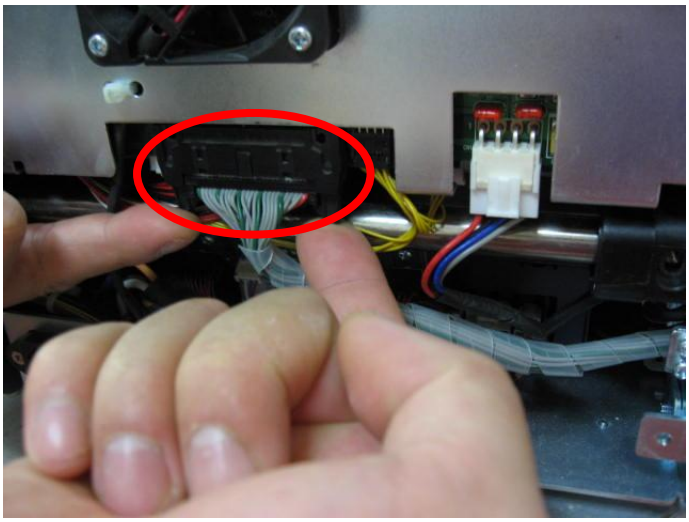

10) Separate CIS Power harness

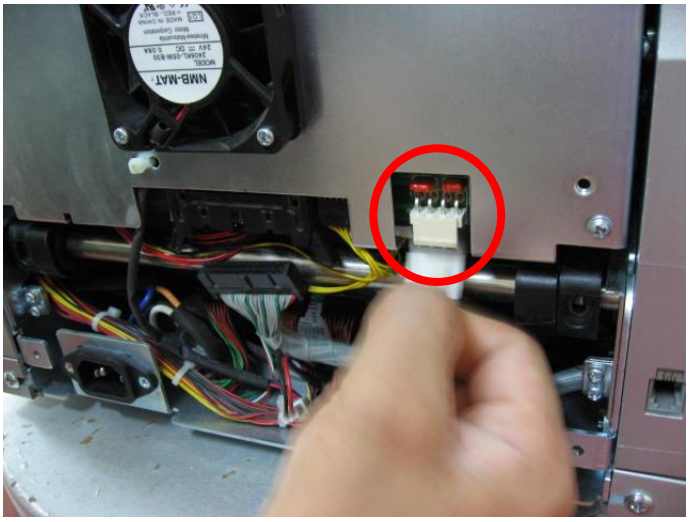

11) Separate Fan operation harness.

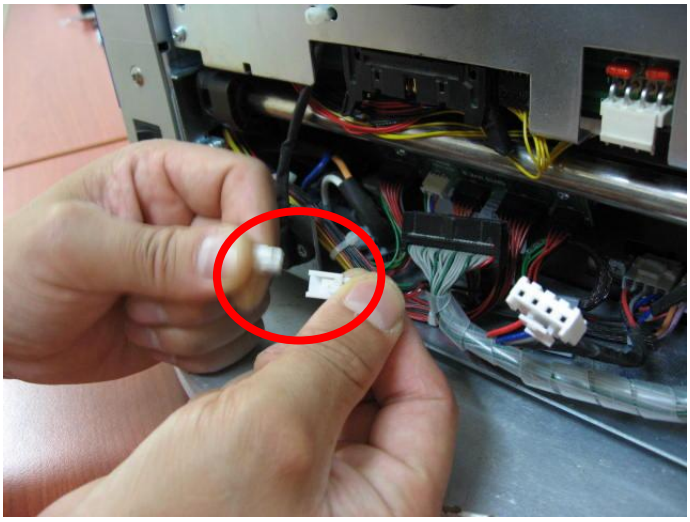

12) Open Rear Door slightly.

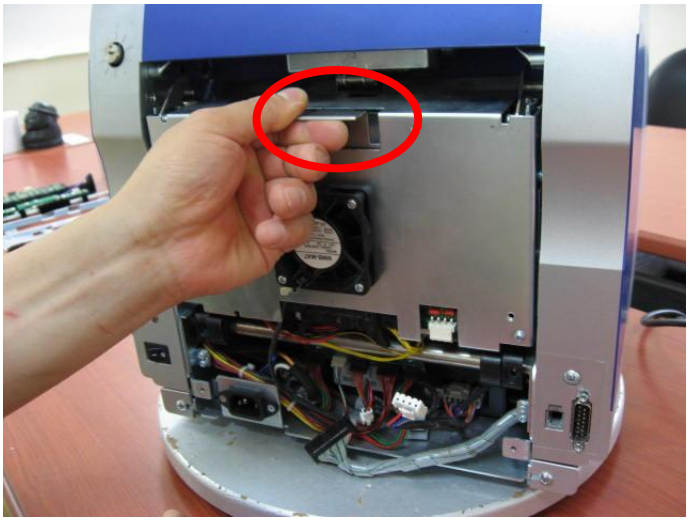

13) Pull Detector Left and Right Hinge as picture.

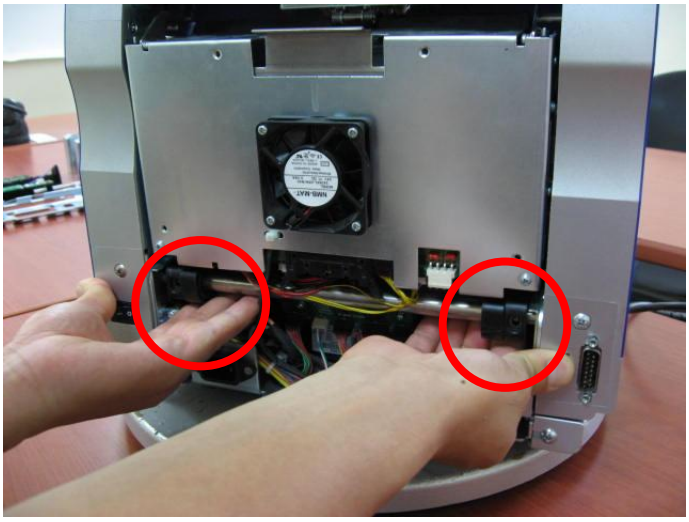

14) Remove Detector Module from machine.

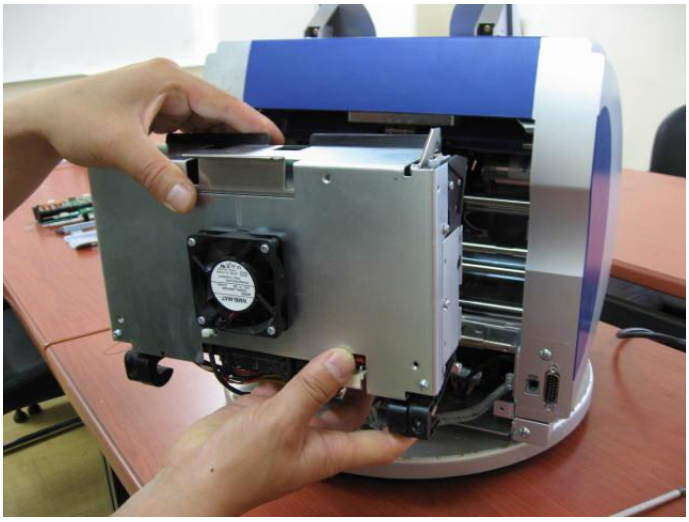

15) The separated Detector Module.

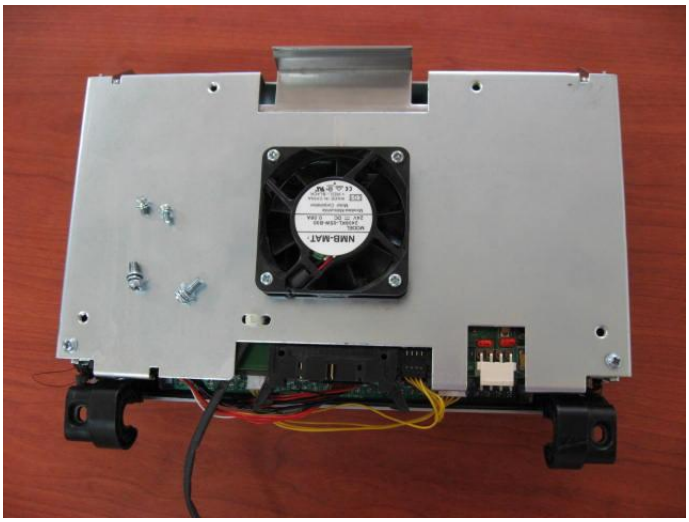

2. Replace MG Brush

1) Remove screw A to remove Right Side Cover.

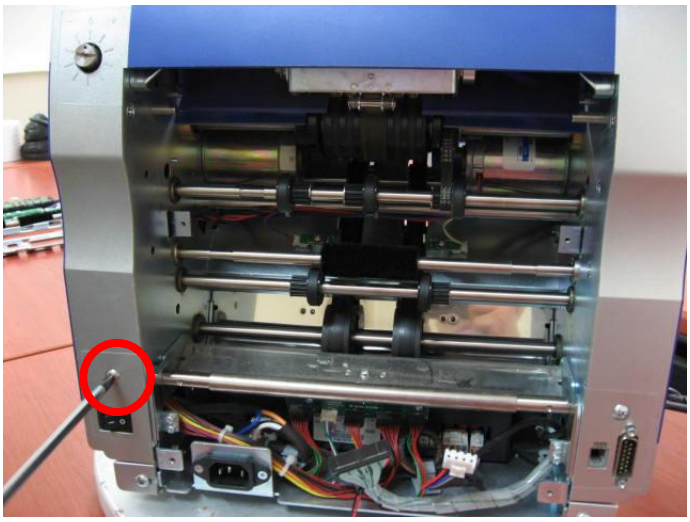

2) Remove screw B to remove Right Side Cover.

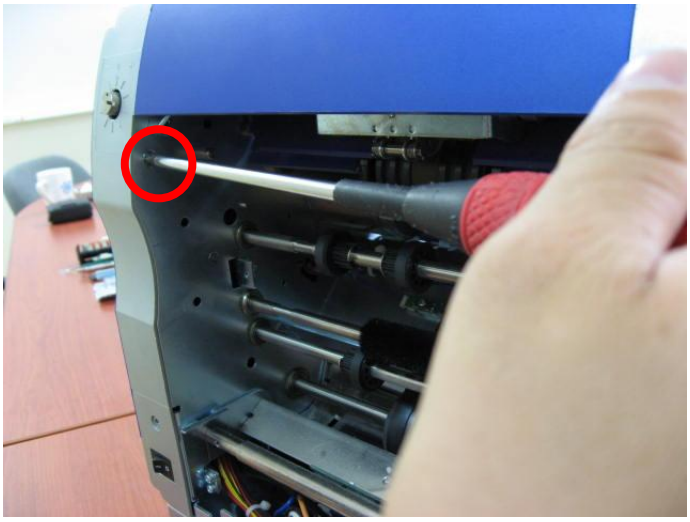

3) Remove screw C to remove Left Side Cover.

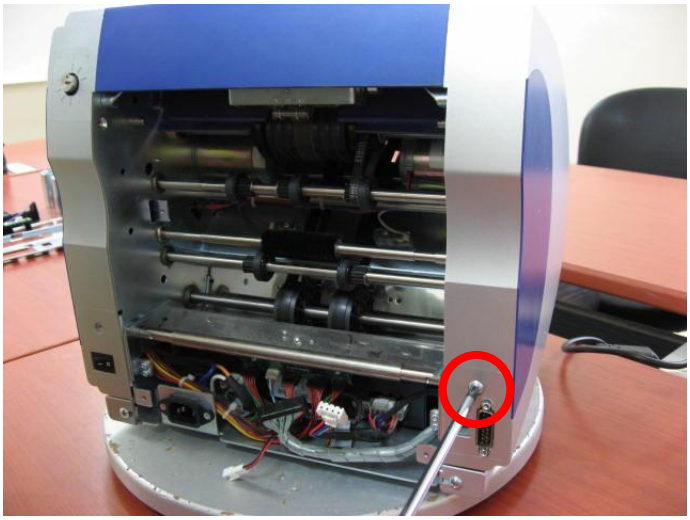

4) Remove screw D to remove Left Side Cover

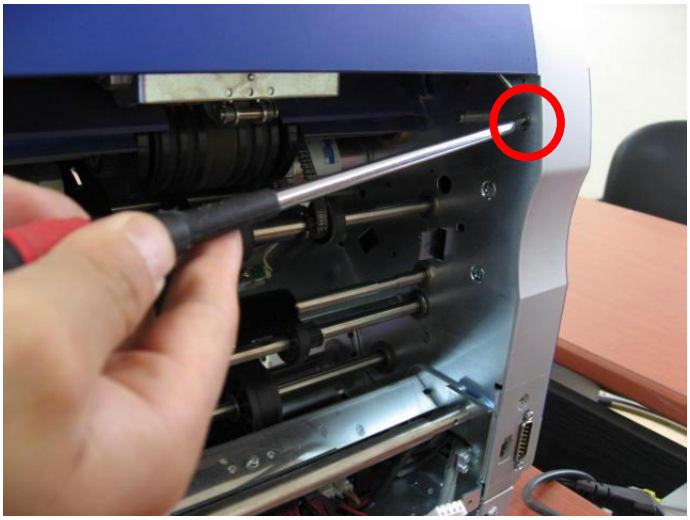

5) Push Release Buttons and lift up Front side of machine.

6) Opened Front Side.

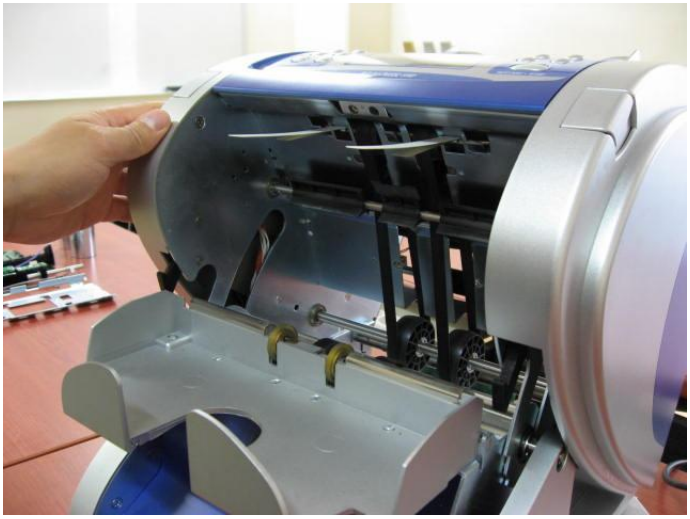

7) Remove screw E to remove Left Side Cover.

8) Separate Left Side Cover

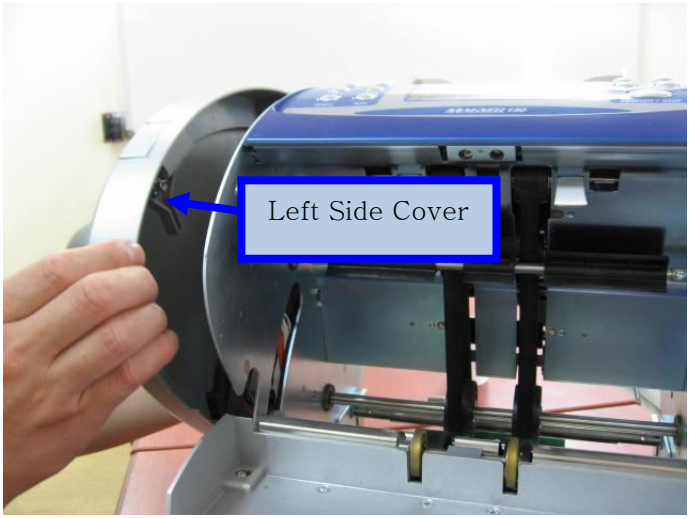

9) Remove screw F to remove Right Side Cover.

10) Separate Right Side Cover.

11) Separated Left and Right Side Cover.

12) Remove 4 screws to separate Motor Drive Board which is placed at Right Side of machine.

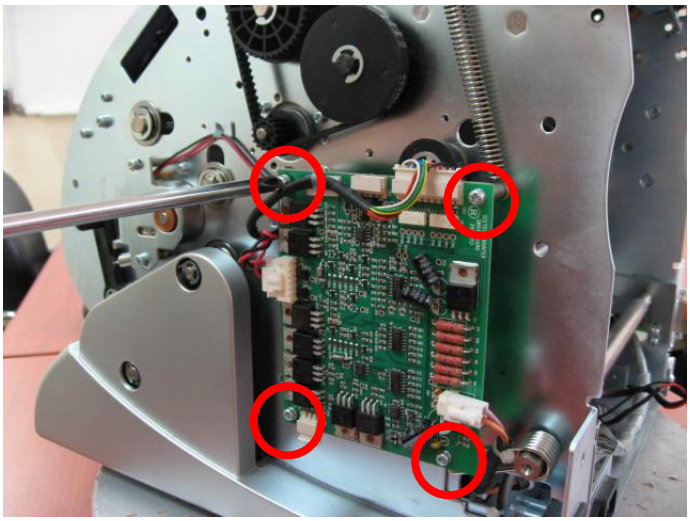

13) Separate all harness which is connected with Motor Drive Board.

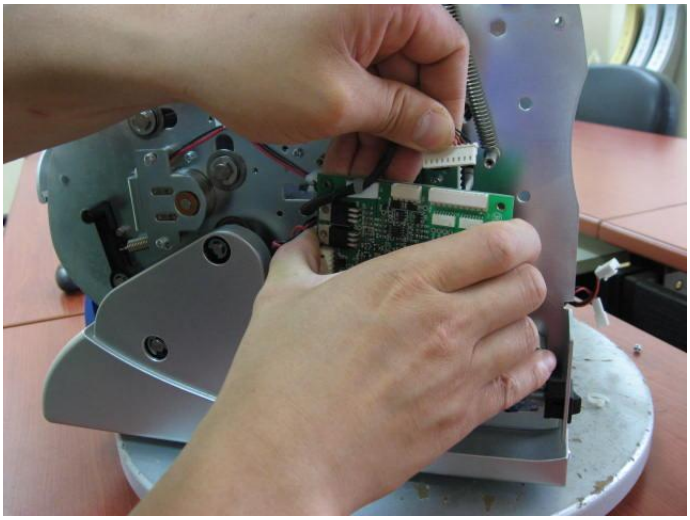

14) Disassemble Motor Drive Board from machine.

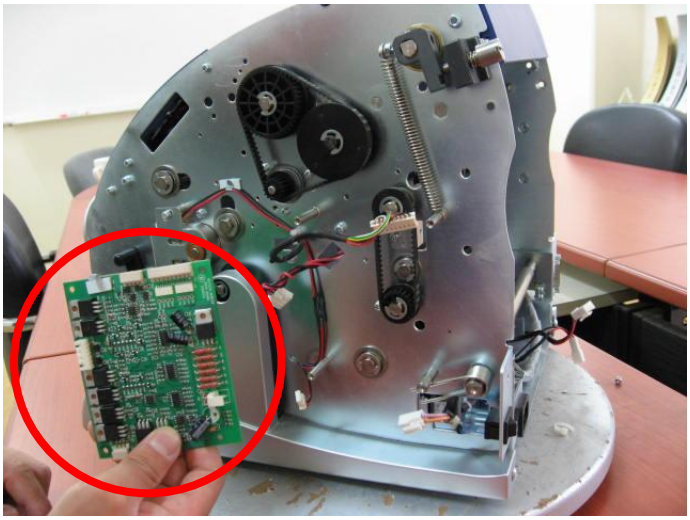

15) Remove Belt A.

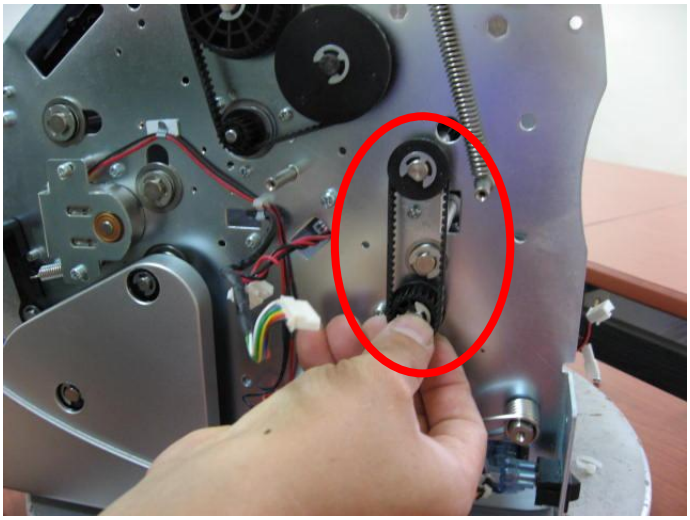

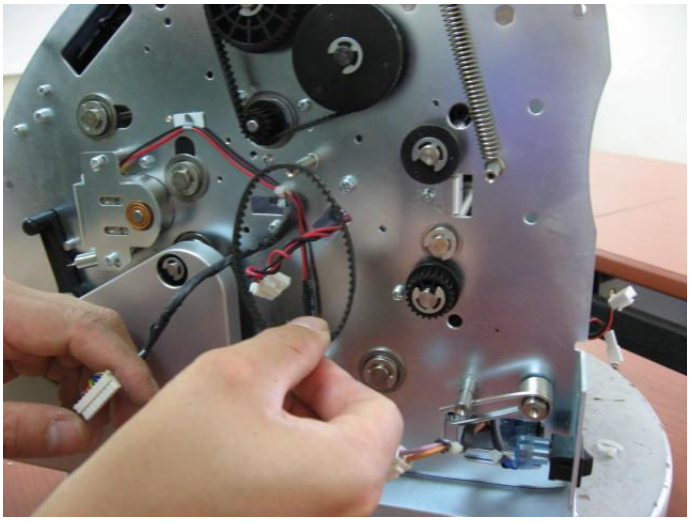

16) Main Board is placed at Left Side of machine. Separate LED Display Operation Harness as below.

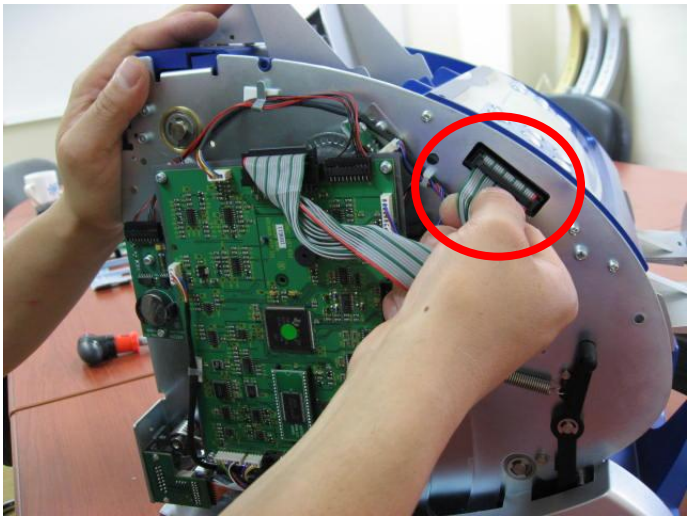

17) Separate all harness which is connected with Main Board.

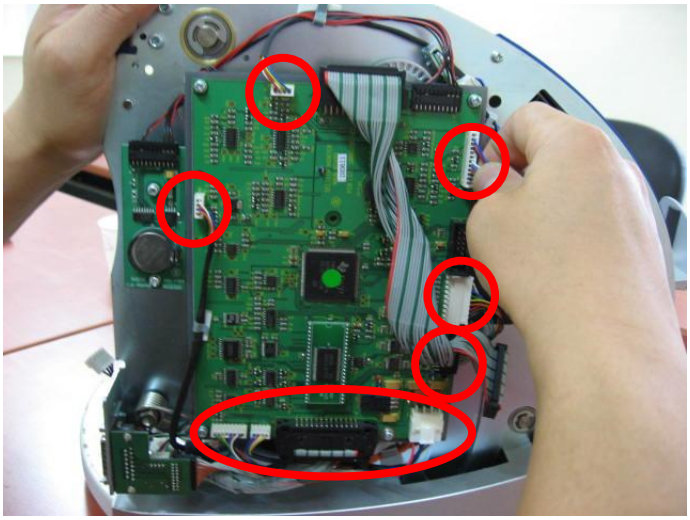

18) Remove 4 screws on Main board.

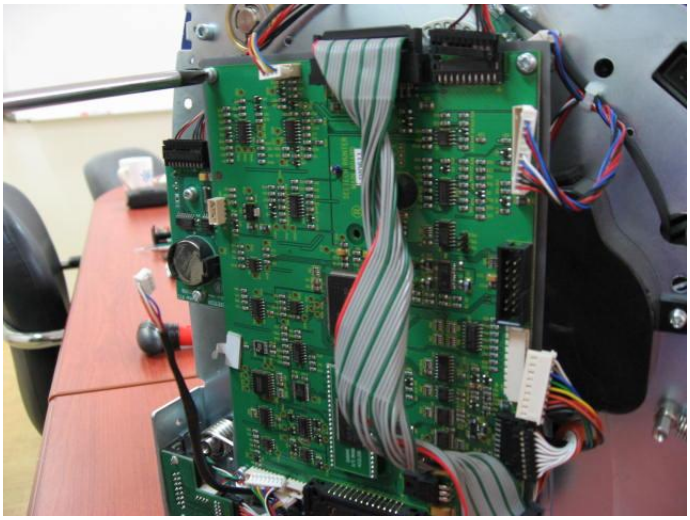

19) Separate Main Board from machine.

20) Separated Main Board.

21) Left Side of Machine after separate Main Board.

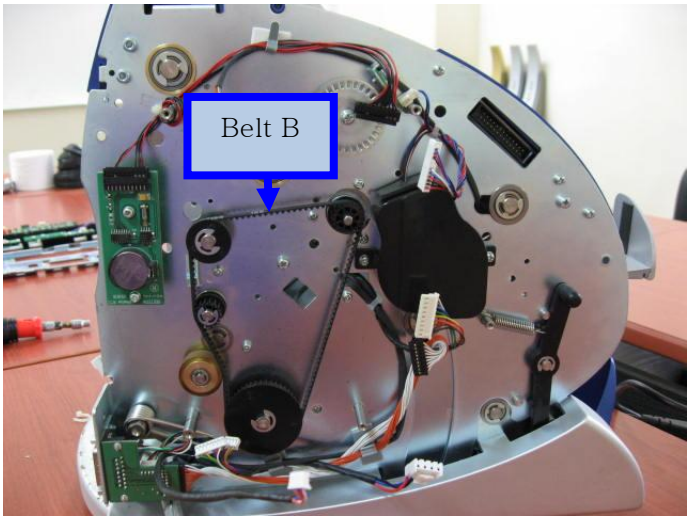

22) Remove Belt B.

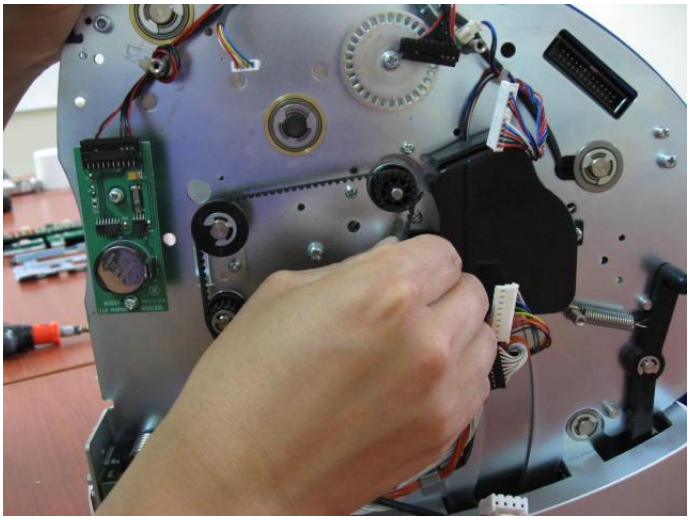

23) Left Side after remove Belt B.

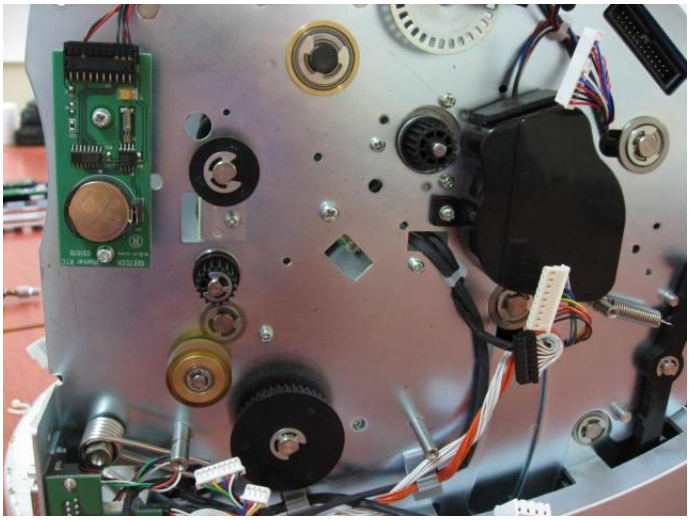

24) Remove E-ring from Gear A as picture.

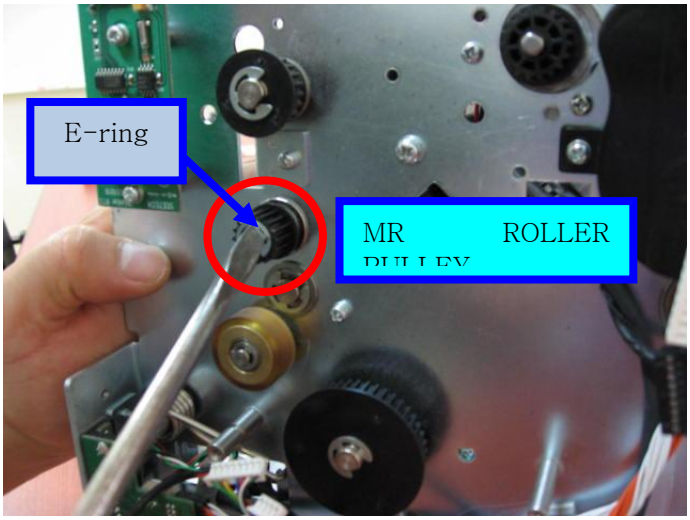

25) After removing E-ring, you can remove MR ROLLER PULLEY from machine.
Remove MR ROLLER PULLEY.

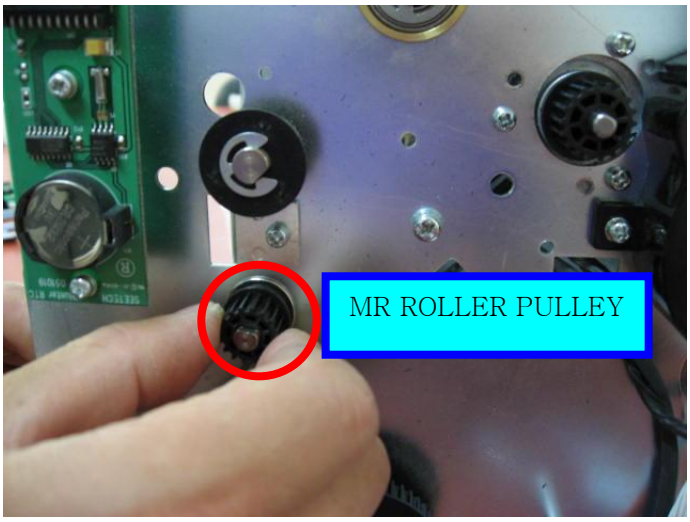

26) Removed E-ring and MR ROLLER PULLEY.

27) Go to Right Side of machine and remove E-ring from B as picture.

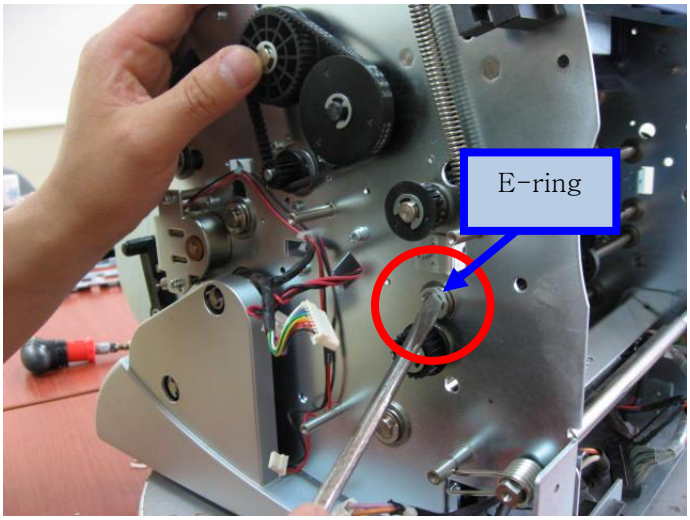

28) When remove E-ring, grab MR Brush not to turn.

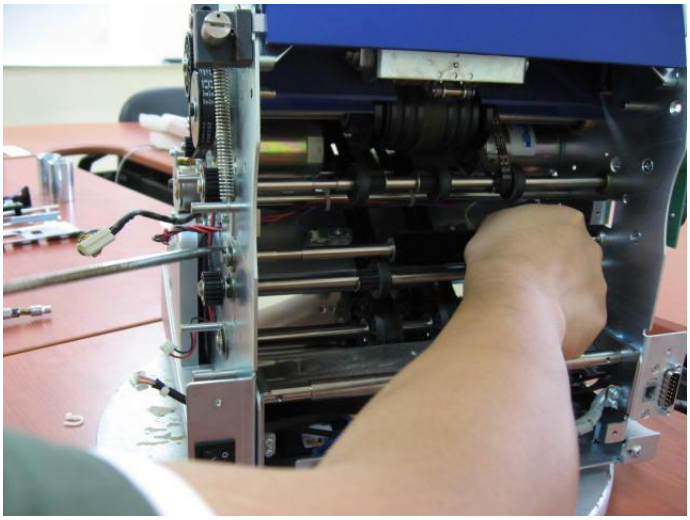

29) Remove three washers after removing E-ring.

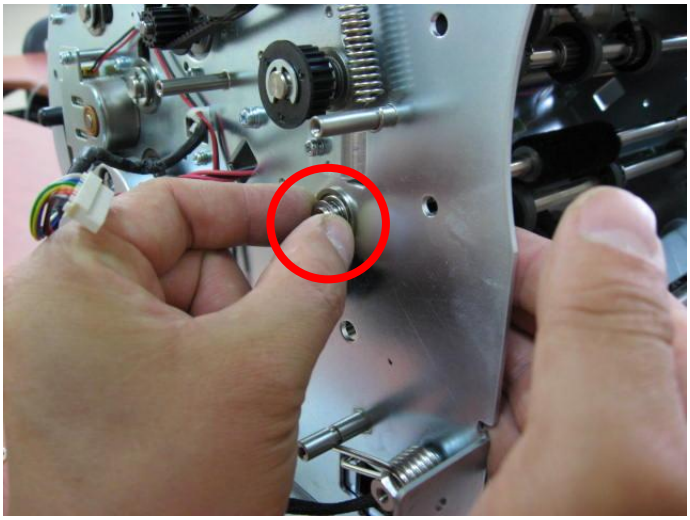

30) Removed E-ring and washers.

31) Go to Left Side of machine and Remove E-ring from C as picture.

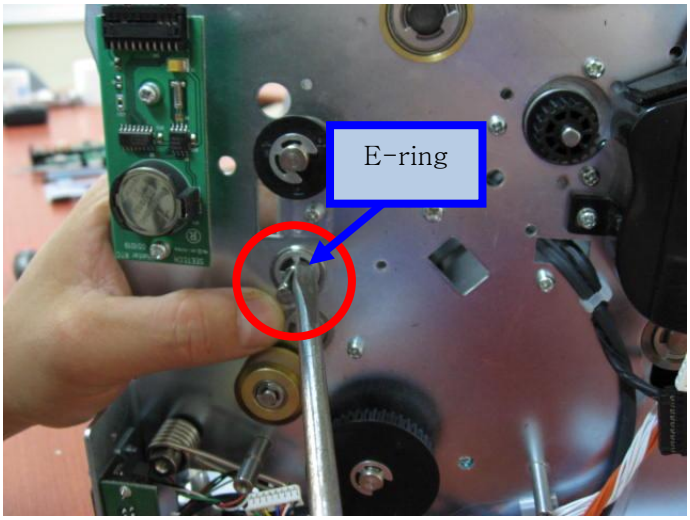

32) After removing E-ring, separate Bearing.

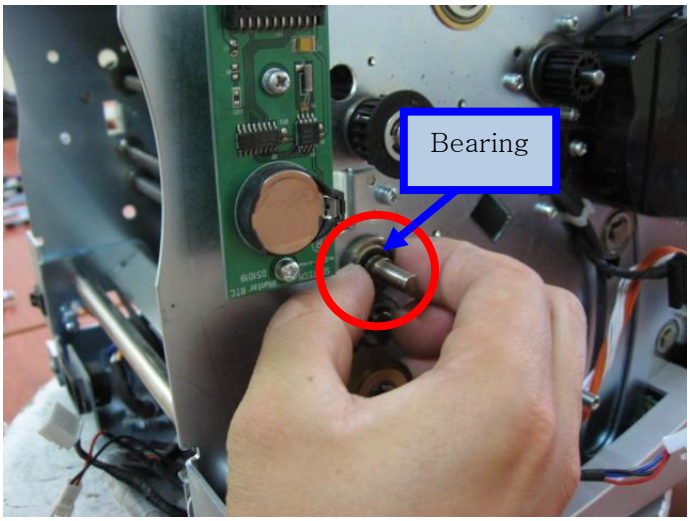

33) Go to Right Side of machine and separate Bearing.

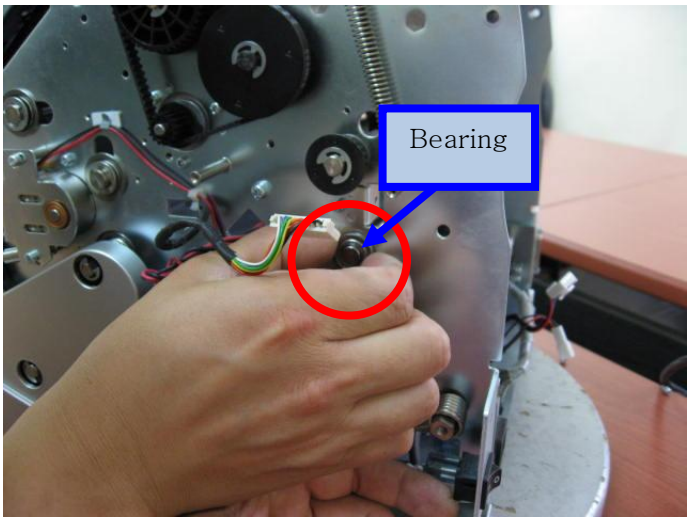

34) Because remove Bearings of both sides, you can disassemble MR Brush from machine.

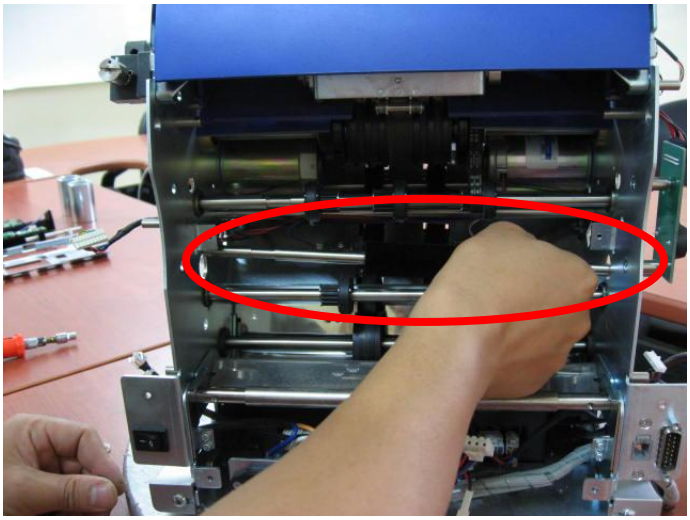

35) Disassembled MR Brush.

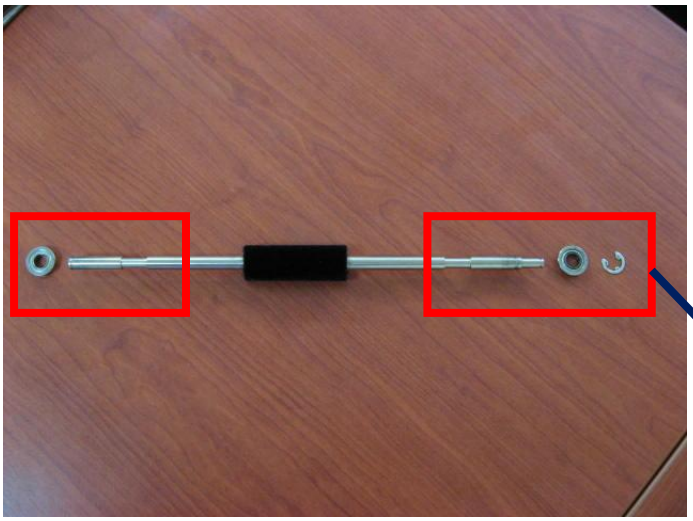

36) Prepare MR Brush for Side MG sensor.

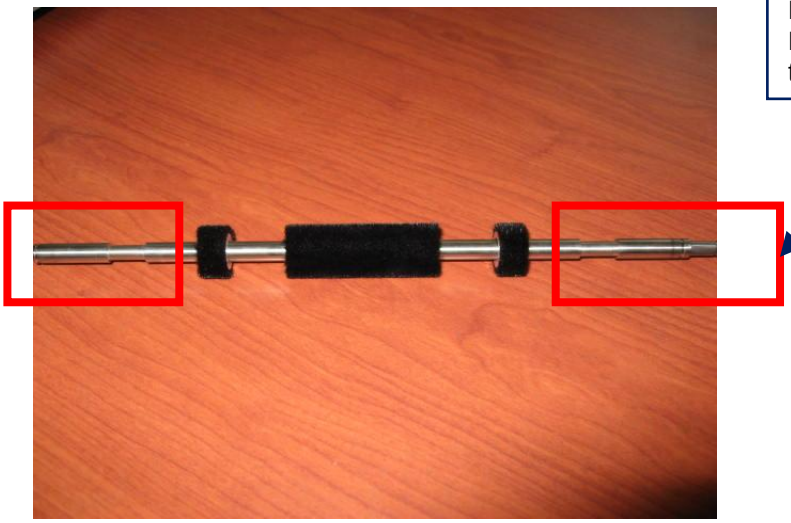

Please note the direction of MR Brush. When you replace old Brush with new Brush, you have to match the direction.

37) Put MR Brush for Side MG sensor to machine.

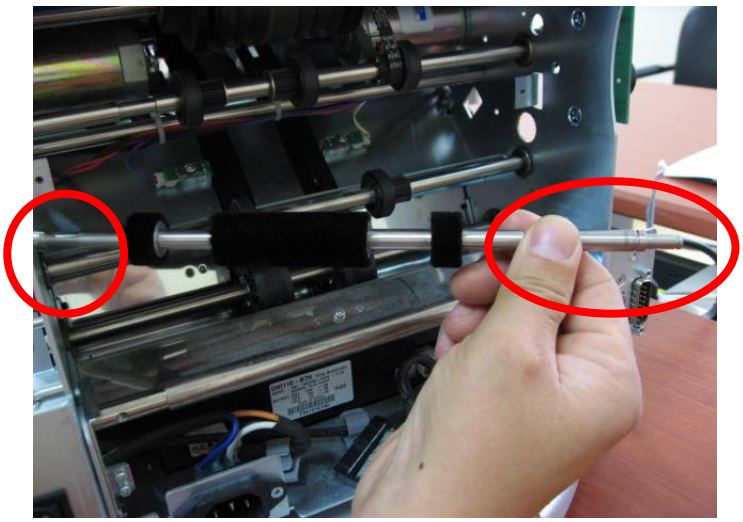

Right Side of shaft is longer than Left Side

38) Go to Left Side of machine. Put Bearing to hole for MR Brush shaft and Insert MR Brush shaft to Bearing.

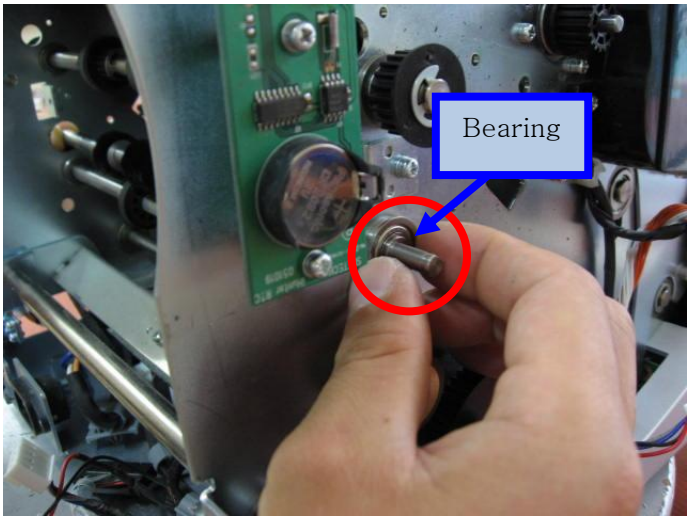

39) Go to Right Side of machine. In the same method, insert MR Brush Shaft to hole after insert Bearing first.

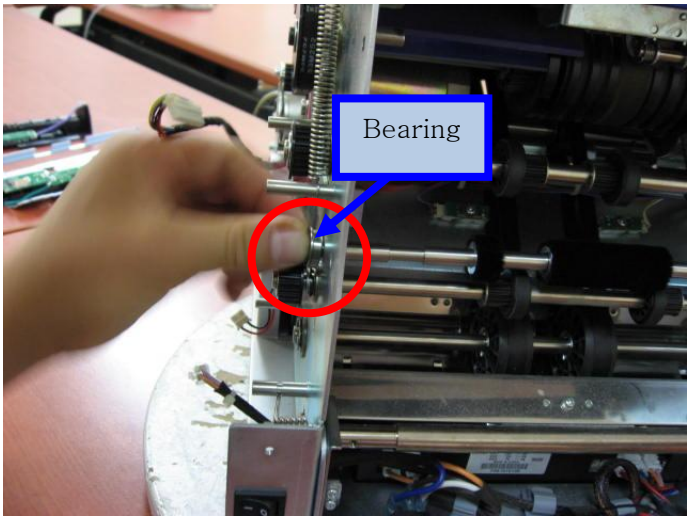

40) Insert plain washer.

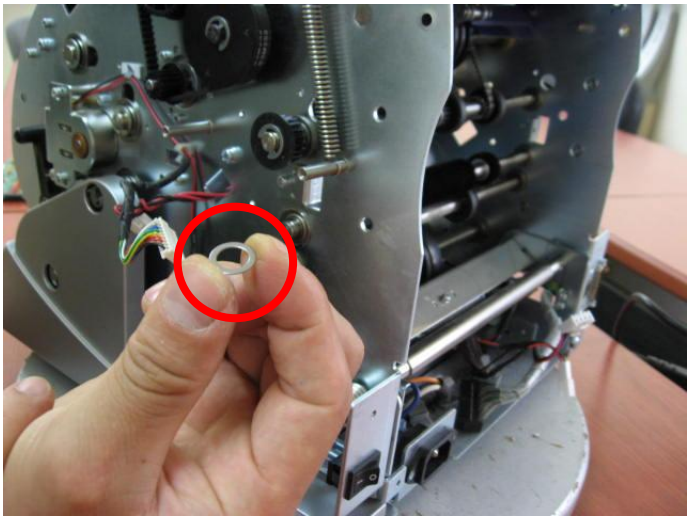

41) Insert wave washer.

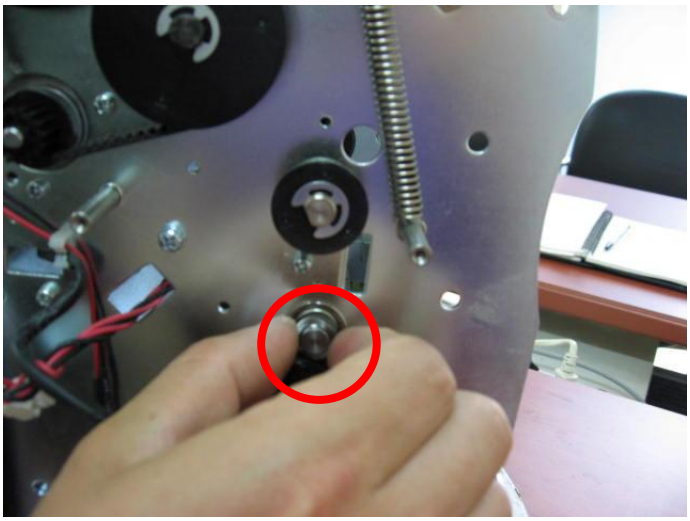

42) Insert plain washer again.

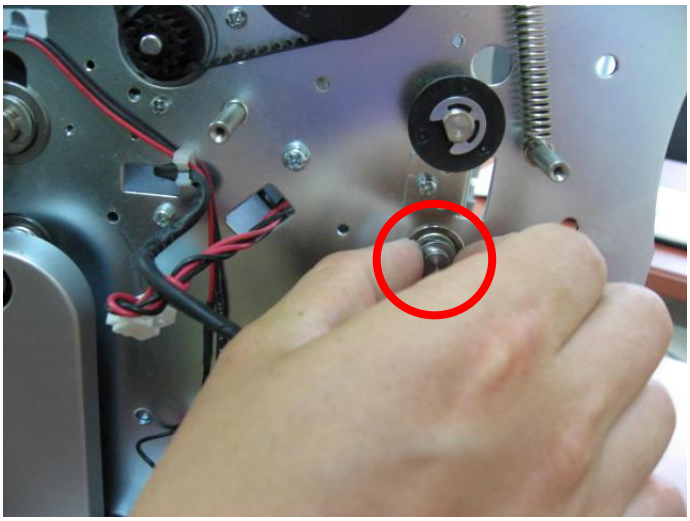

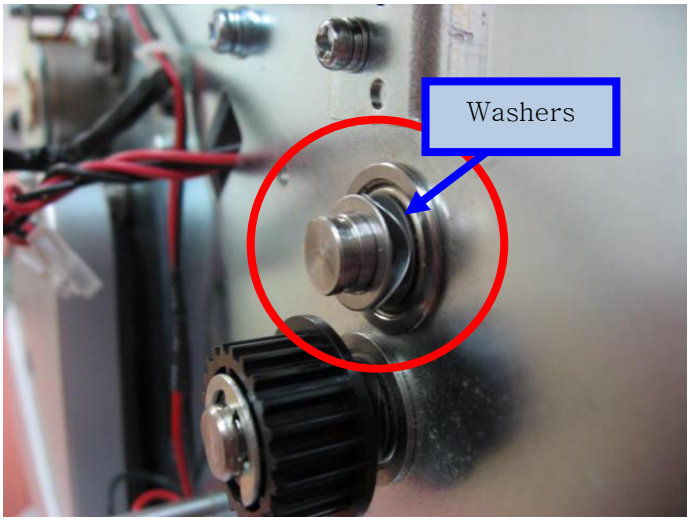

43) MR Brush Shaft has groove for E-ring. Put E-ring to the groove.

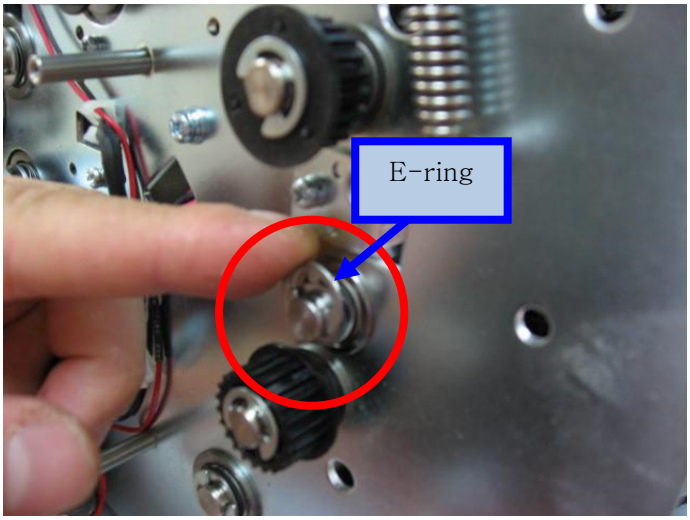

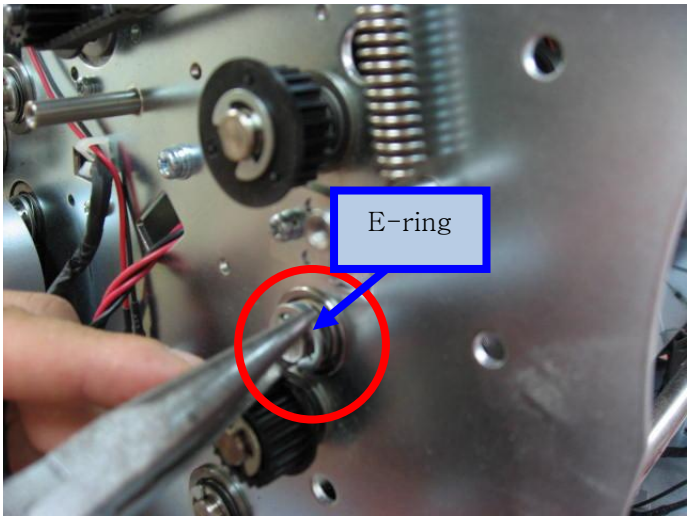

44) Go to Left Side of machine. Push MR Brush Shaft to Left Side of machine. And put E-ring to the groove of MR Brush Shaft.

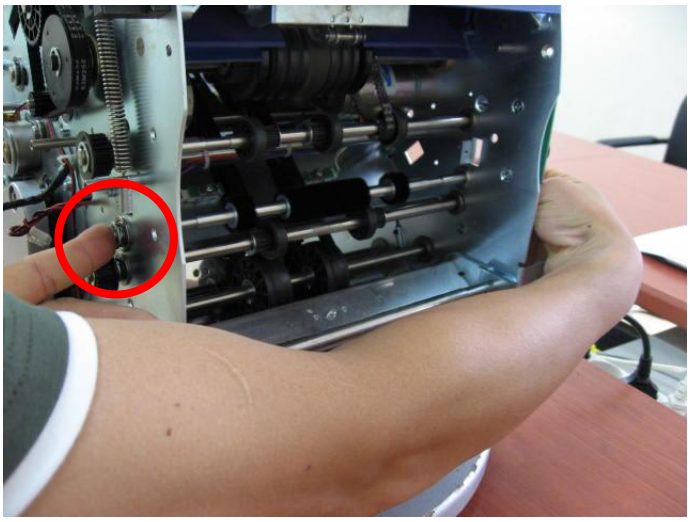

45) Insert E-ring to groove of MR brush Shaft.

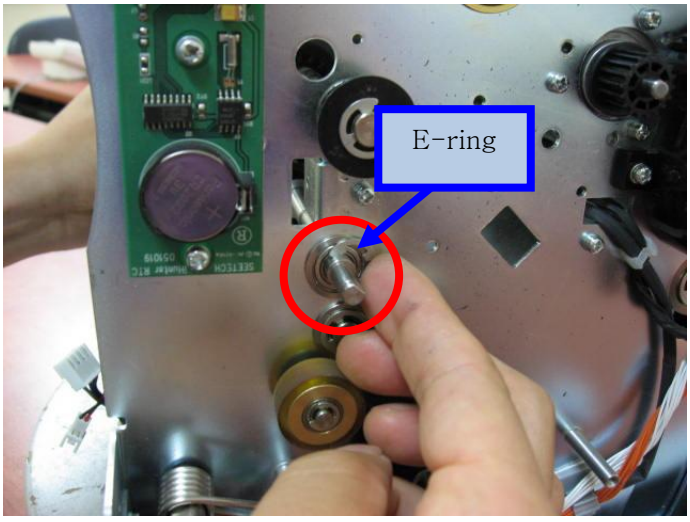

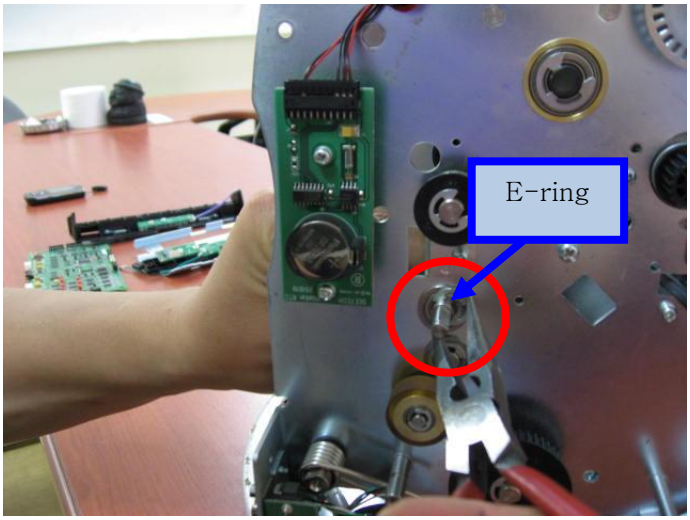

46) After inserting E-ring, insert MR ROLLER PULLEY.

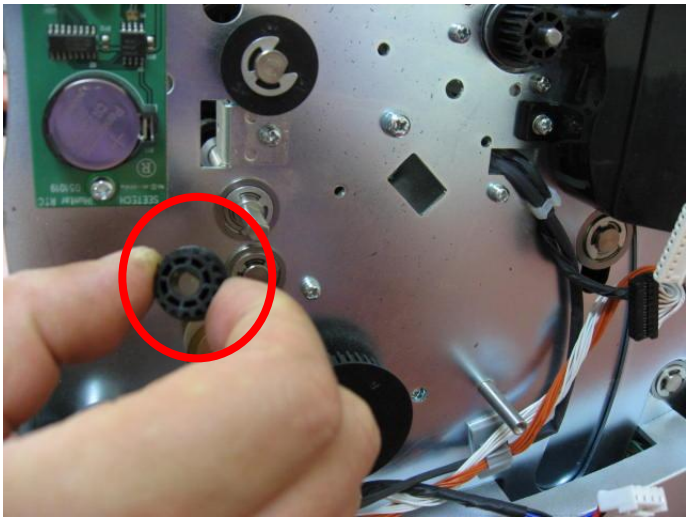

Please check direction of MR ROLLER PULLEY

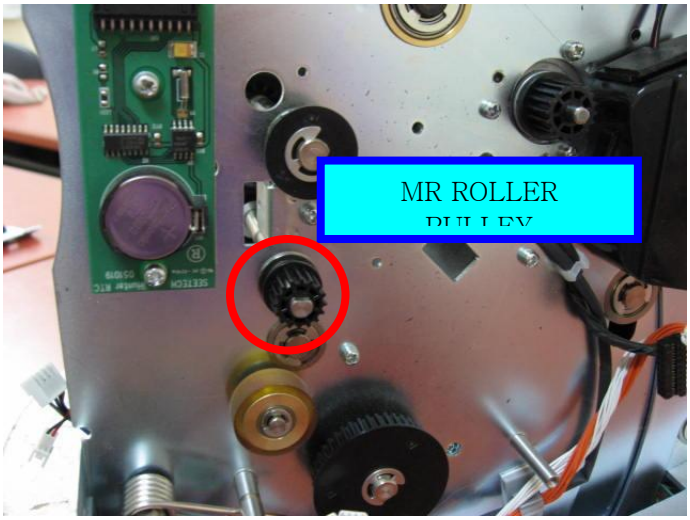

47) To fix Gear B, insert E-ring again to Gear B.

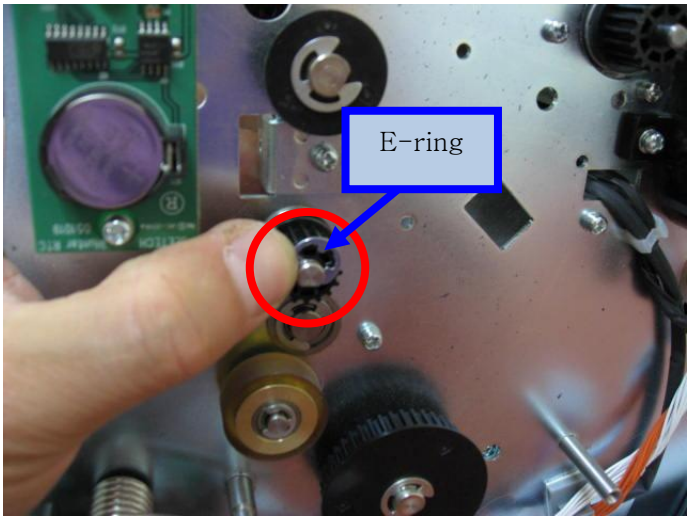

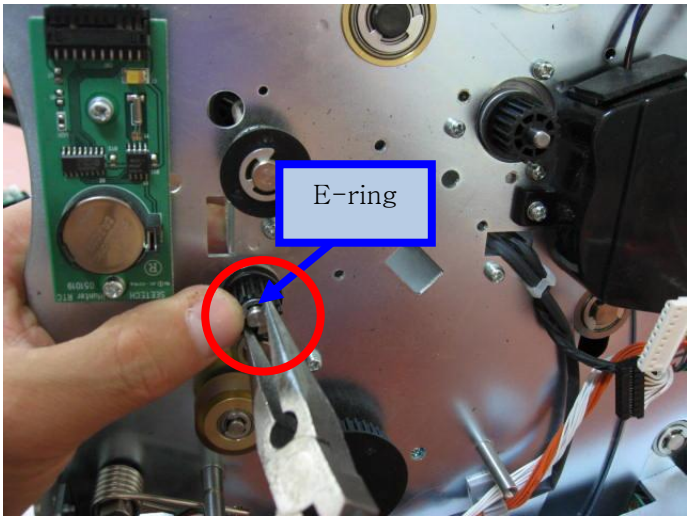

3. Add Motor Cap to Main Motor and Sub Motor

1) Go to Right Side of machine. Remove Belt A.

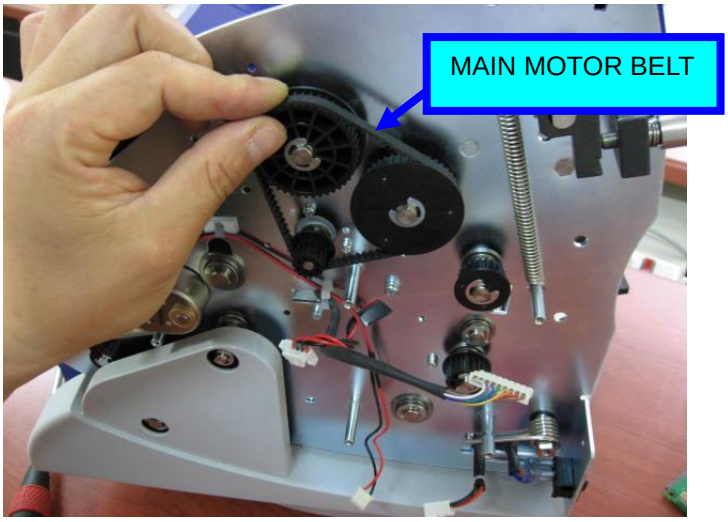

2) To separate Hopper Guide Cover, remove 2 screws.

3) Separate Hopper Guide Cover from machine.

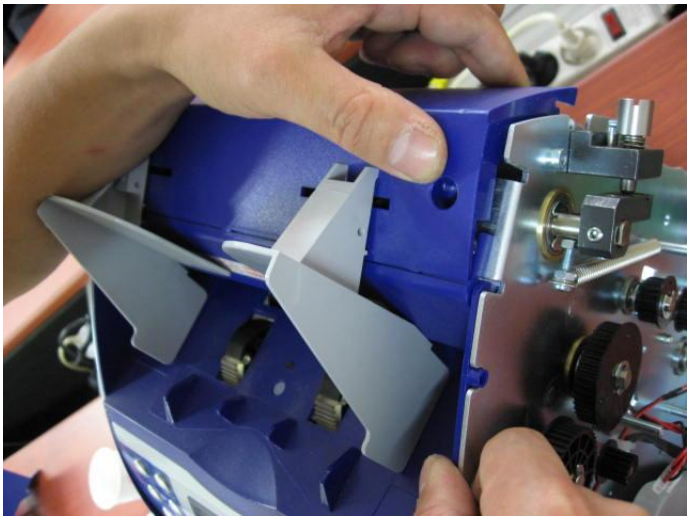

4) Separated Hopper Guide Cover.

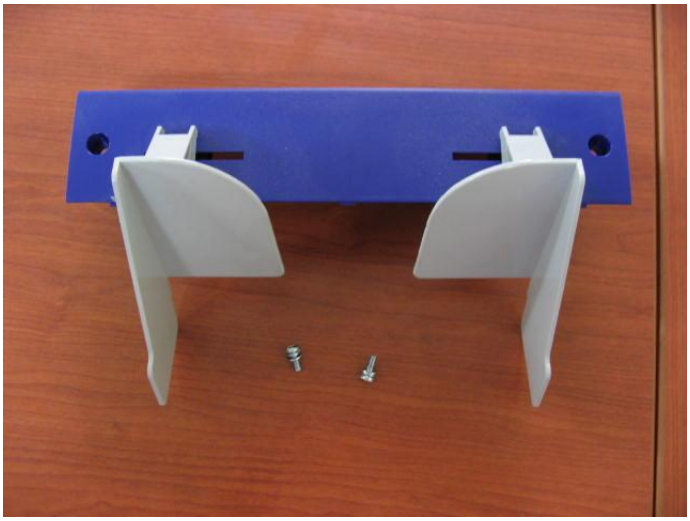

5) To separate Front Cover, remove screw A of Right Side of machine.

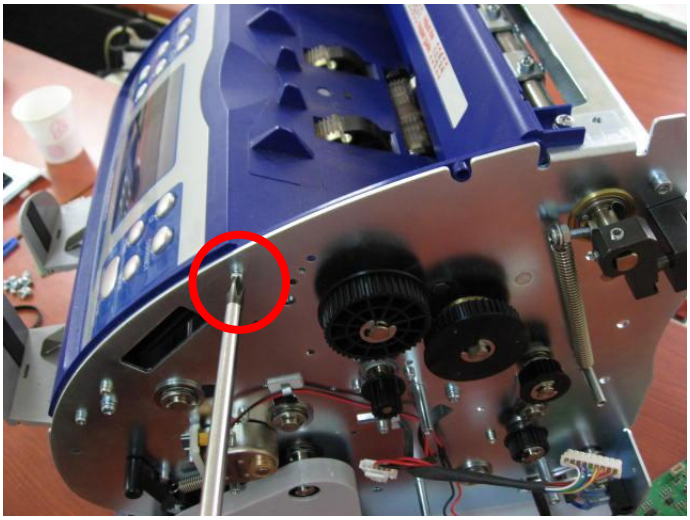

6) Remove screw B of Left Side of machine.

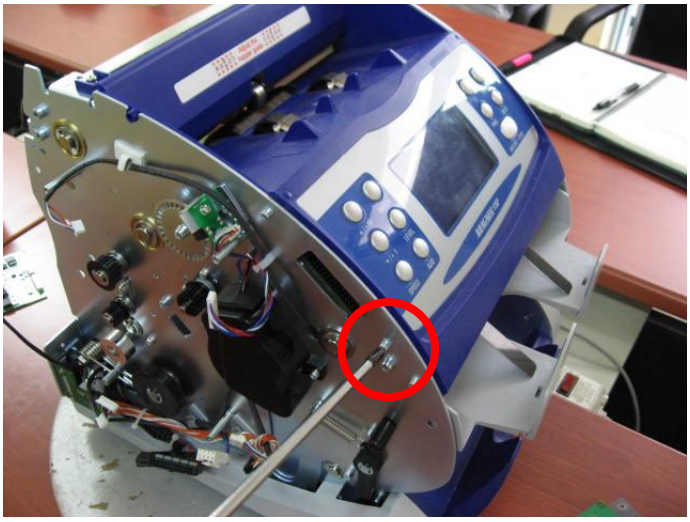

7) Separate Front Cover from machine.

8) Separated Front Cover.

9) Go to Right Side of machine and remove Gear B from machine.

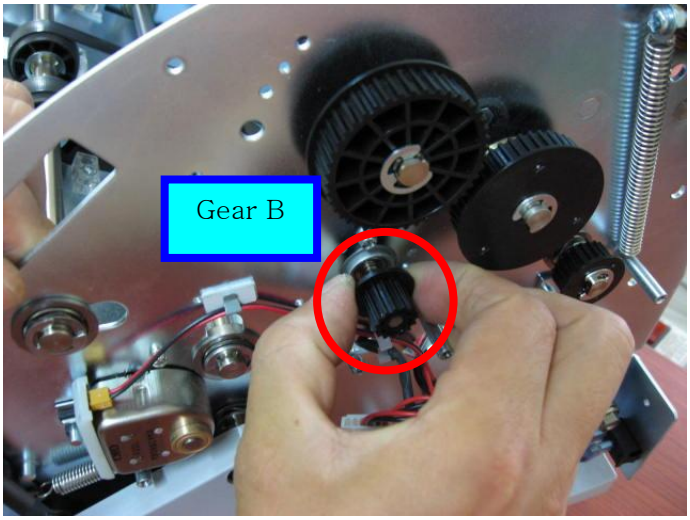

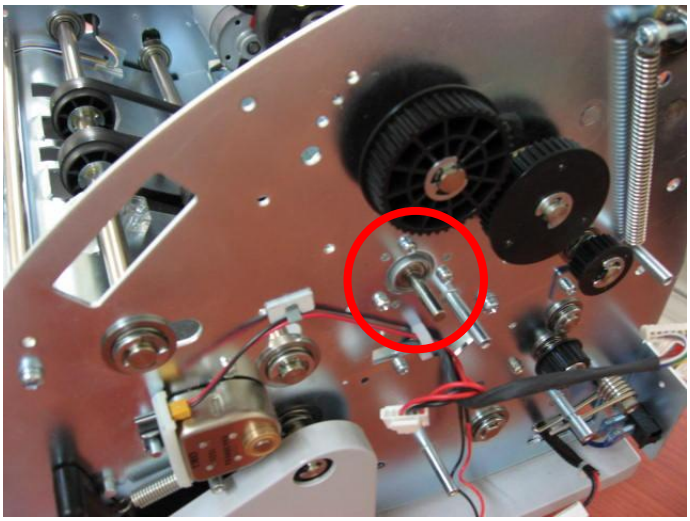

10) To separate Main Motor, remove 3 screws from machine.

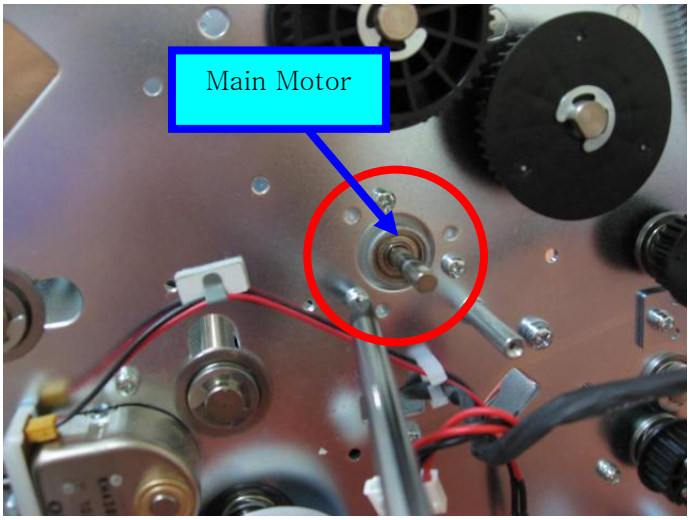

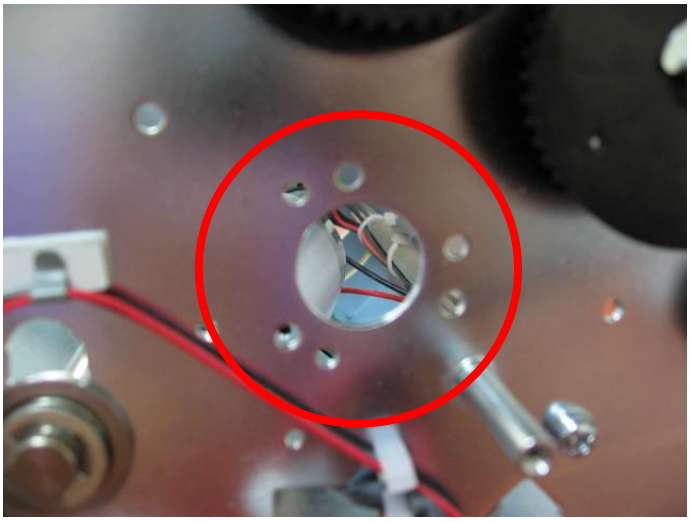

11) Go to Left Side of machine.

12) Remove Gear C.

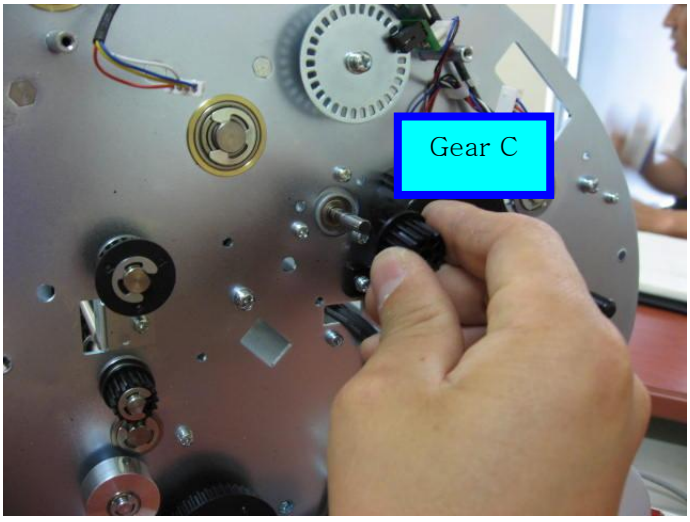

13) To separate Sub Motor, remove 3 screws from machine.

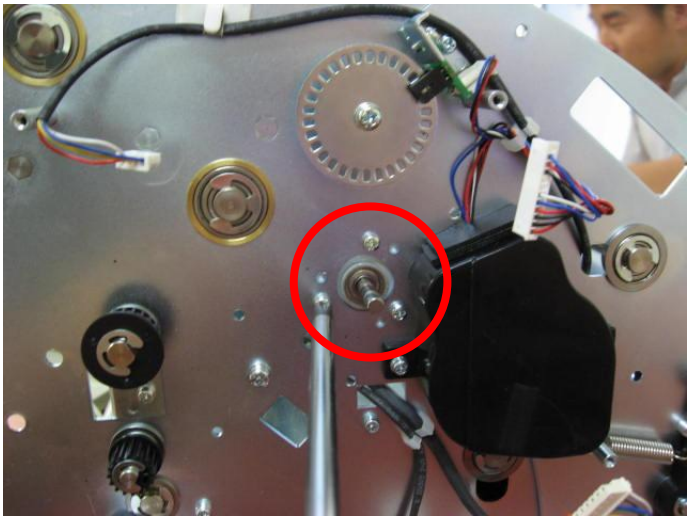

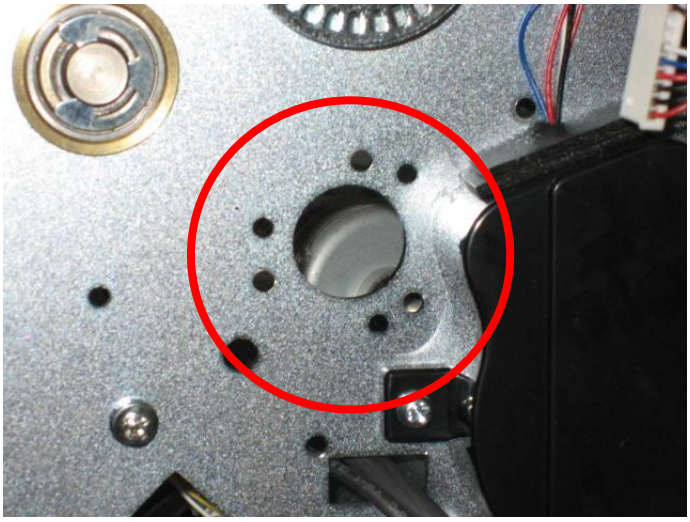

14) Separated Sub Motor from Left Side Plate.

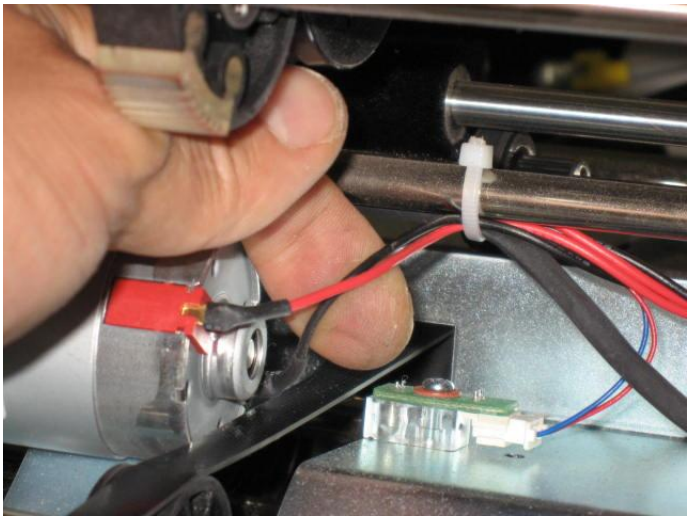

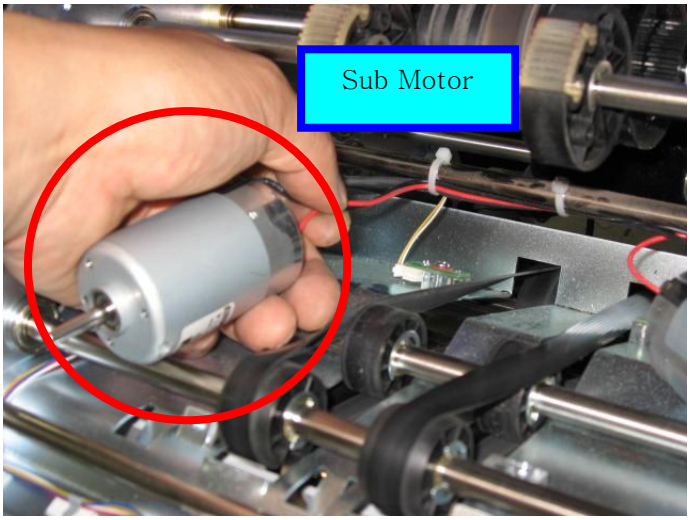

15) Put Motor Cap to Sub Motor as picture.

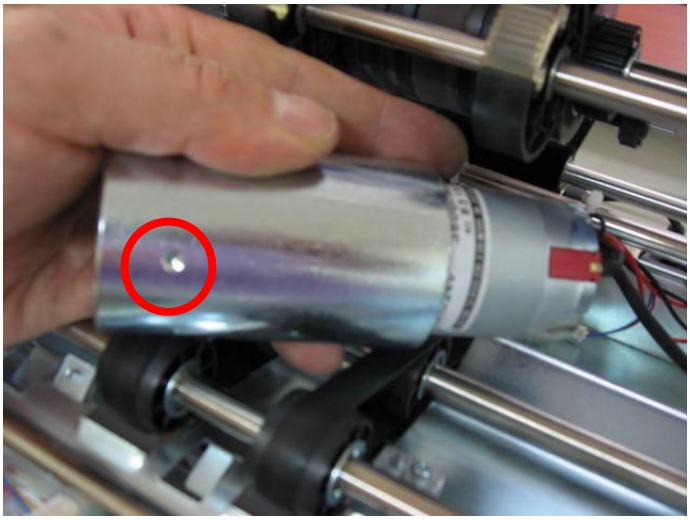

16) After putting Motor Cap to Sub Motor.

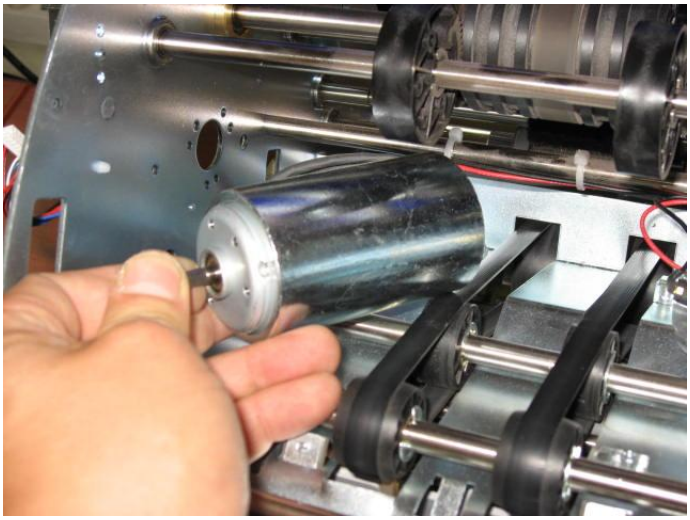

17) Insert Sub Motor to hole of Left Side Plate again.

18) Tighten 3 screws again to fix Sub Motor.

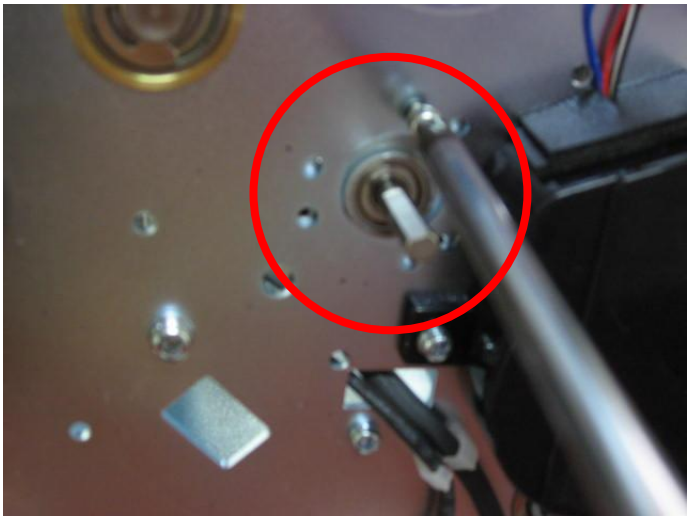

Pay attention to the holes of screw.

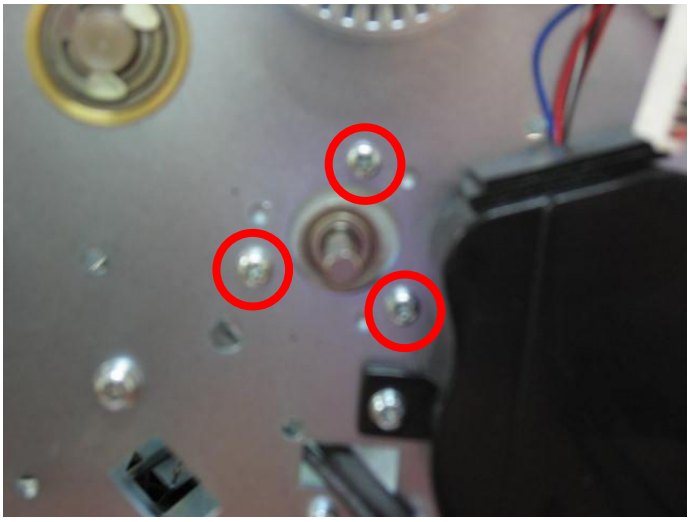

19) Put Motor Cap to Main Motor as picture.

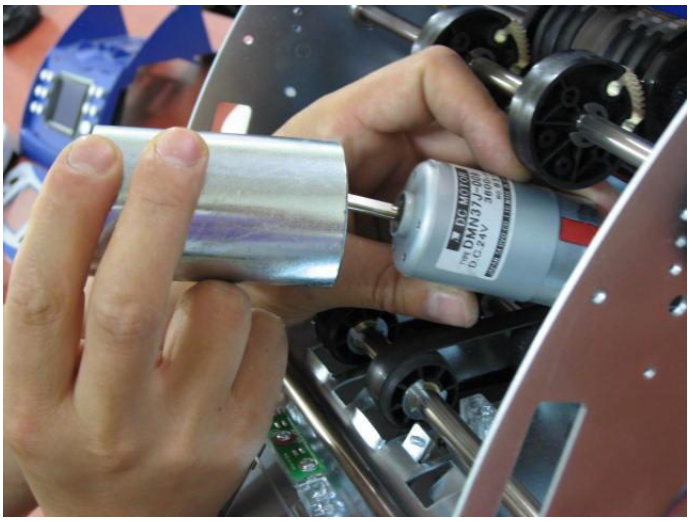

When insert Motor Cap, if harness is short for inserting, pull the harness which is fixed to shaft by cable tie. You can get margin of harness.

20) Insert Main Motor to Right Side Plate.

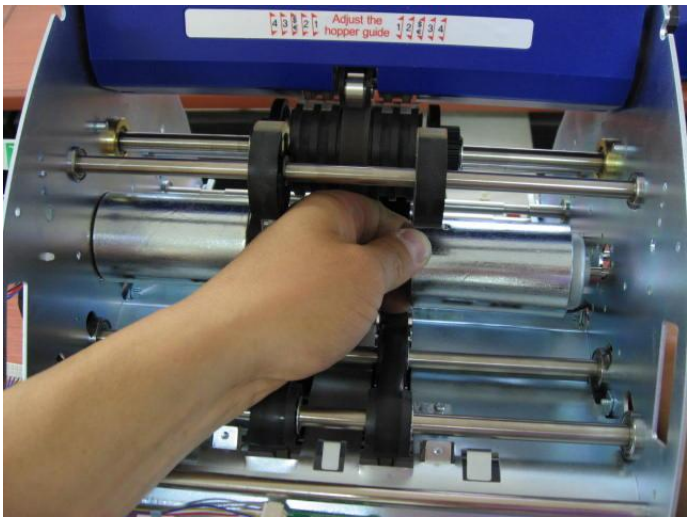

21) Tighten 3 screws to fix Main Motor.

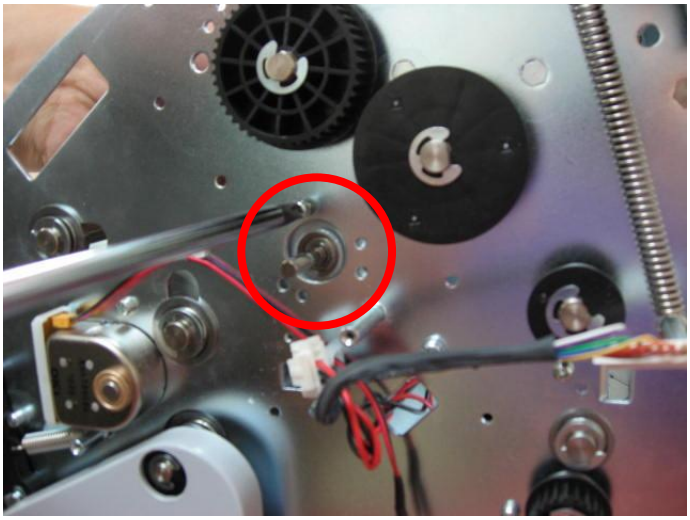

Pay attention to the holes of screw.

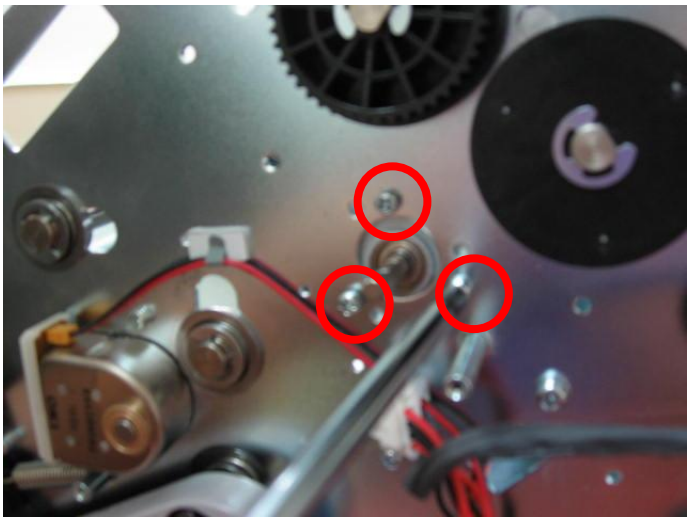

22) After putting Motor Cab to Main and Sub Motor.

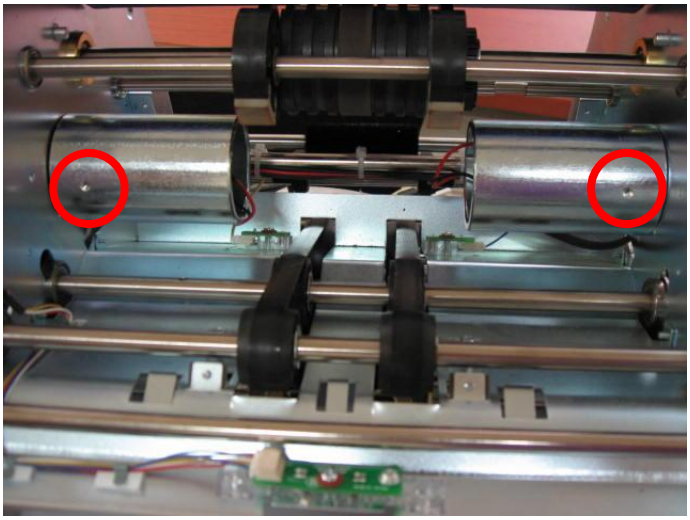

23) To fix Motor Cap to Motor, prepare 2 screws.

24) Match hole of Motor Cap and Main Motor.

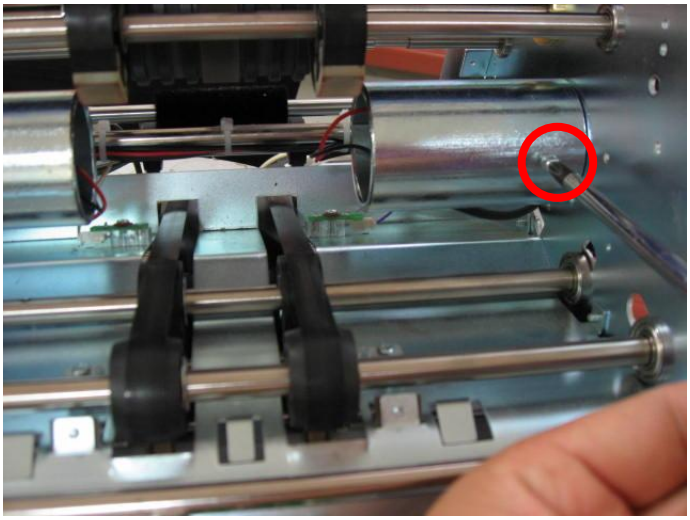

25) After seize Motor Cap, tighten screw.

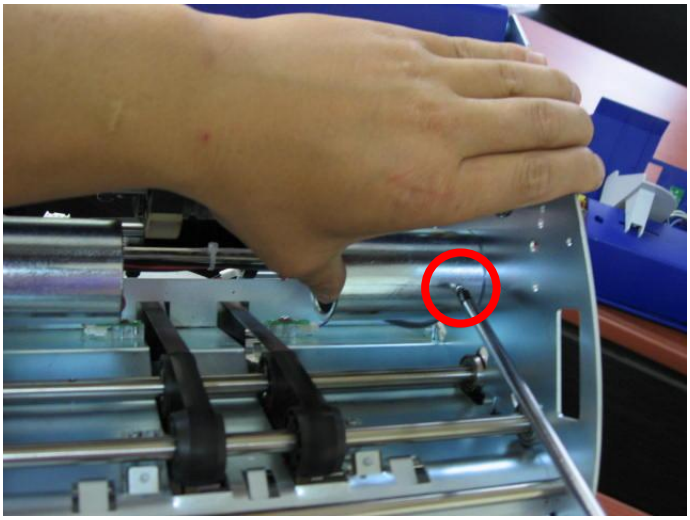

26) Match hole of Motor and Sub Motor.

27) Tighten screw.

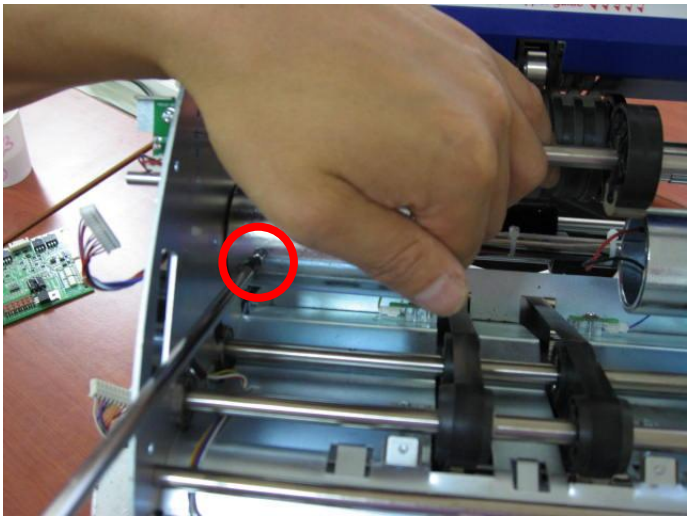

28) Fixed Motor Caps for two motors.

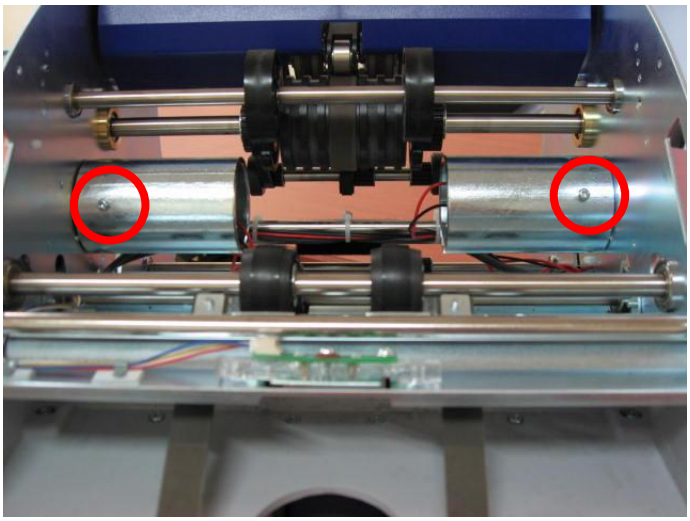

29) Go to Right Side of machine.

30) Put Gear B to Main Motor.

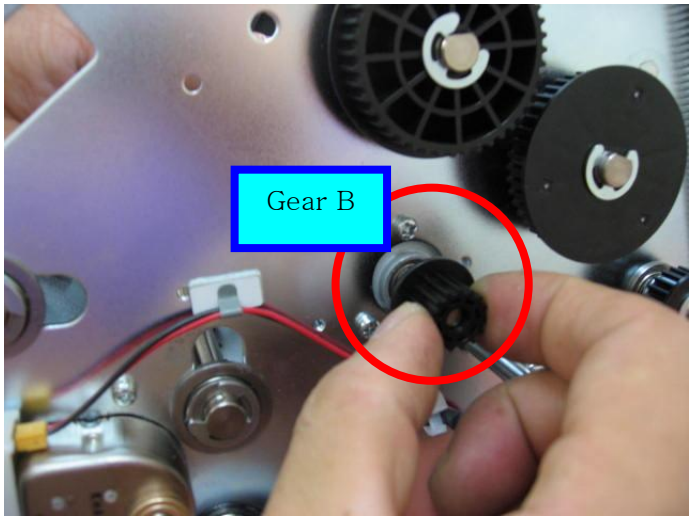

31) Put MAIN MOTOR BELT as picture.

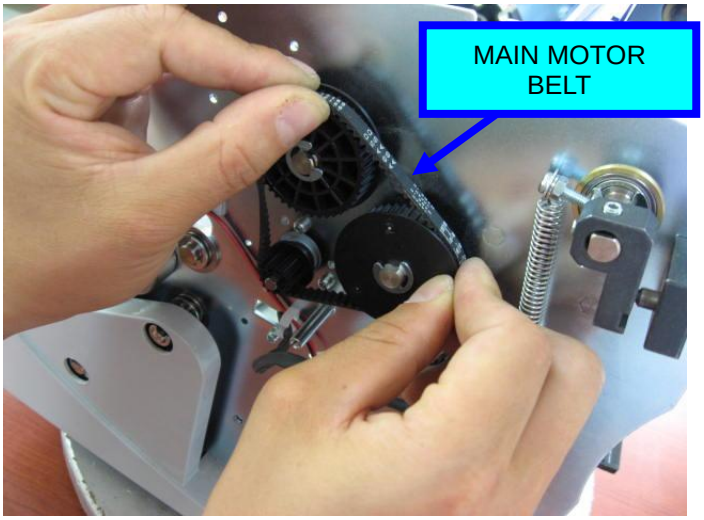

When you assemble Belt A to machine, please refer to attachment, How to assemble MAIN MOTOR BELT.

32) Try to move Belt A which works properly.

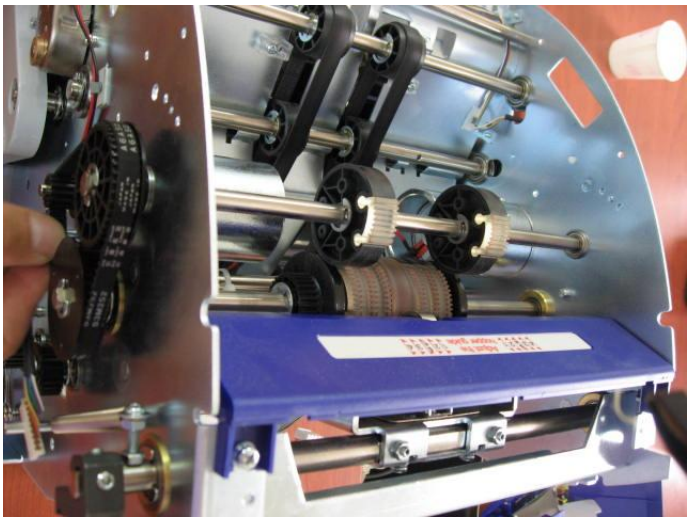

33) Go to Left Side of machine.

34) Put Gear C to Sub Motor.

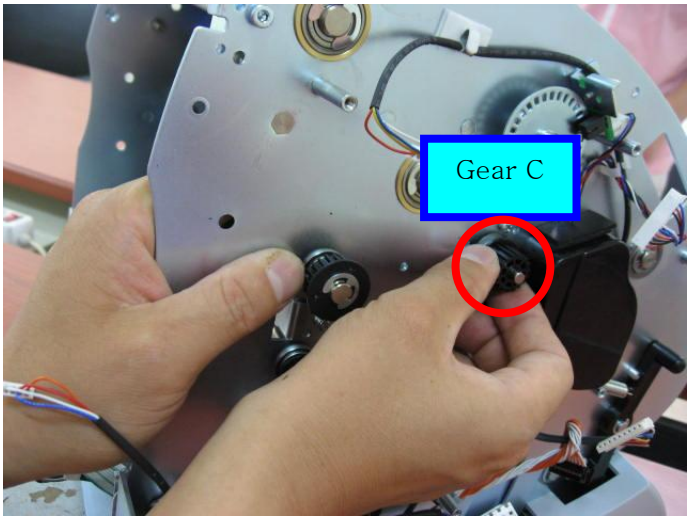

35) Put Belt B which was removed step 2-23).

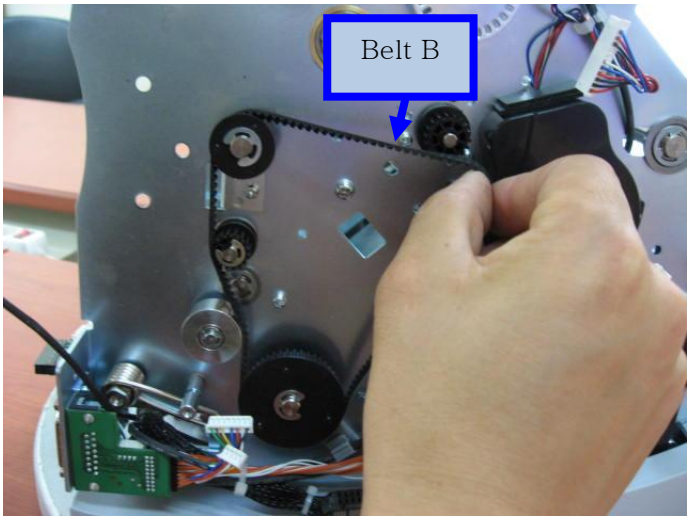

36) Release screw A slightly.

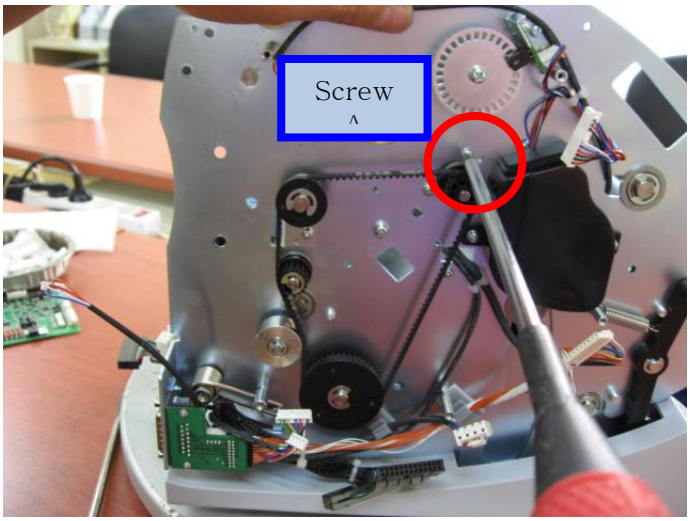

37) Push up Gear A

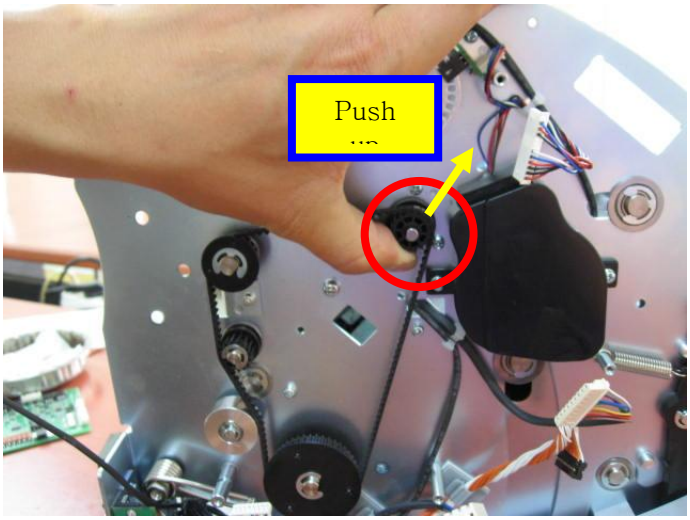

This step is very important.
After hang the belt, to adjust tension of belt, you have to tighten again screw A.
If the tension of belt is strong, machine will make noise. If tension is weak, machine makes error.

38) Tighten screw A during pushing up Gear C.

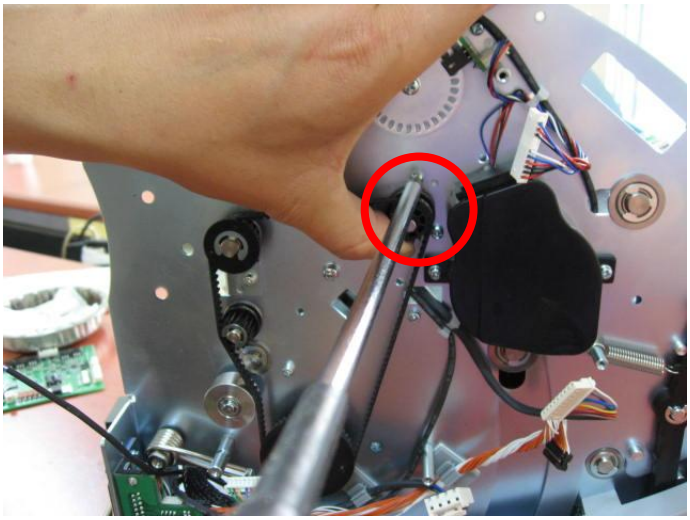

39) Put Front Cover to machine.

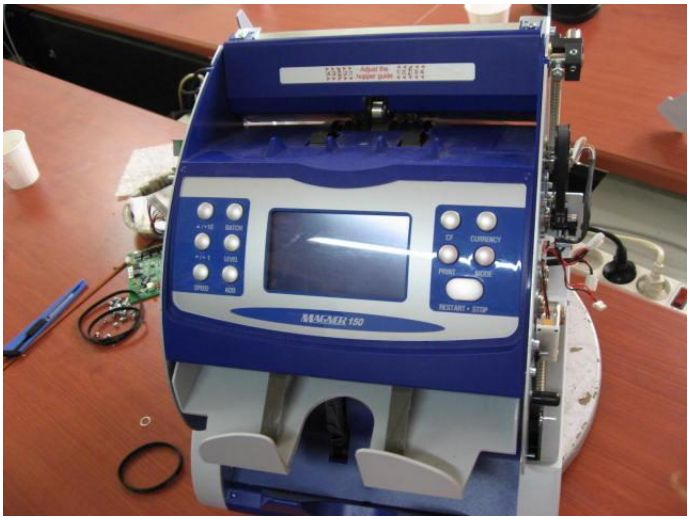

40) Tighten screw A to fix Front Cover.

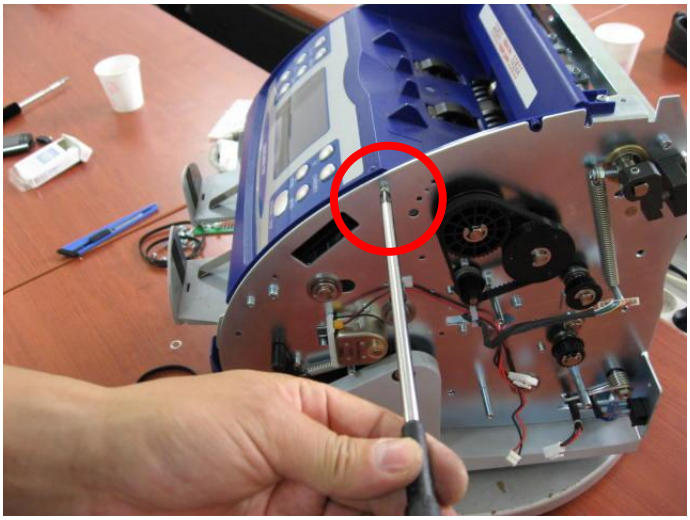

41) Tighten screw B to fix Front Cover.

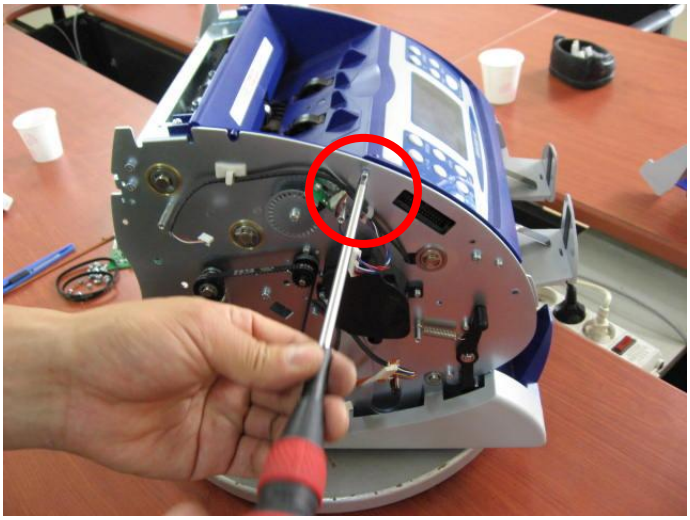

42) Put Belt which was removed step 2-15)

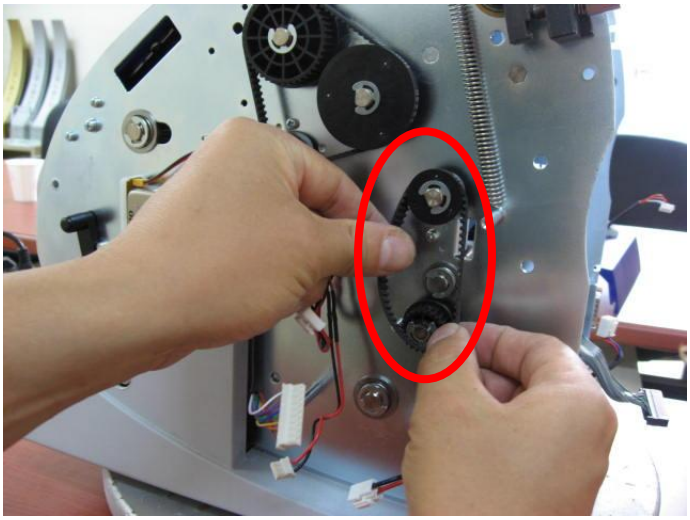

43) Assemble Motor Drive Board by tightening 4 screws.

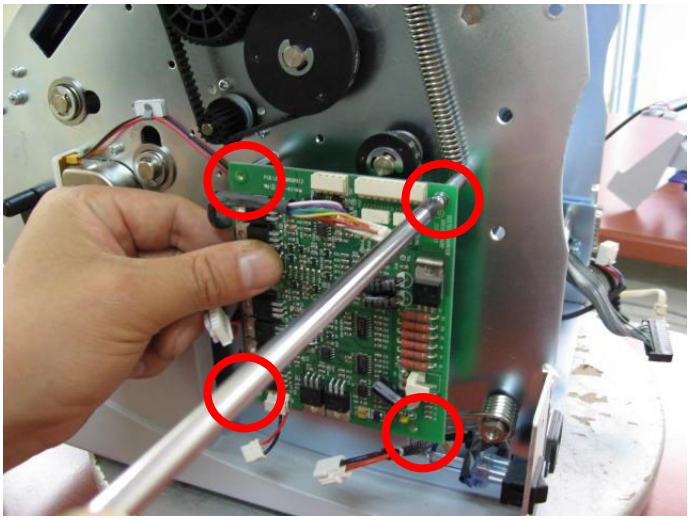

44) Connect all harnesses which are on Motor Drive Board.

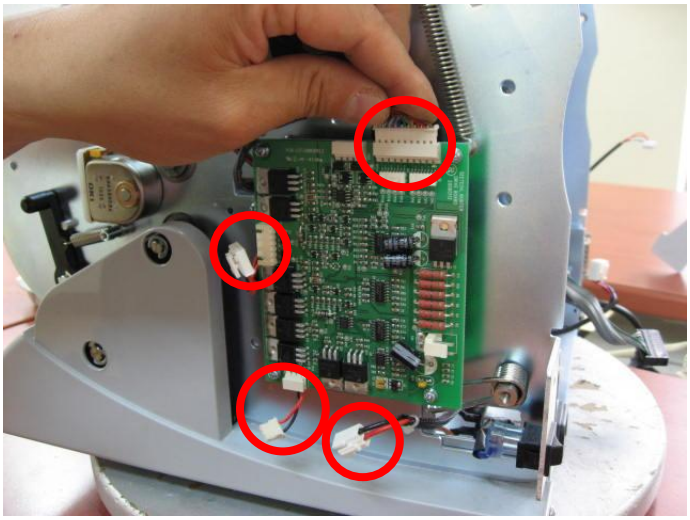

45) Assembled Motor Drive Board

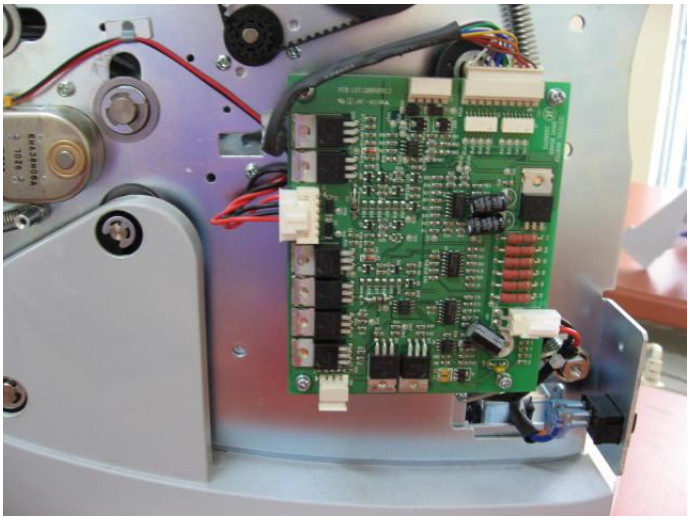

46) Prepare Main Board and shield.

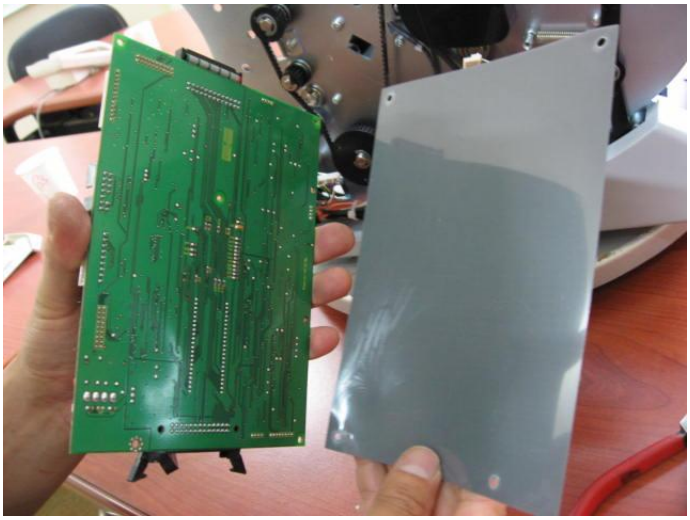

Both sides of shield are different. Plastic side must touch Main board!!

47) After put shield to machine, put Main Board and tighten 4 screws.

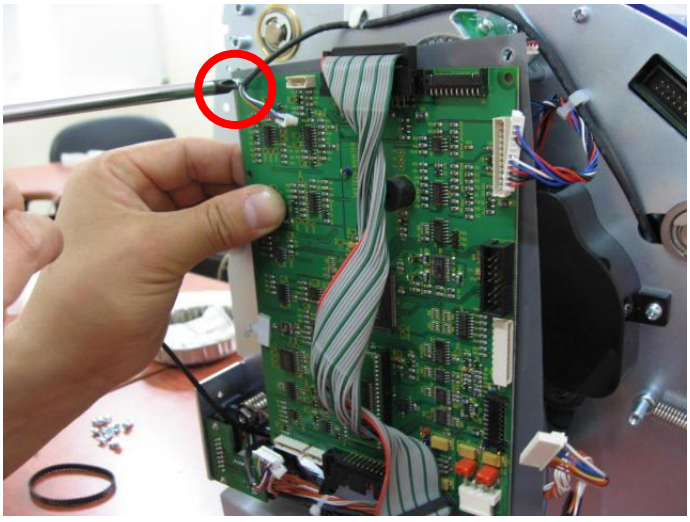

48) Connect all harnesses which are on Main Board.

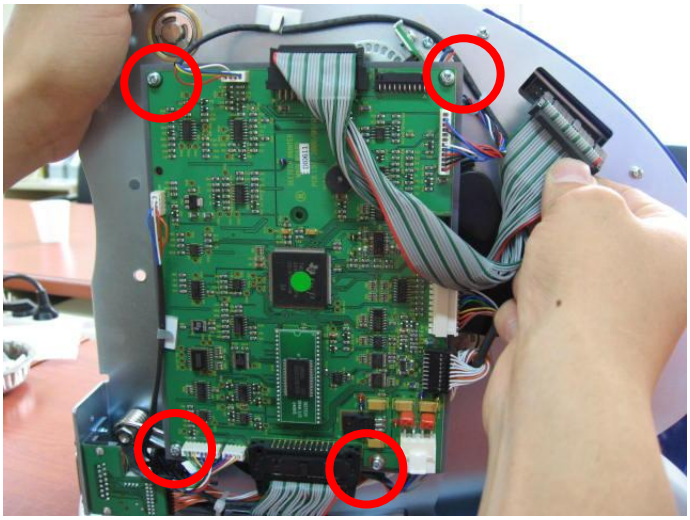

49) Put Hopper Guide Cover to machine.

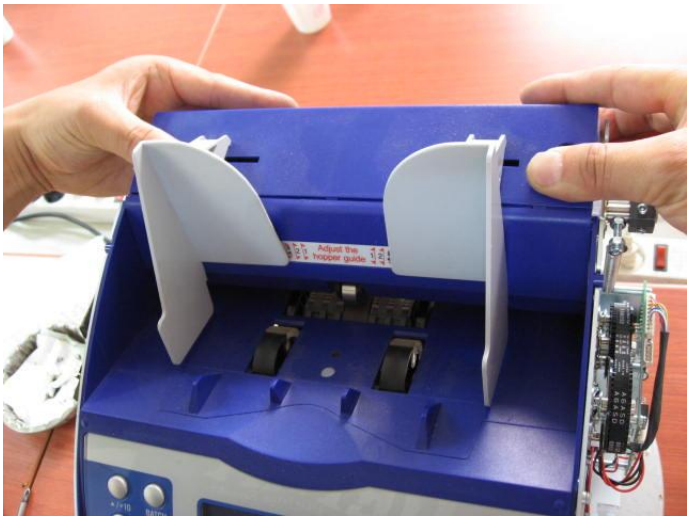

50) Check Hopper Guide Cover is matched properly.

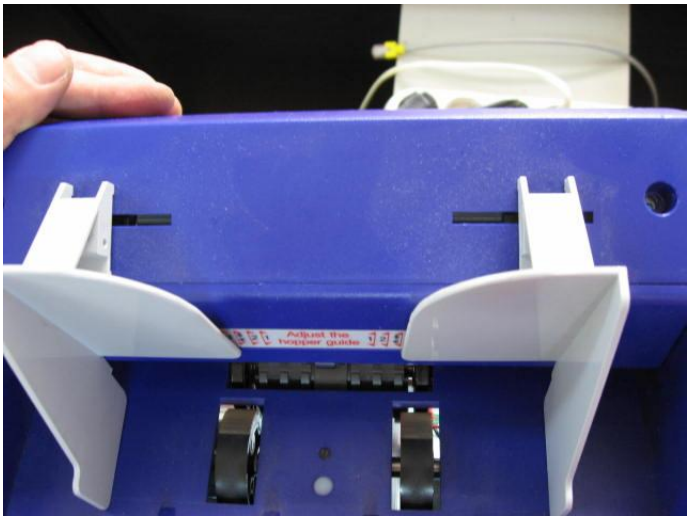

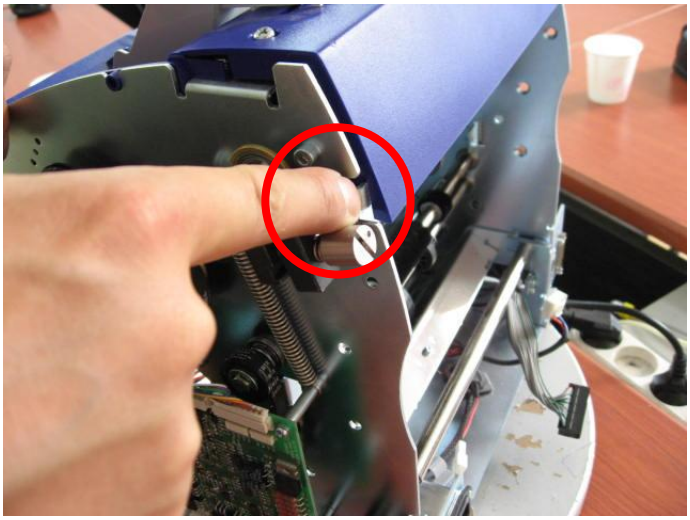

51) Fix Hopper Guide Cover by tightening 2 screws.

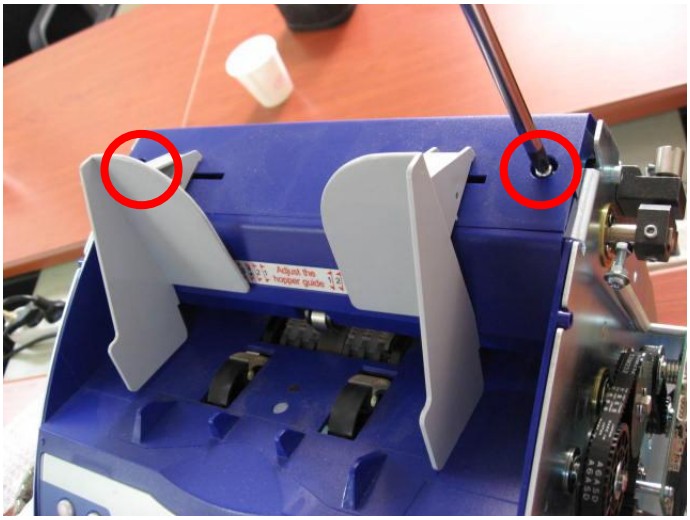

4. Replace Side MG Sensor Board, CF-IR Main Board and etc

1) Prepare Detector Module.

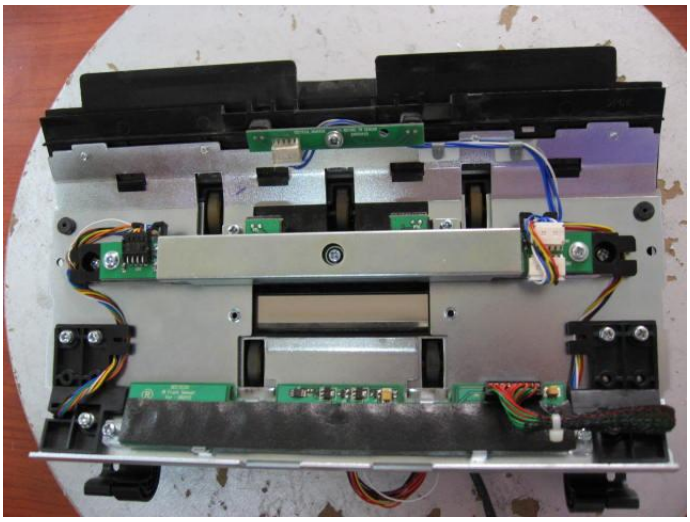

2) Remove screw A and B to separate CF Front Sensor Board from Detector Module.

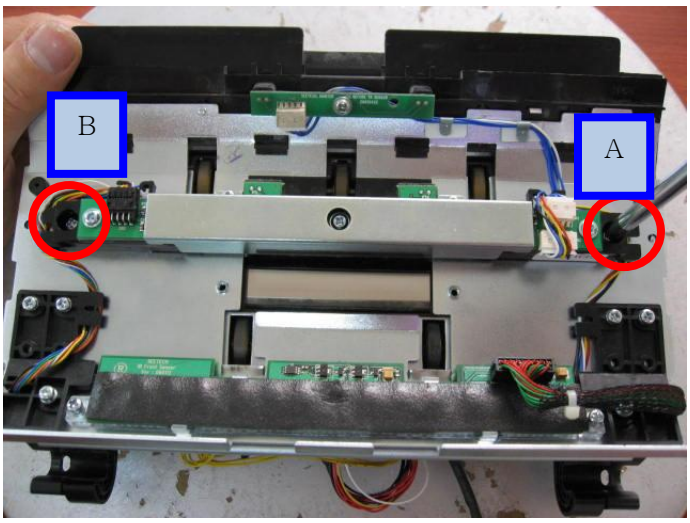

3) Remove screw C and D.

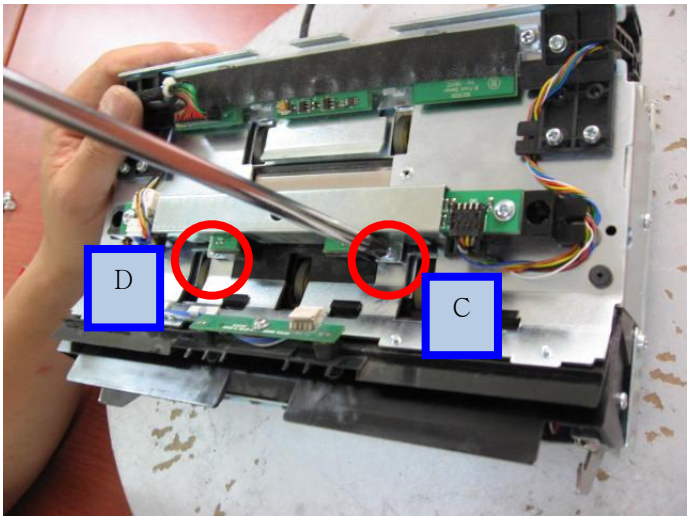

4) Separate harnesses as picture.

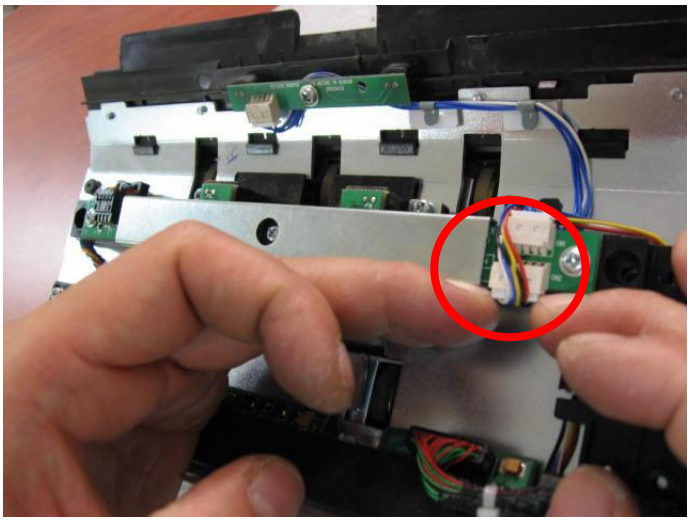

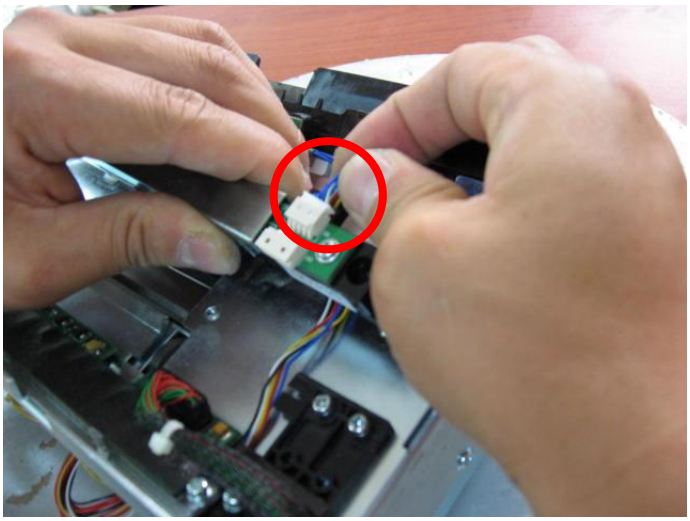

5) Separate CF Front Sensor Board from Detector Module.

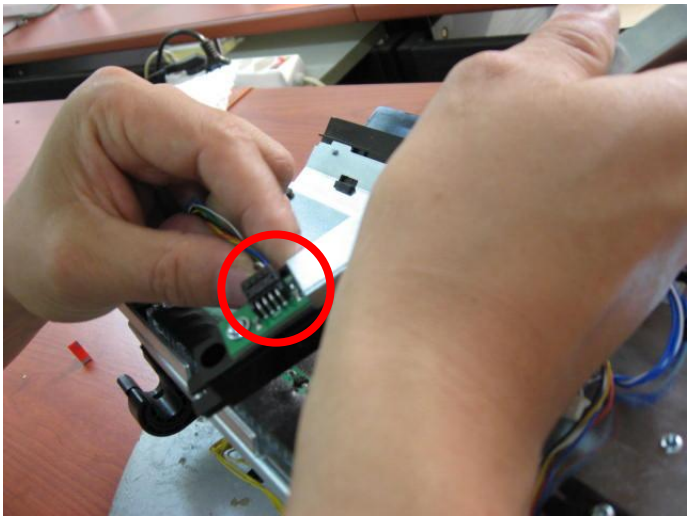

6) Separated CF Front Sensor Board.

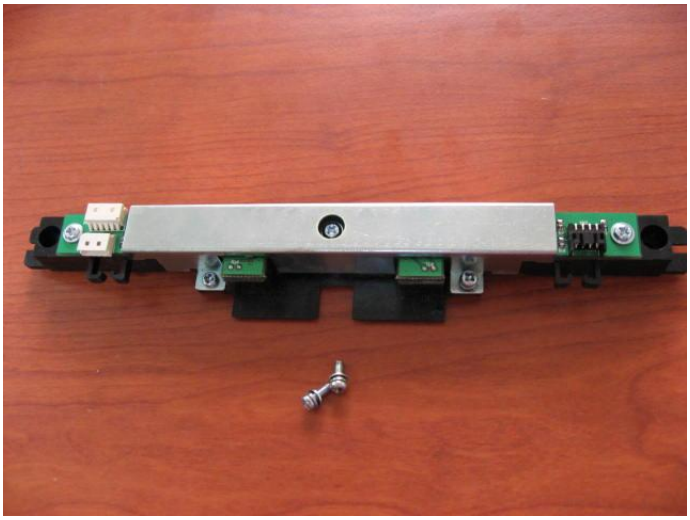

7) Separate IR Front Sensor Harness.

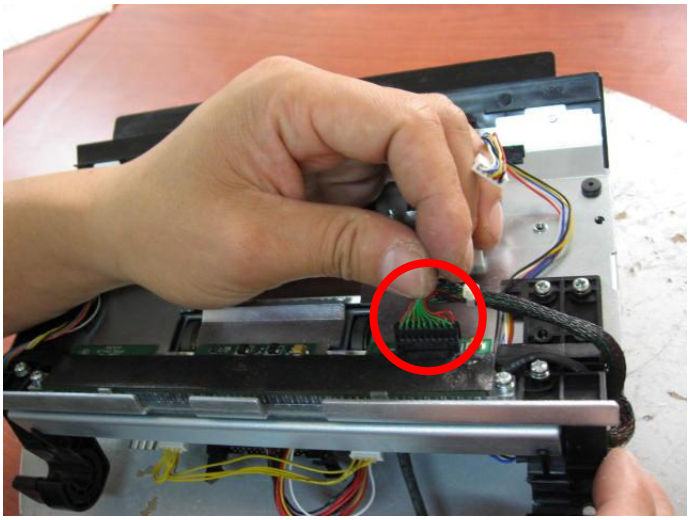

8) Remove screw E and F to separate IR Front Board from Detector Module.

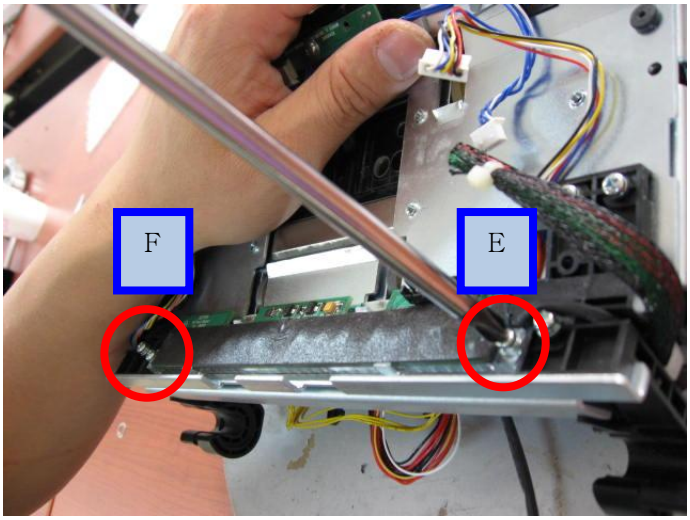

9) Separated IR Front Board.

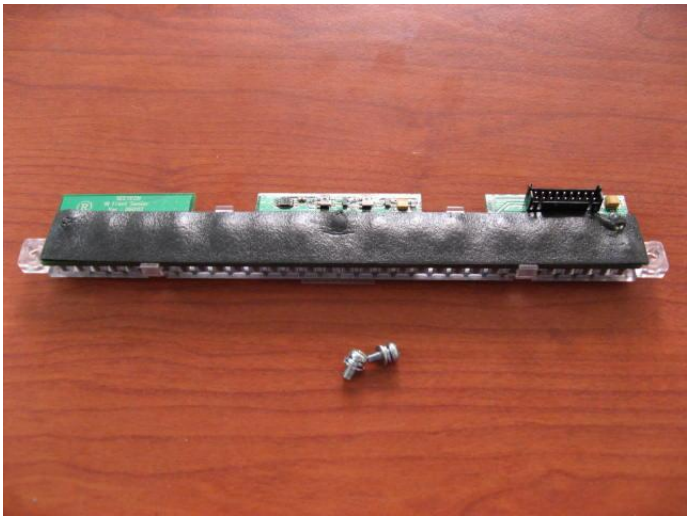

10) Remove screw G and H.

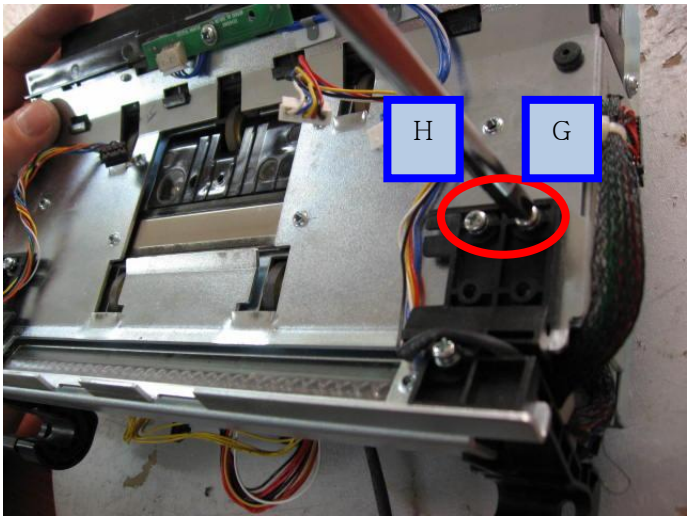

11) Remove screw I and J.

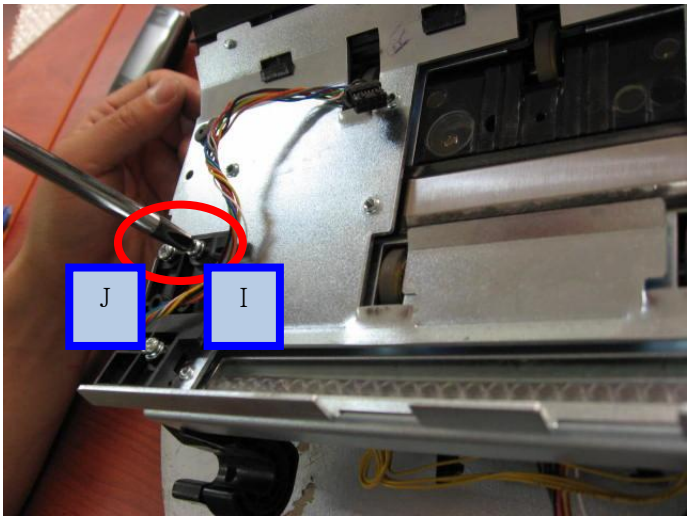

12) Lift up Detector Lower Right Hinge as picture.

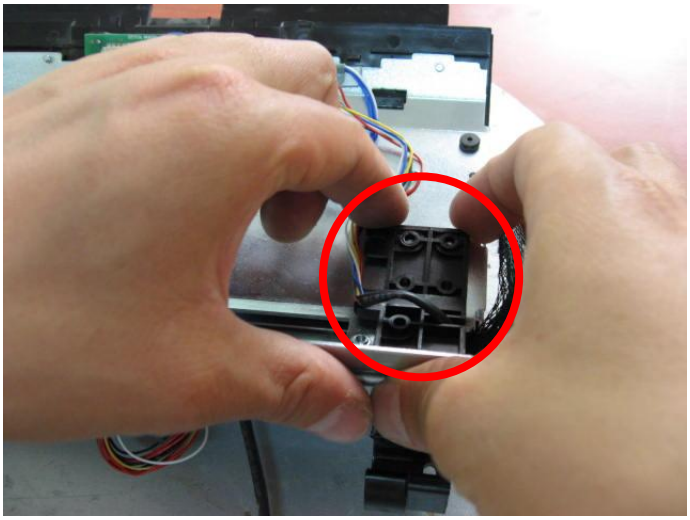

13) Take out harness as picture.

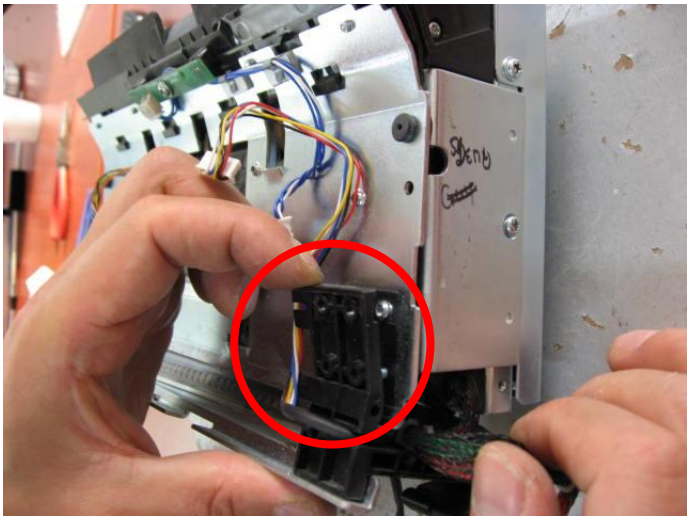

14) Lift up Detector Lower Left Hinge as picture.

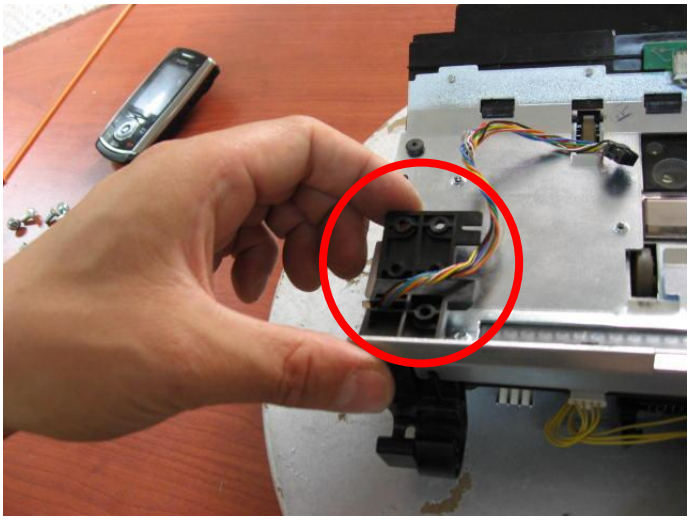

15) Take out harness as picture.

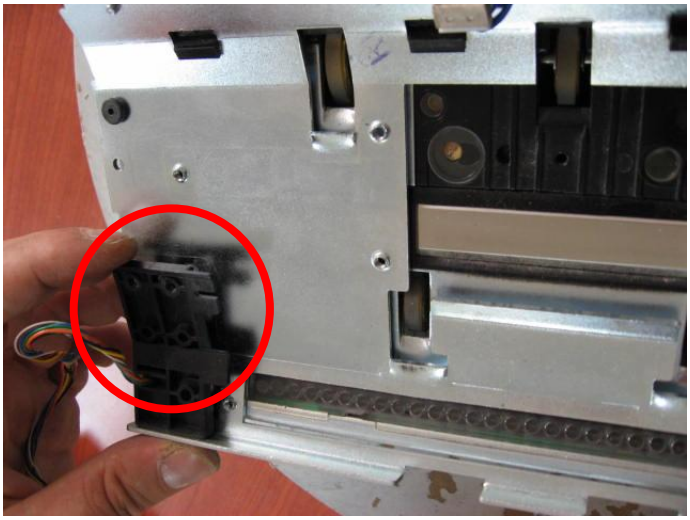

16) After taking out harness

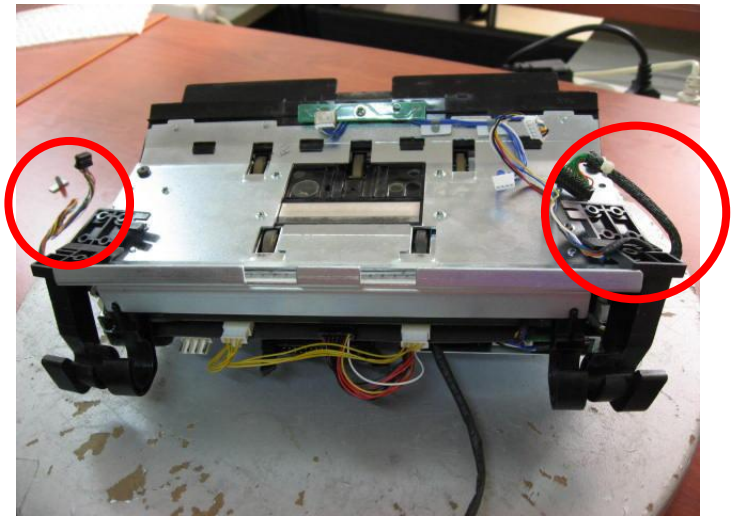

17) Separate Detector Lower Right and Left Hinge.

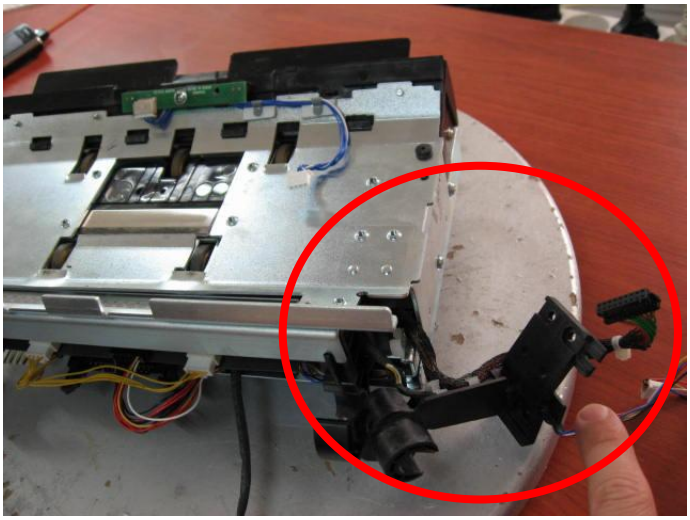

18) Detector Front Plate is separated.

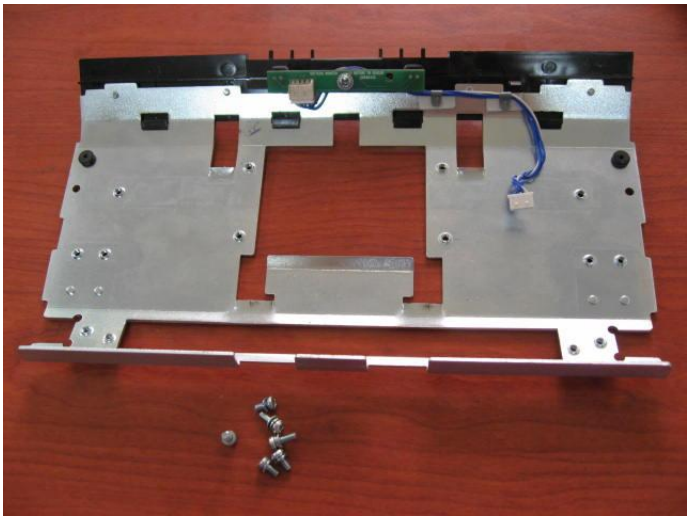

19) To separate CIS Reflector, remove 4 screws.

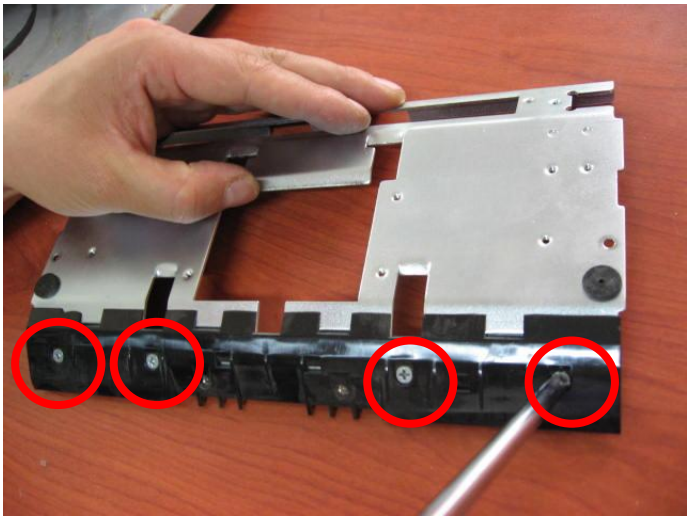

20) Go to opposite side of Detector Front Plate.

21) Lift up metal clamps to take out harness

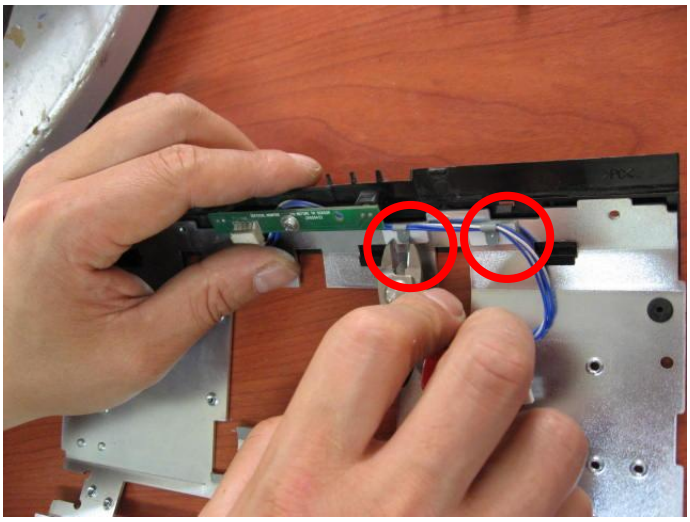

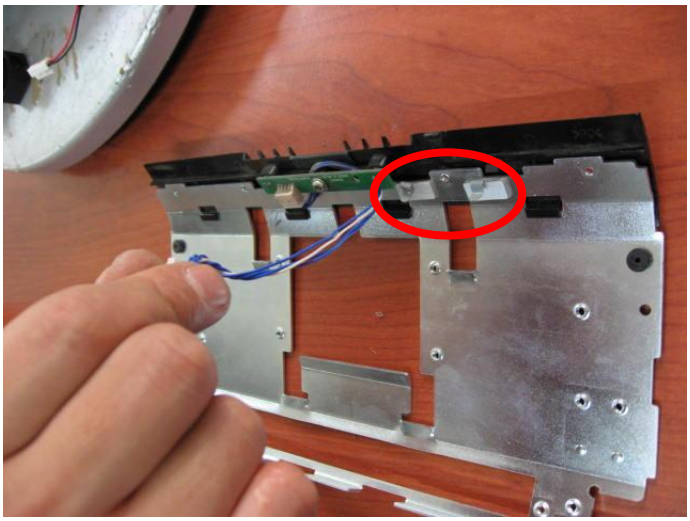

22) Separate CIS Reflector as picture.

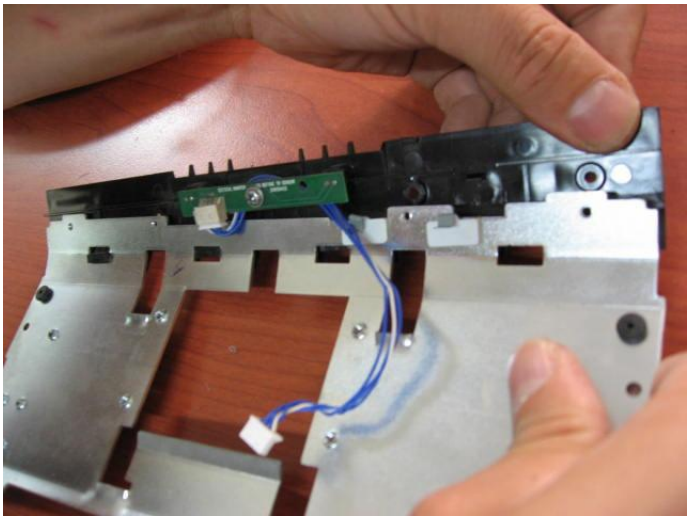

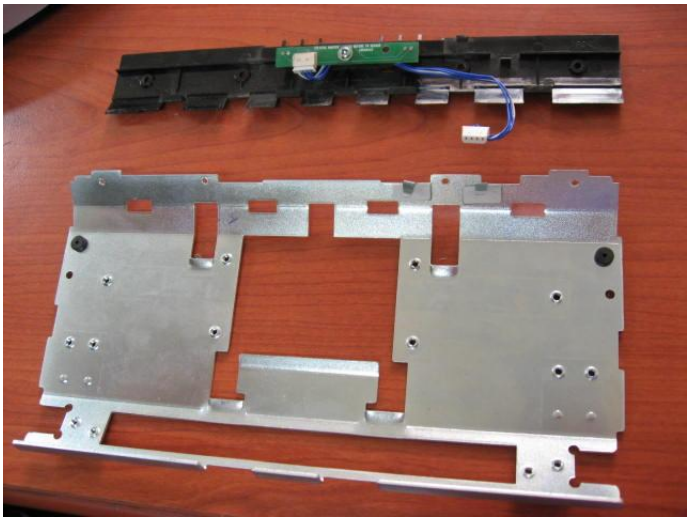

23) Remove Detector Rubber.

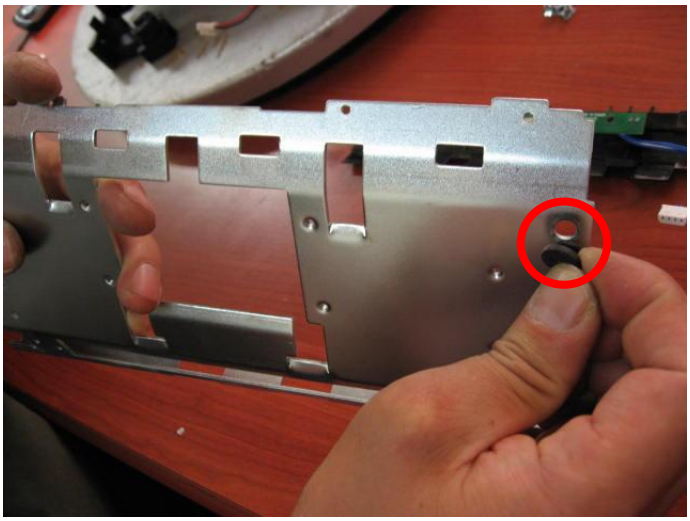

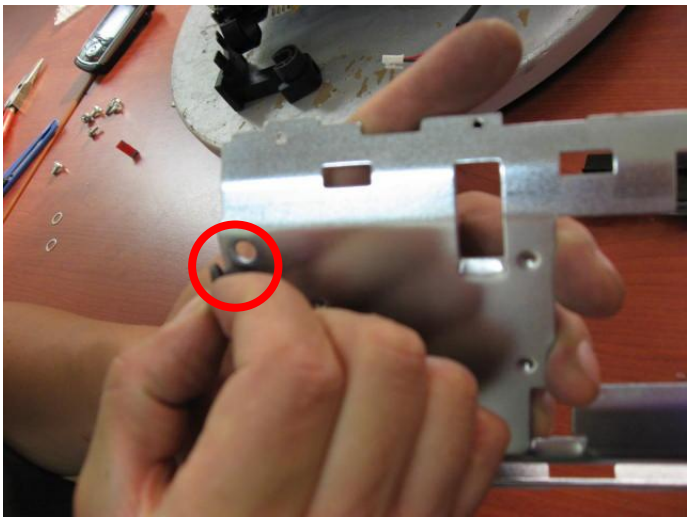

24) Prepare Detector Front Plate for Side MG sensor.

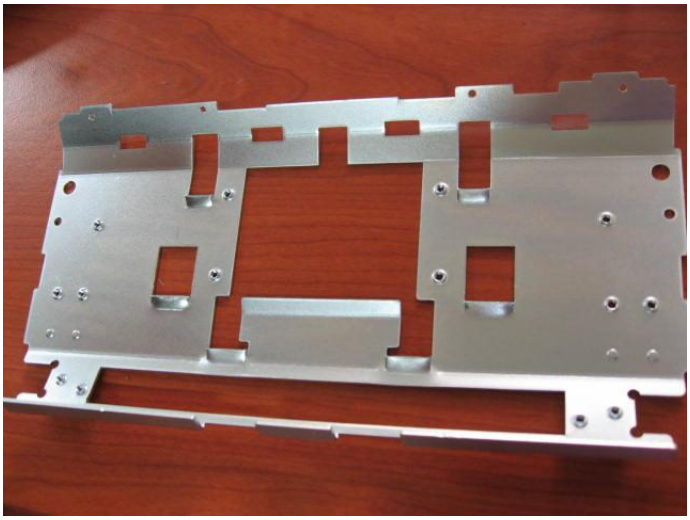

25) Put CIS Reflector to new Detector Front Plate.

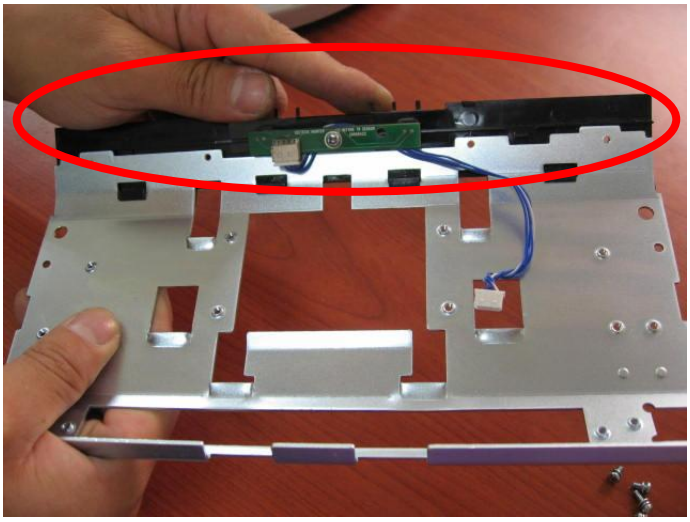

When put CIS Reflector, CIS Reflector must hug Detector Front Plate to the limit.

26) Fix CIS Reflector by tightening 4 screws.

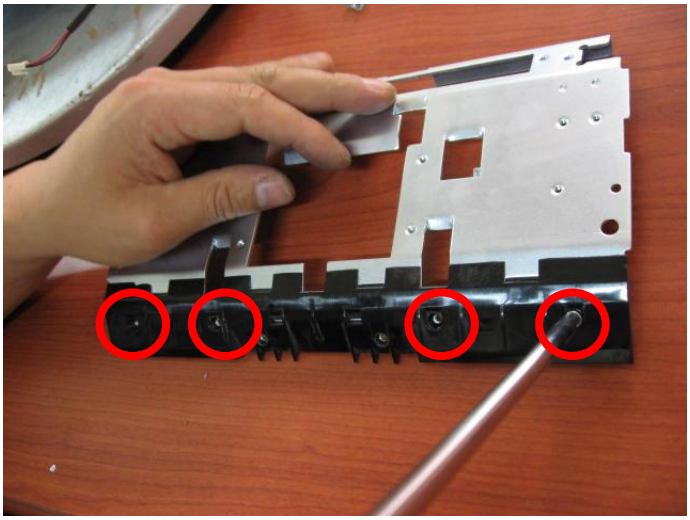

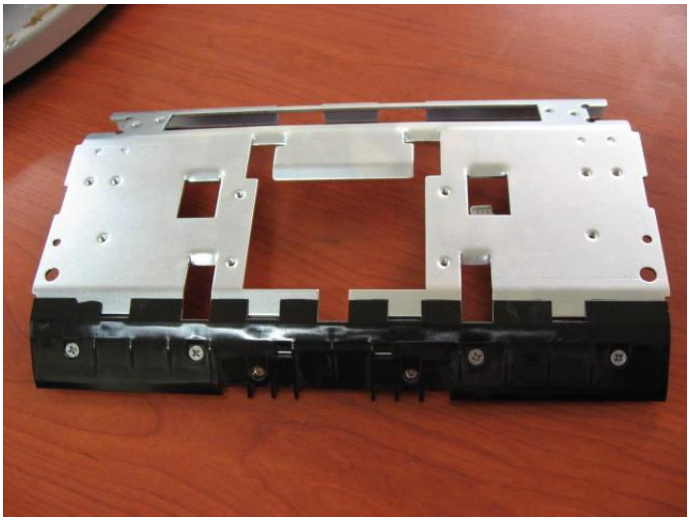

27) Insert Detector Rubbers to new Detector Front Plate.

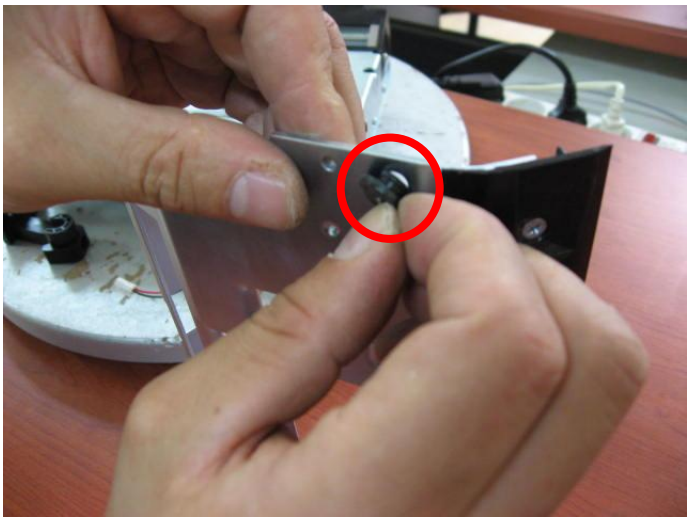

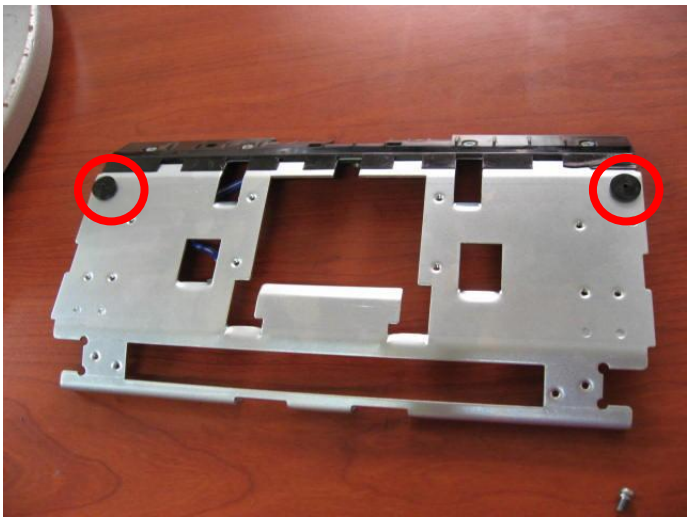

28) Put metal clamp to new Detector Front Plate.

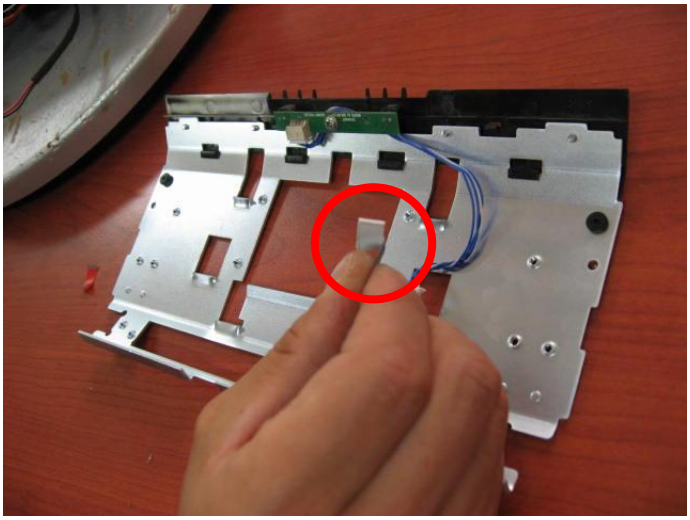

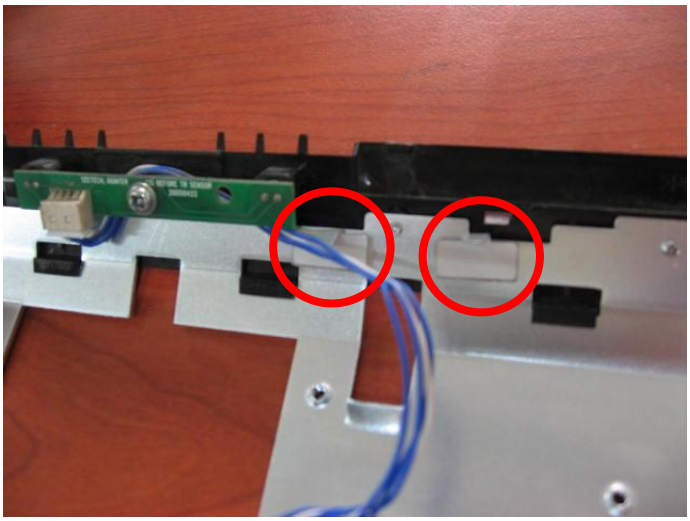

Pay attention to the position of metal clamp.

29) Fix harness to metal clamp.

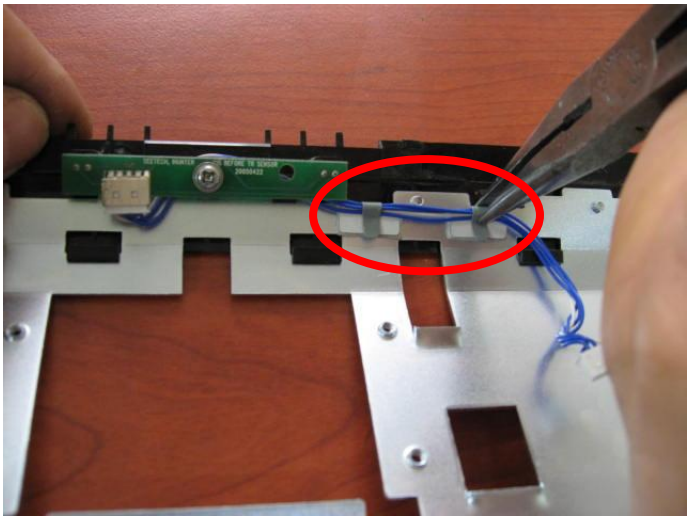

30) Put Detector Lower Left Hinge to new Detector Front Plate by matching holes.

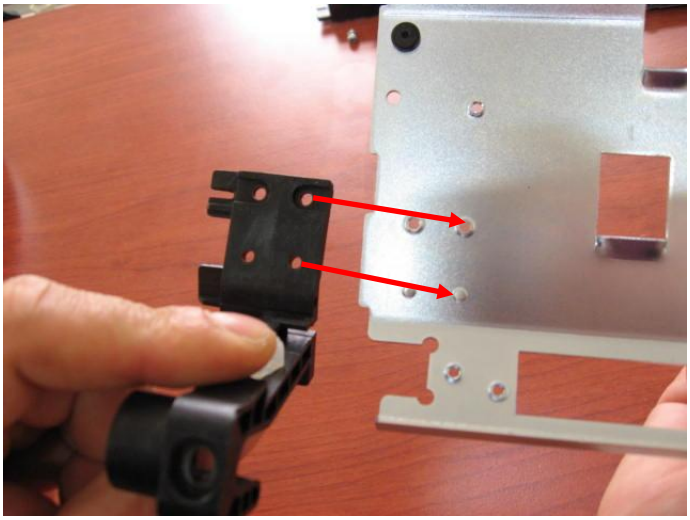

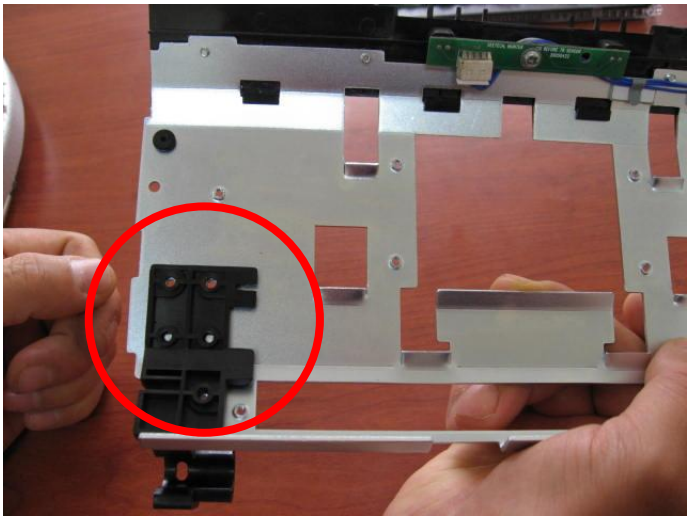

After put Detector Lower Left Hinge to Detector Front Plate, you have to check 4 holes of hinge are matched with 4 holes of Plate.

31) Fix it by tightening screws.

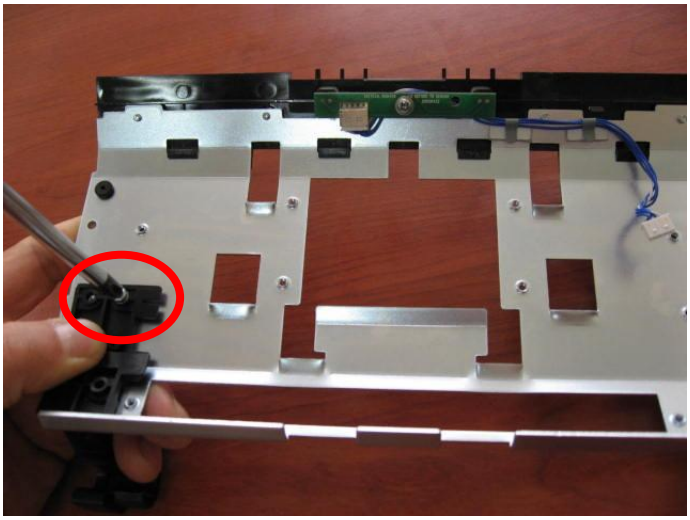

32) Put new Detector Front Plate to Detector Module.

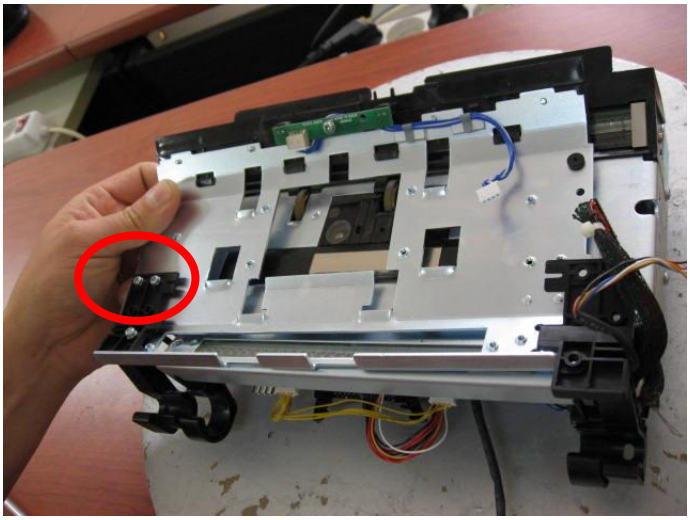

33) Put Detector Lower Right Hinge to new Detector Front Plate.

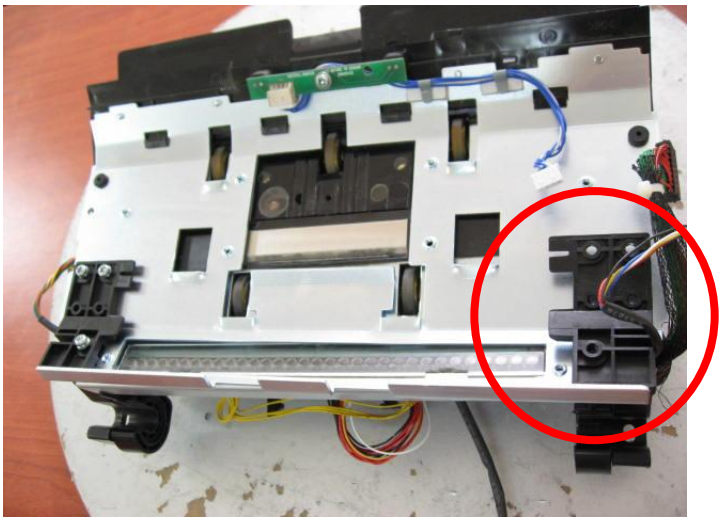

34) Insert harness to inside of Detector Lower Right Hinge

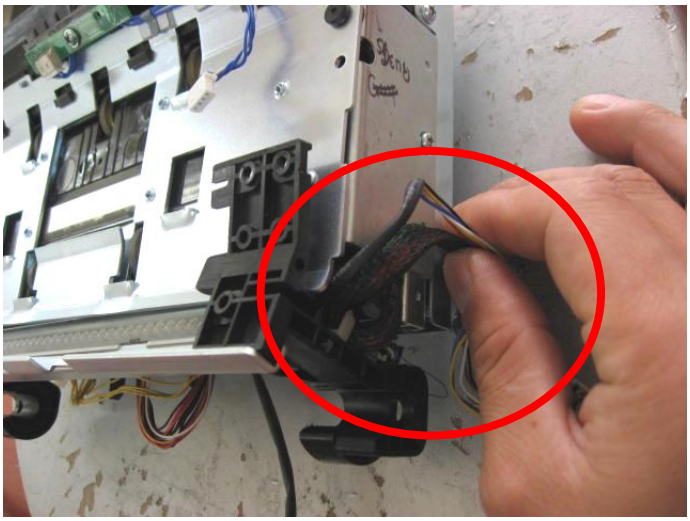

Arrange harnesses they don't come out Detector Lower Right Hinge. If harnesses go out from Hinge, when assemble Detector Module to machine, they can be cut easily. Please note!!!

35) Match Detector Lower Right Hinge to hole and fix it by tightening screws.

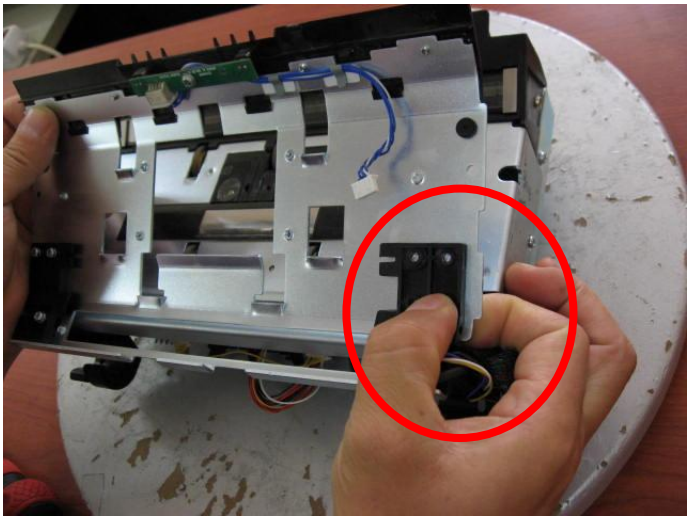

After put Detector Lower Left Hinge to Detector Front Plate, you have to check 4 holes of hinge are matched with 4 holes of Plate.

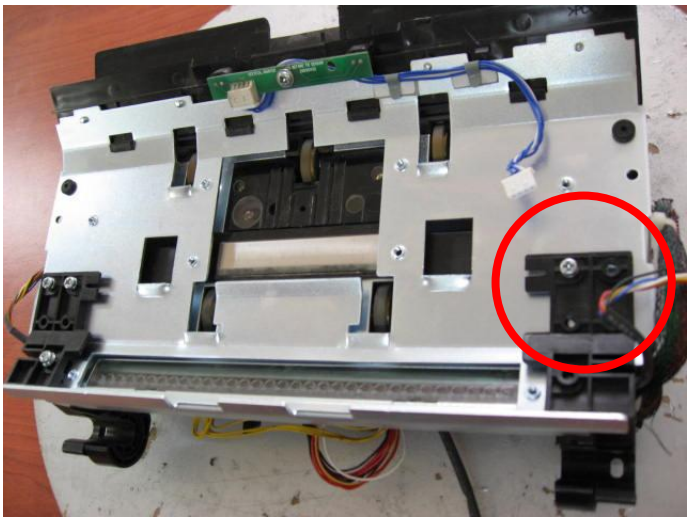

36) Go to opposite side. Push harness to inside of Detector Lower Left Hinge.

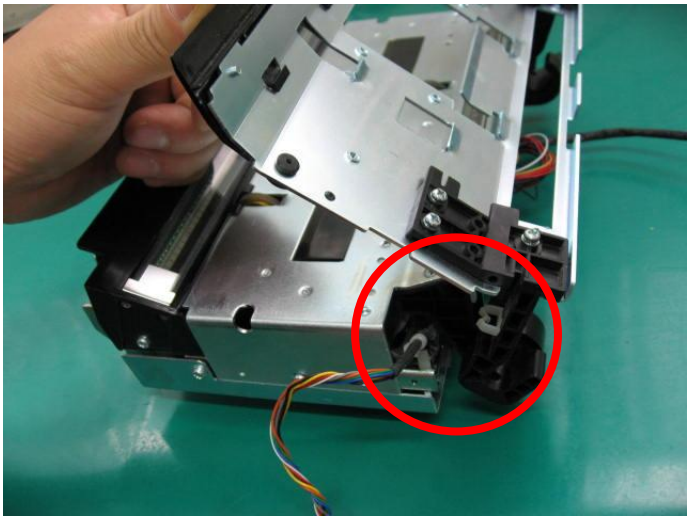

37) Inside view of Detector Lower Left Hinge

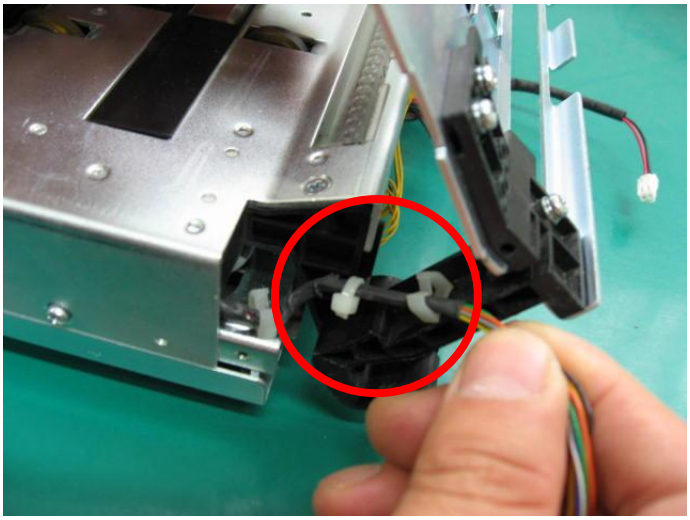

38) Put harness as picture.

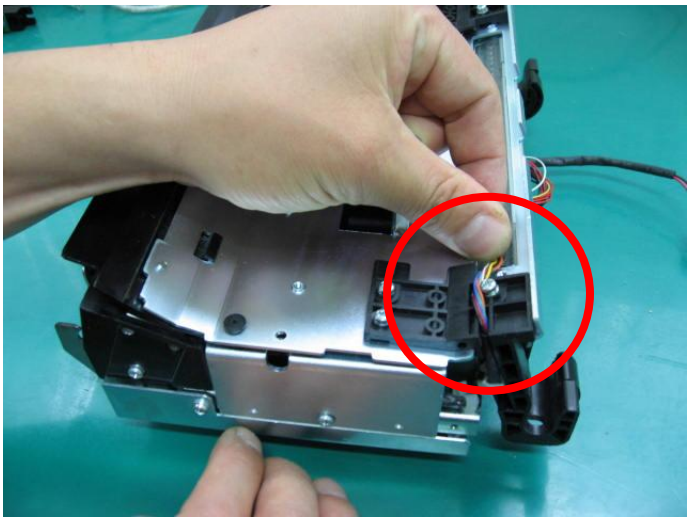

Pull harness tightly.

39) Go to Detector Lower Right Hinge.

40) Put harness as picture.

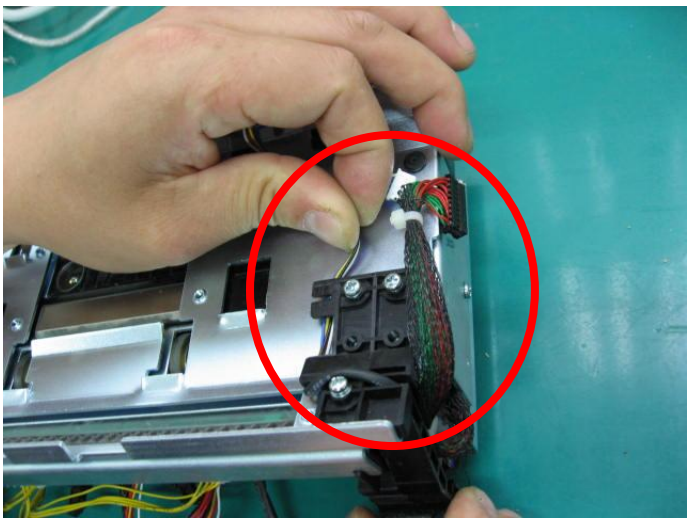

Pull harness tightly.

41) Put IR Front Board to Detector Front Plate.

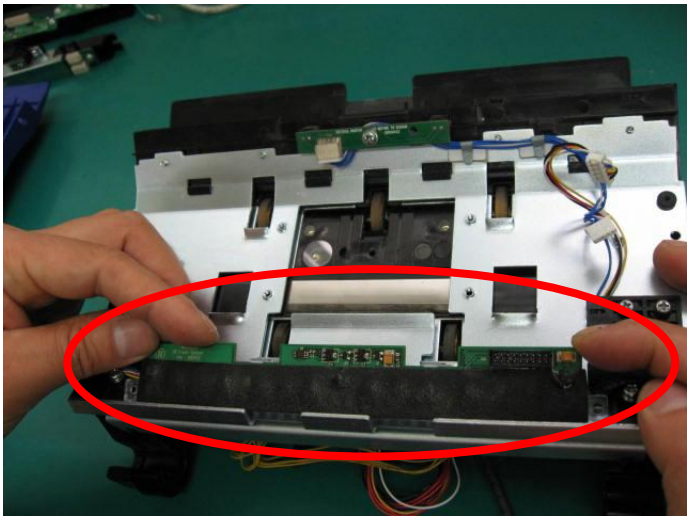

42) Fix it by tightening two screws.

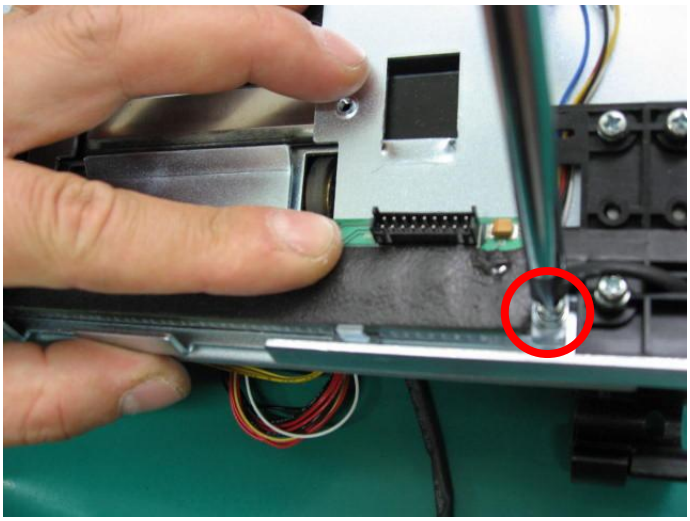

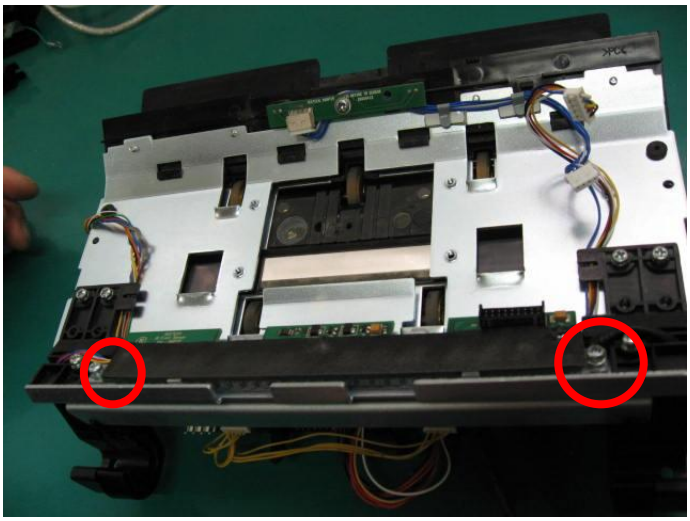

43) Put IR Front Sensor Board to Detector Front Plate.

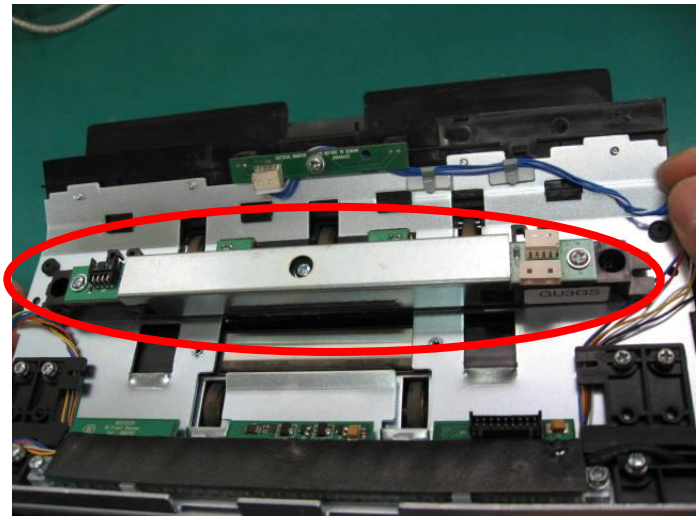

44) Fix it by tightening 2 screws.

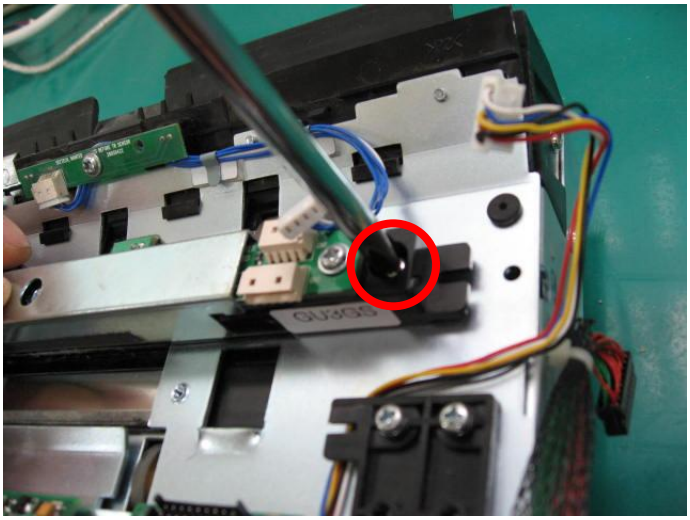

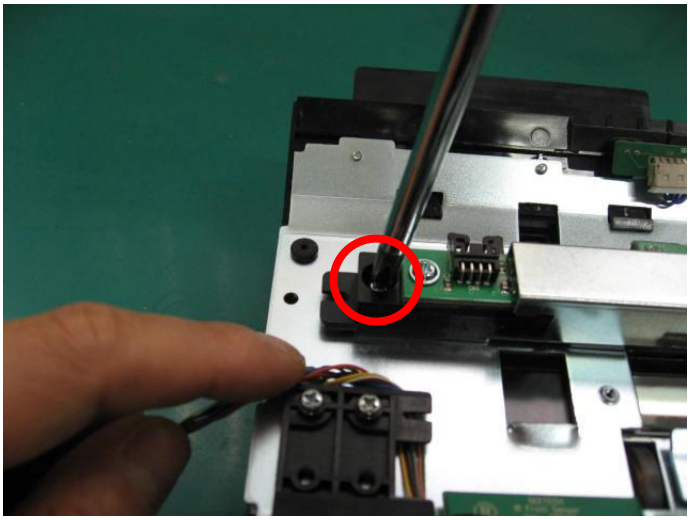

45) Fix Detector CF Cover by tightening 2 screws.

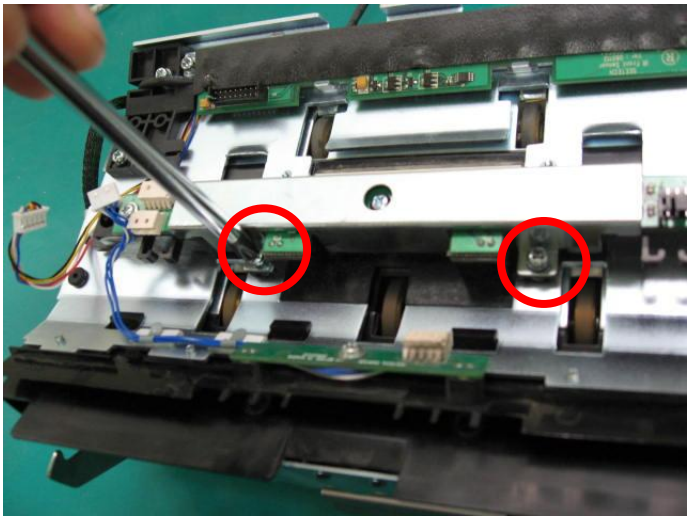

46) Put and connect harness as picture.

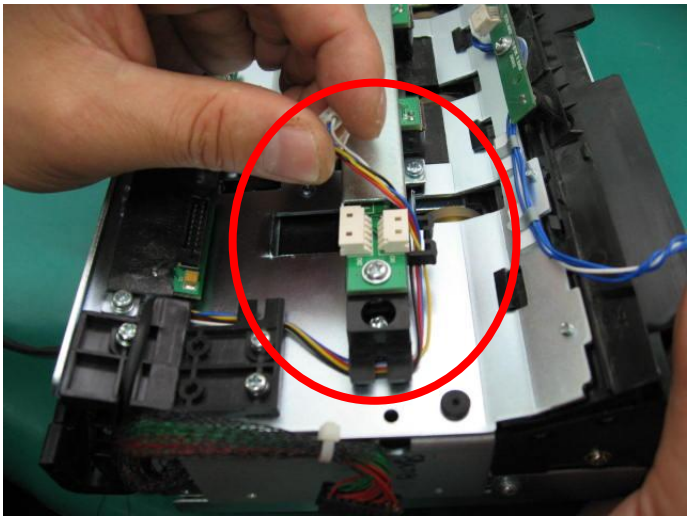

47) Put CIS Counter Sensor Harness to harness mount.

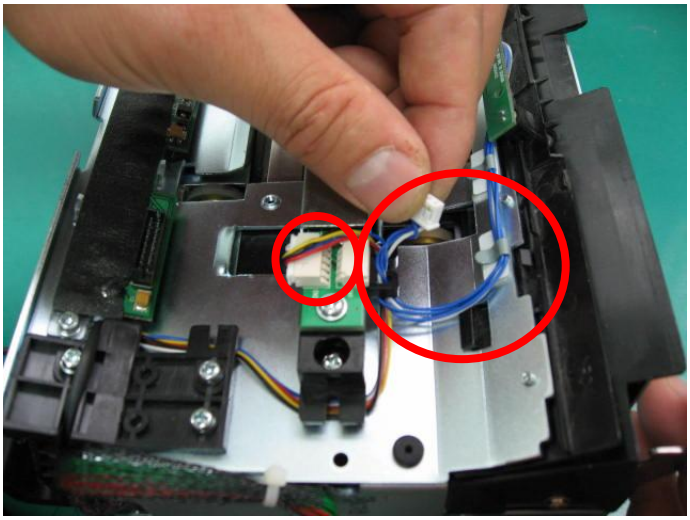

48) Connect CIS Counter Sensor Harness.

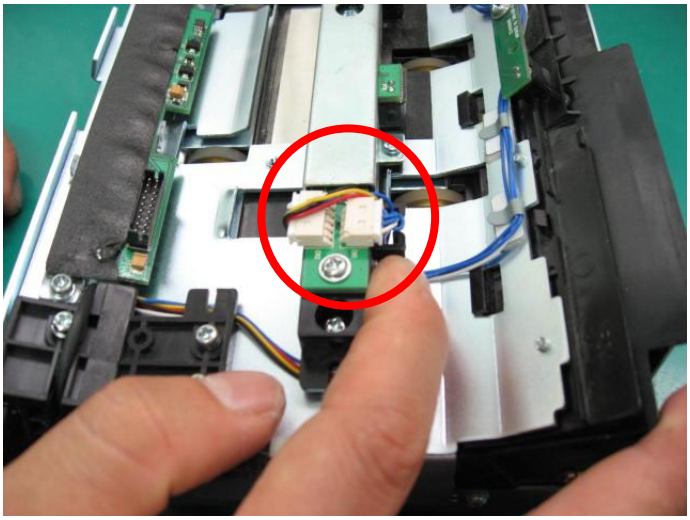

49) Connect Front Sensor Harness to CF Front Sensor Board.

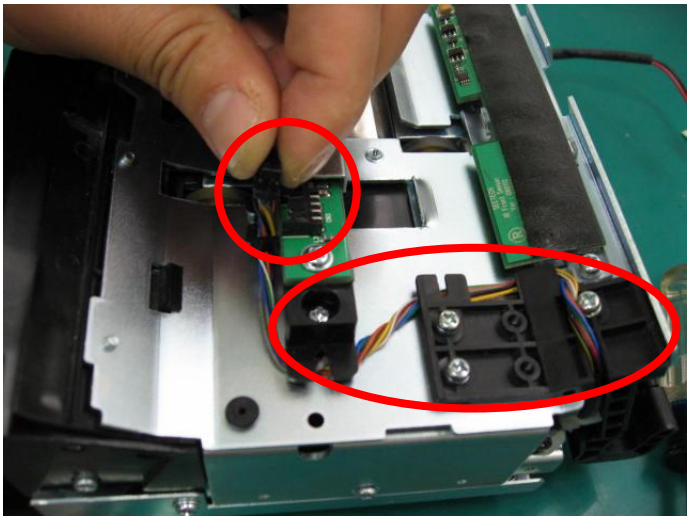

50) Connected view.

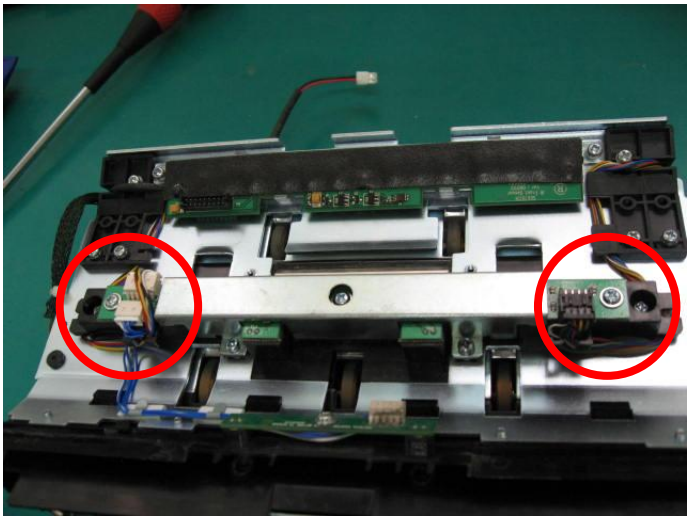

51) Connect IR Front Sensor Harness as picture.

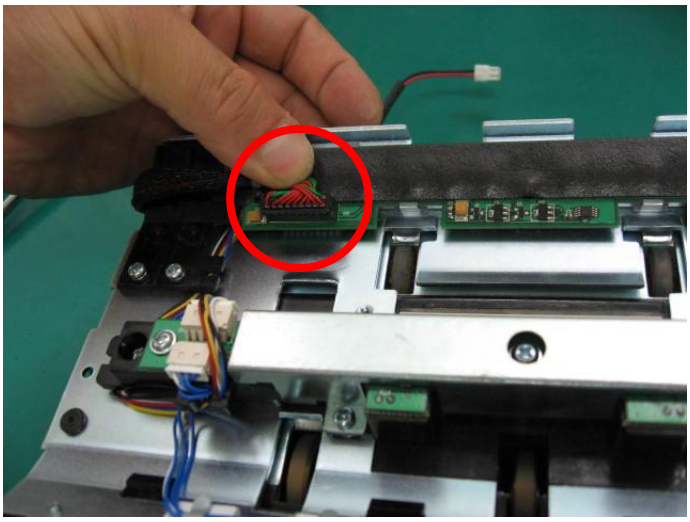

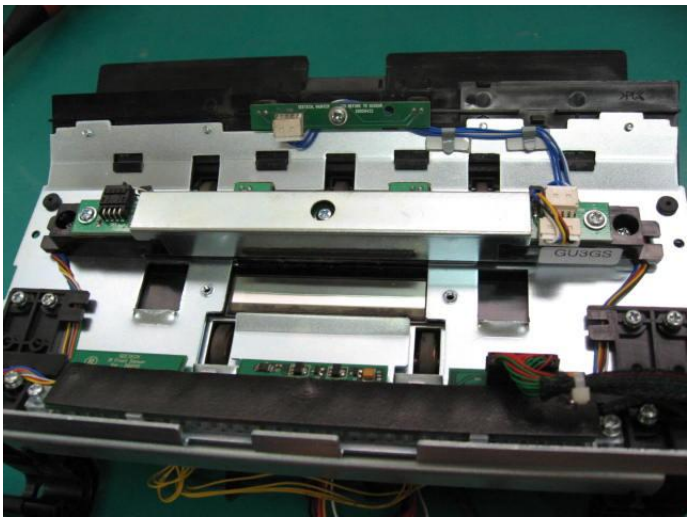

52) Go to rear side of Detector Module. Remove 2 screws.

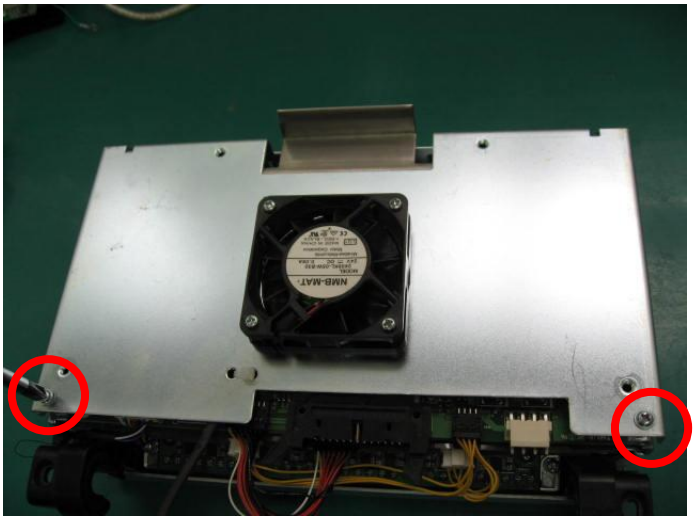

53) To remove Detector Cover Plate, remove screws on side of Detector Module.

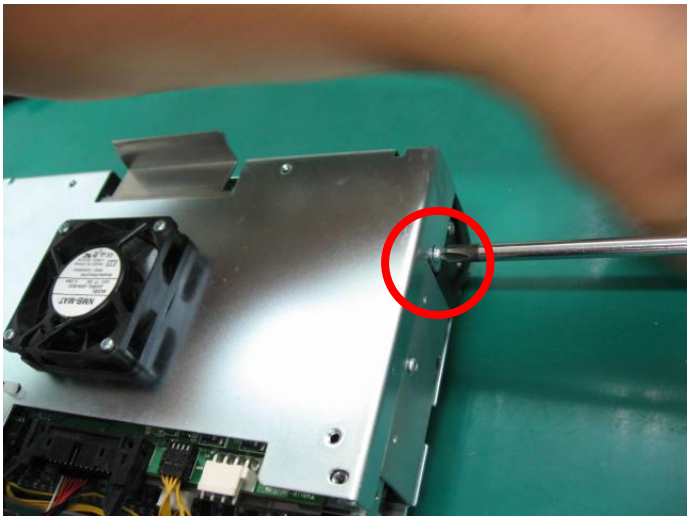

54) Separated Detector Cover Plate.

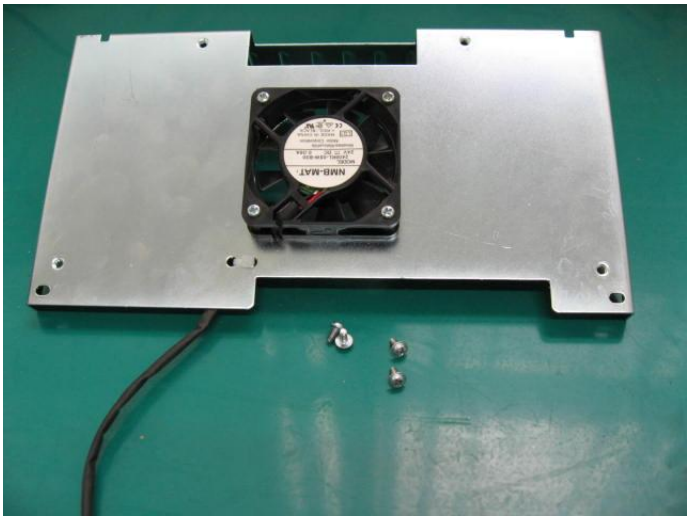

55) Separate all harnesses which are connected to CIS 2 main board.

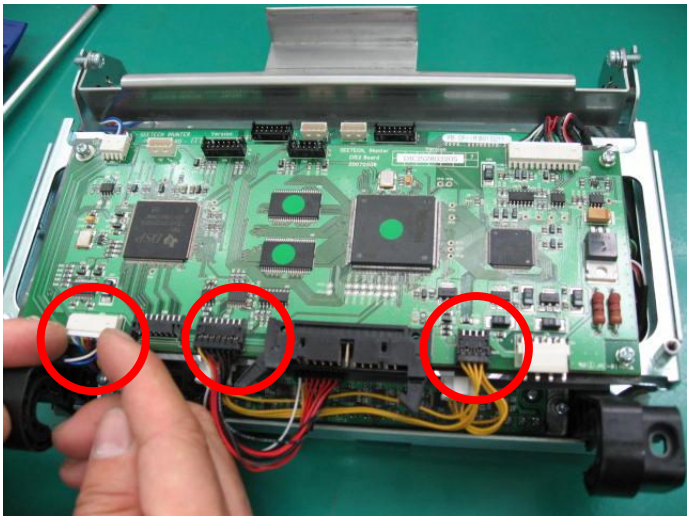

56) Remove 4 screws and separate CIS 2 main board.

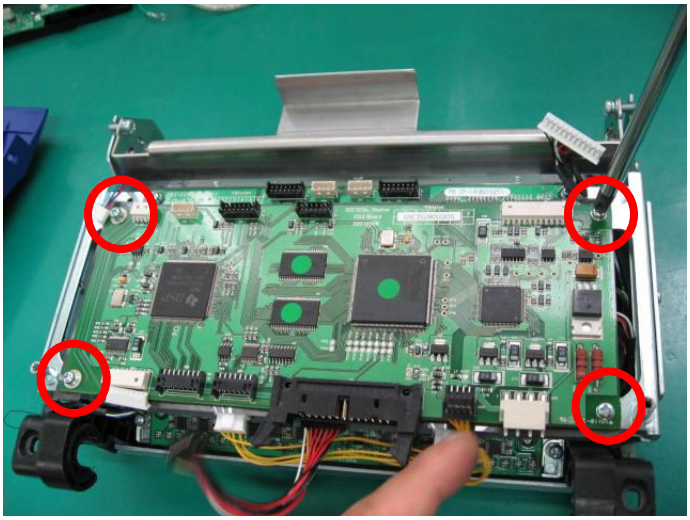

57) Separated CIS 2 main board.

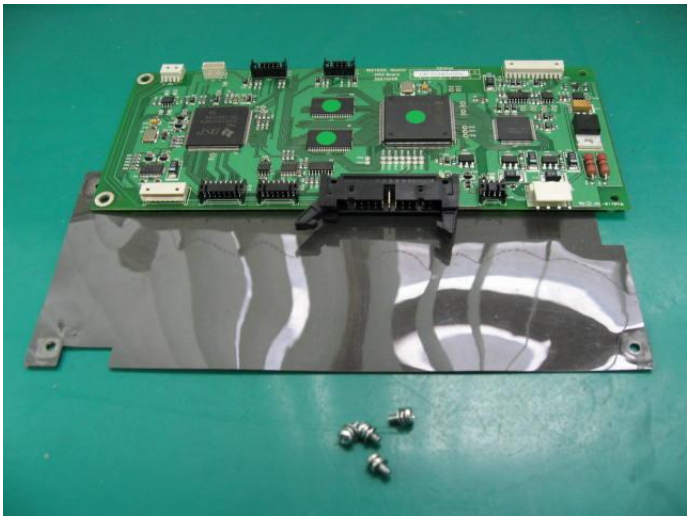

58) Remove 4 screws for separating CF-IR main board.

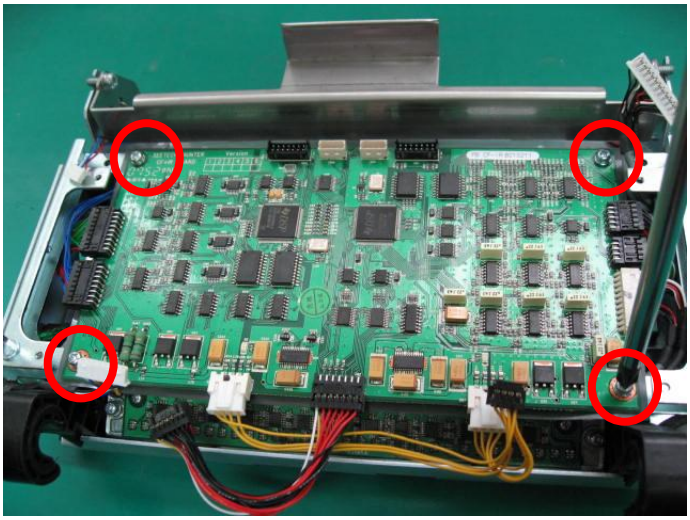

59) Separate all harnesses which are connected to CF-IR main board.

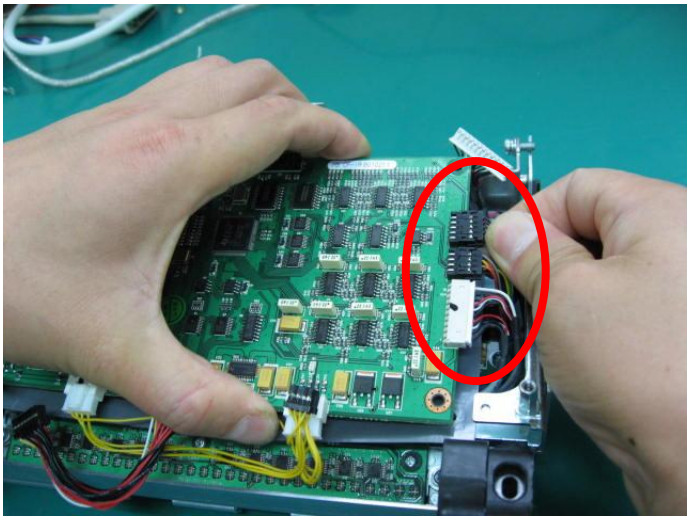

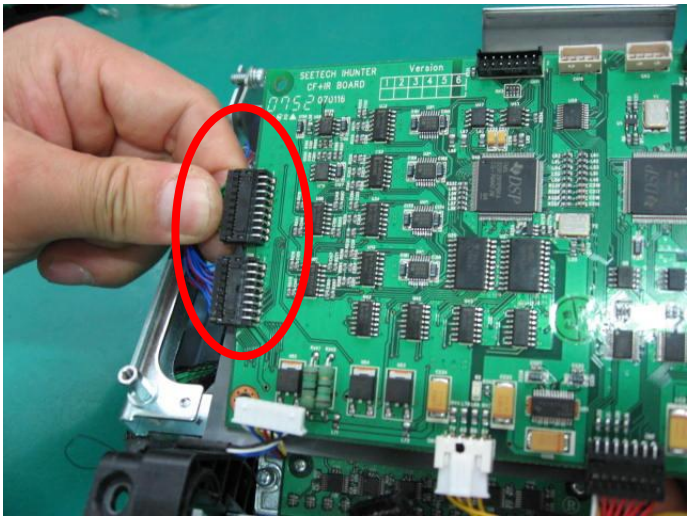

60) Separated CF-IR main board.

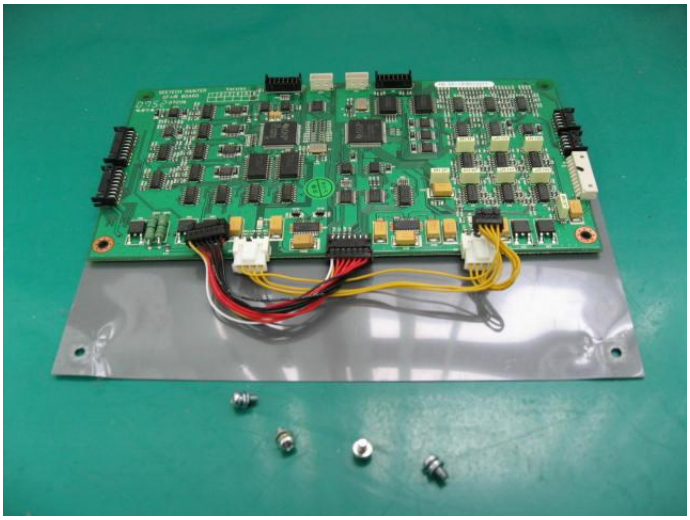

61) Remove 2 screws for separating CF Rear Sensor Board.

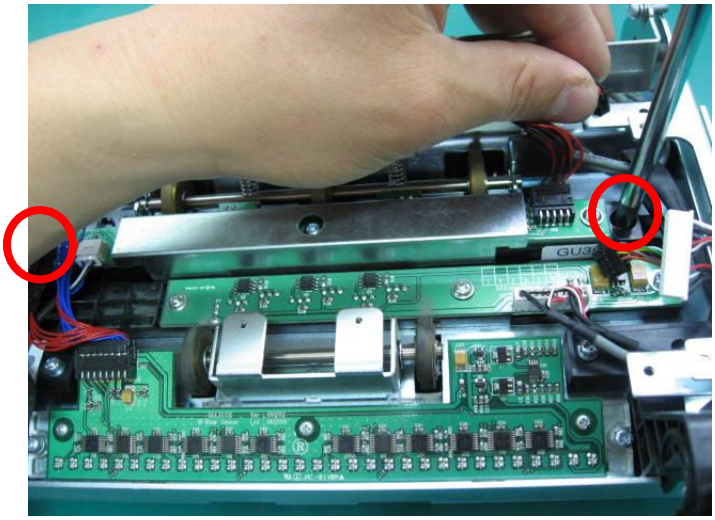

62) Remove 2 screws from Detector CF Cover.

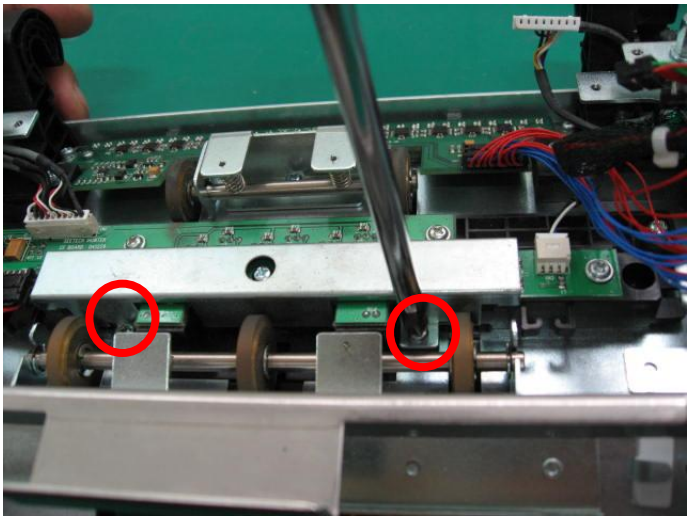

63) Separate CF Rear Sensor Board.

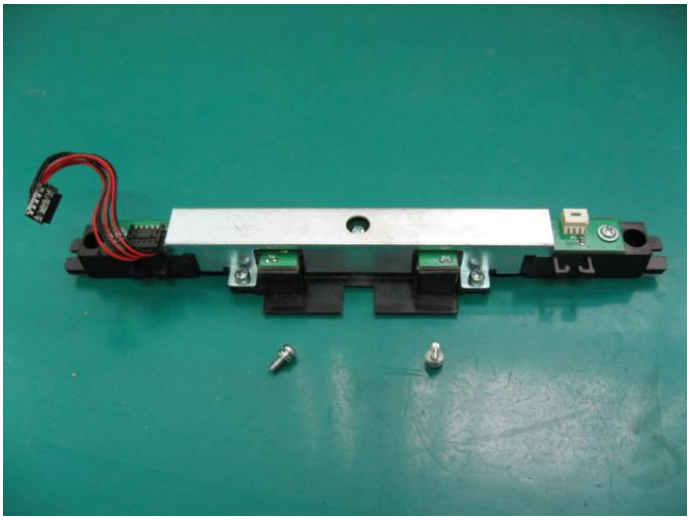

64) Remove two screws for separating MR Sensor Board.

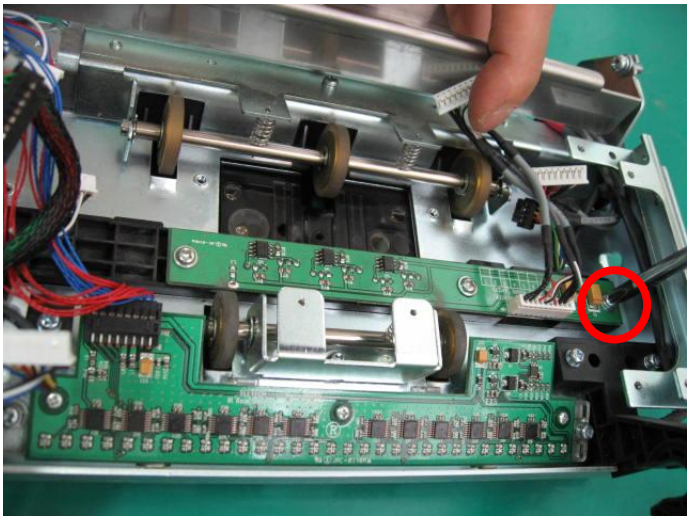

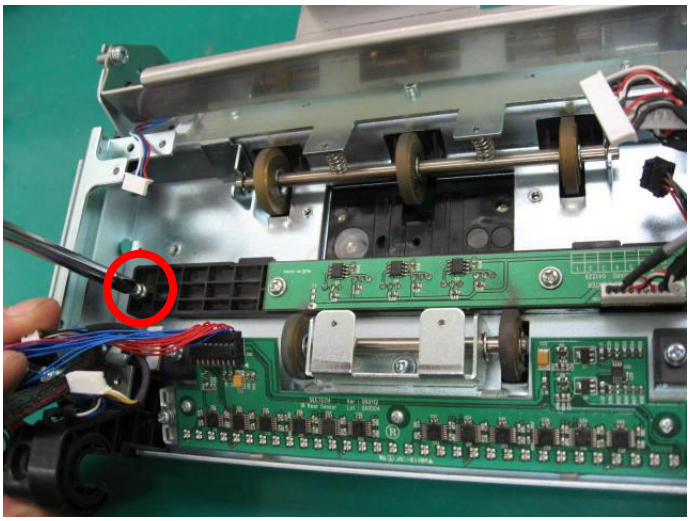

65) Separated MR Sensor Board.

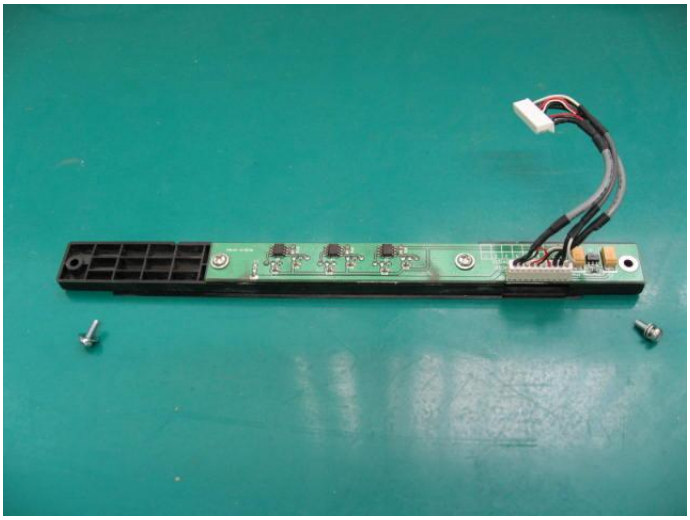

66) Prepare MR Sensor board for Side MG.

67) Put MR Sensor board for Side MG to Detector Module.

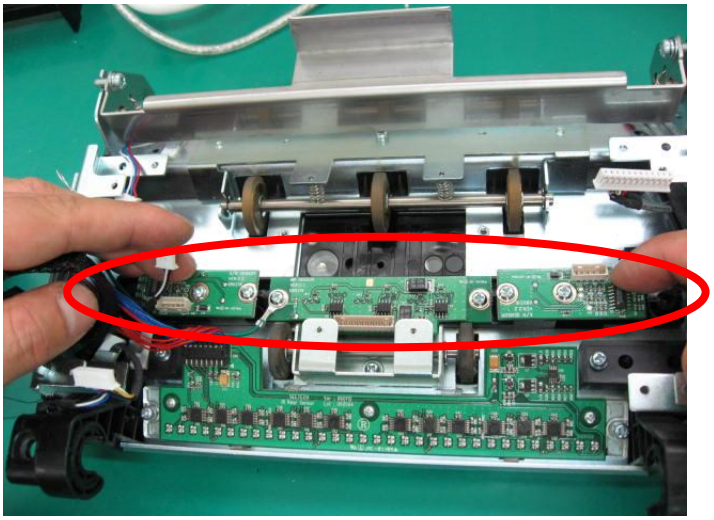

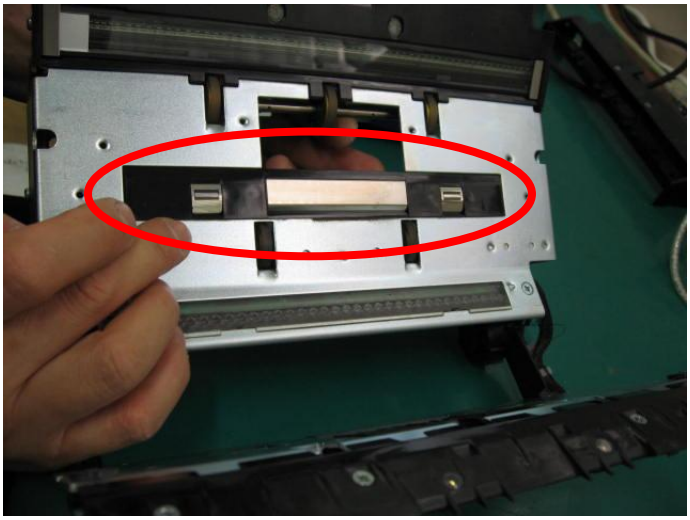

68) Tighten screw C to fix MR Sensor board for Side MG.

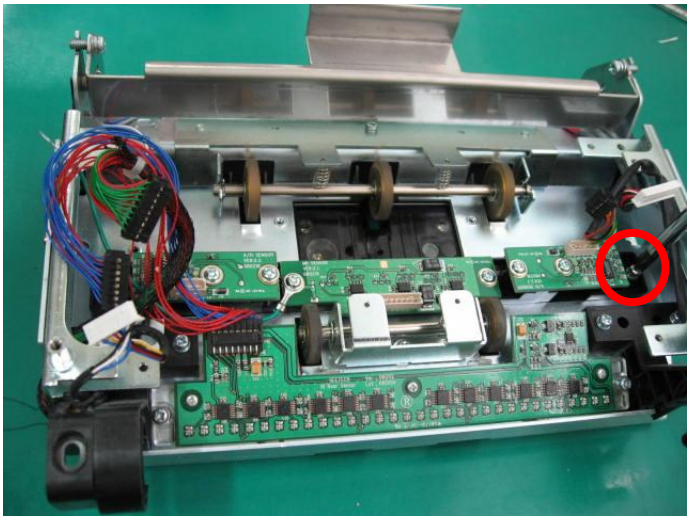

69) MR Sensor board for Side MG has Ground Cable. Put screw Ground Cable and tighten as picture.

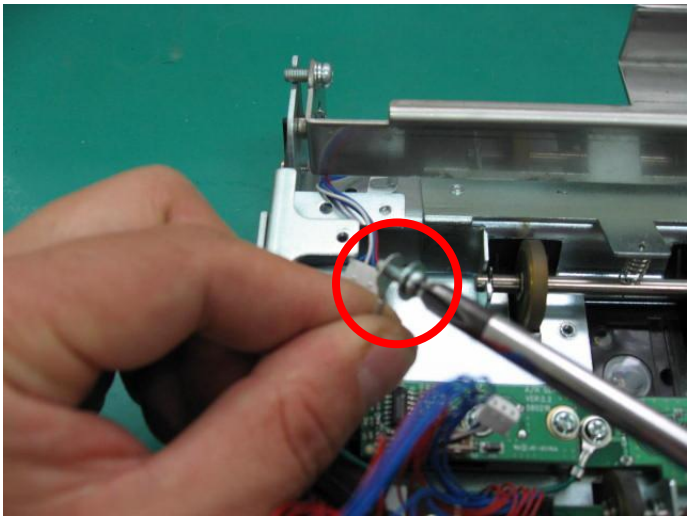

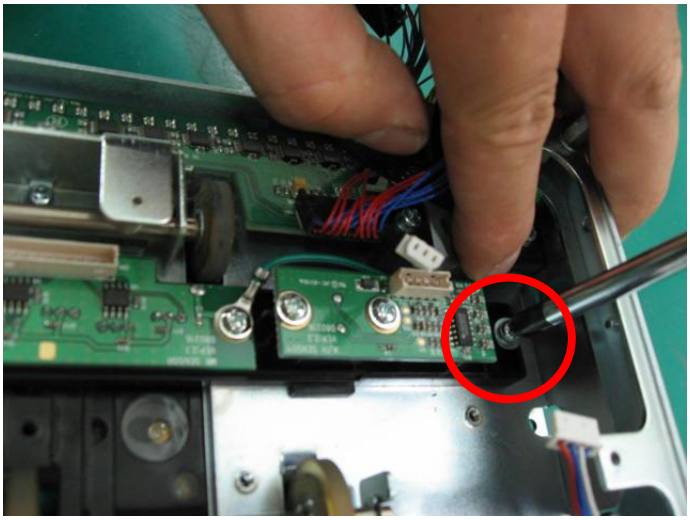

70) Put CF Rear Sensor Board to Detector Module.

71) Fix it by tightening 4 screws.

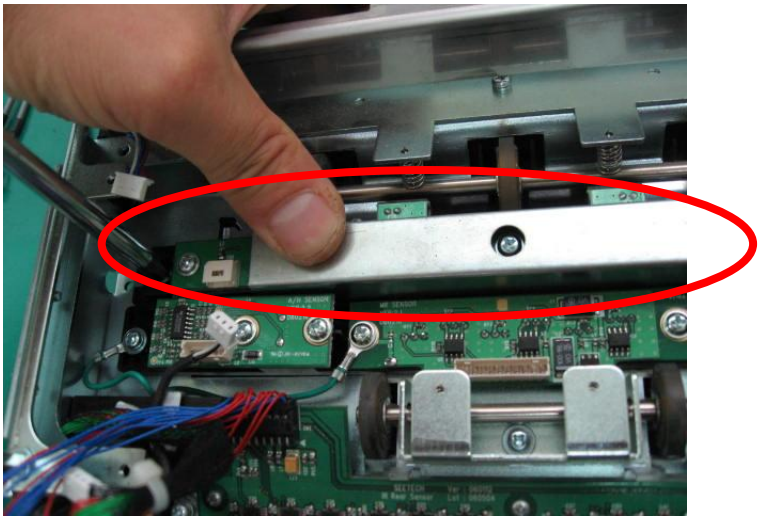

72) Connect CF counter LED & Sensor harness to CF Rear Sensor Board.

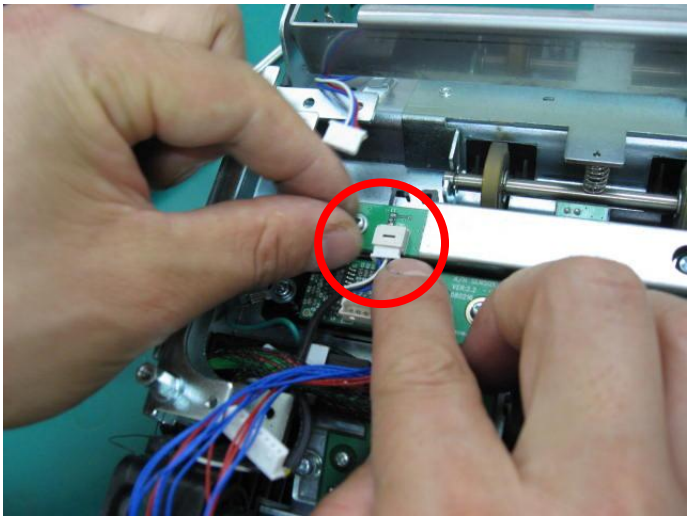

73) Connect MR-AH sensor harness to three connectors.

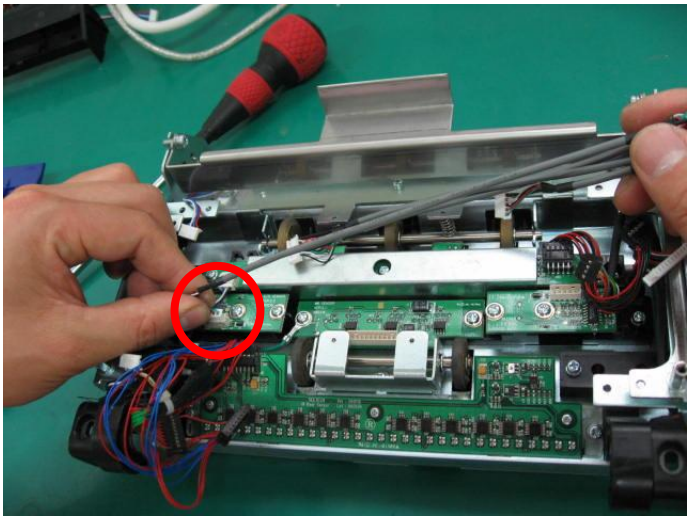

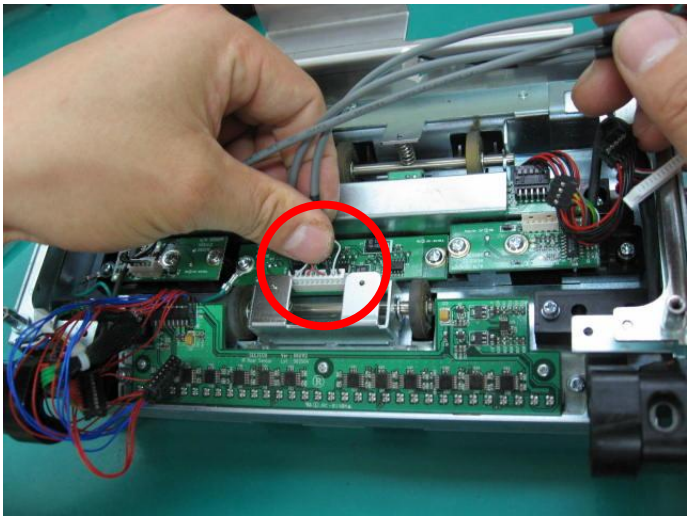

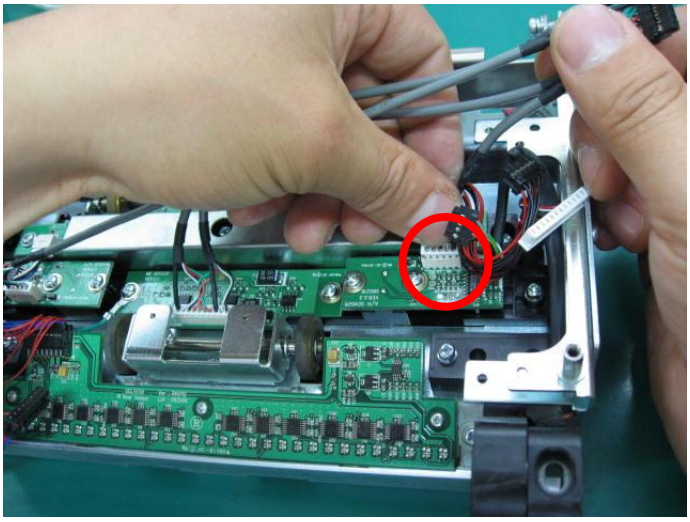

74) Arrange harnesses as picture.

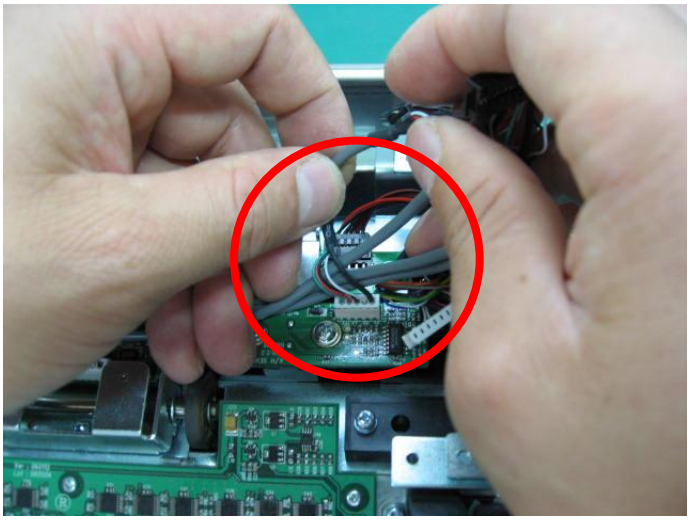

75) Put MR-AH sensor harness as picture.

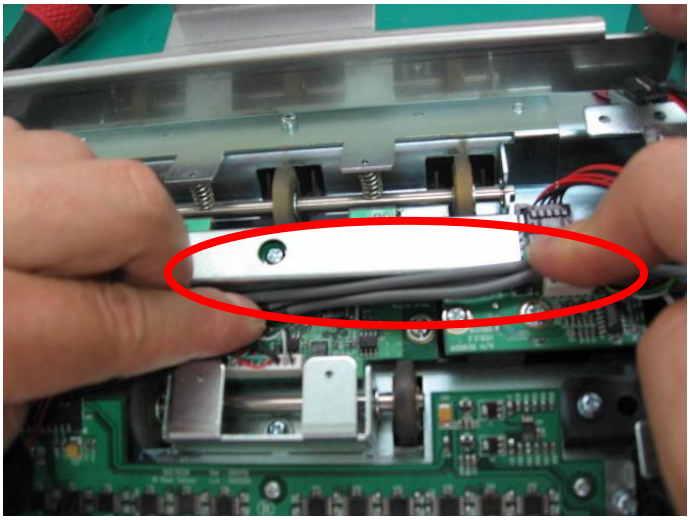

76) Prepare new CF-IR main board for Side MG.

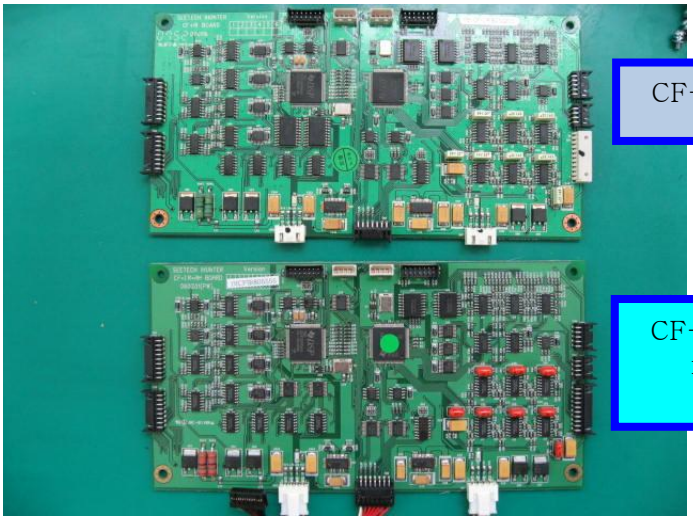

77) Connect CIS& CF/ IR power harness and CF/ IR signal harness to new CF-IR main board.

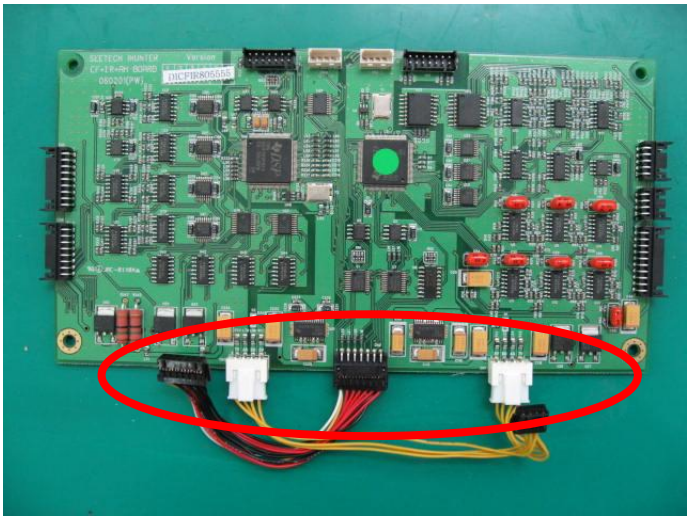

78) Put shield to rear side of CF-IR main board for Side MG.

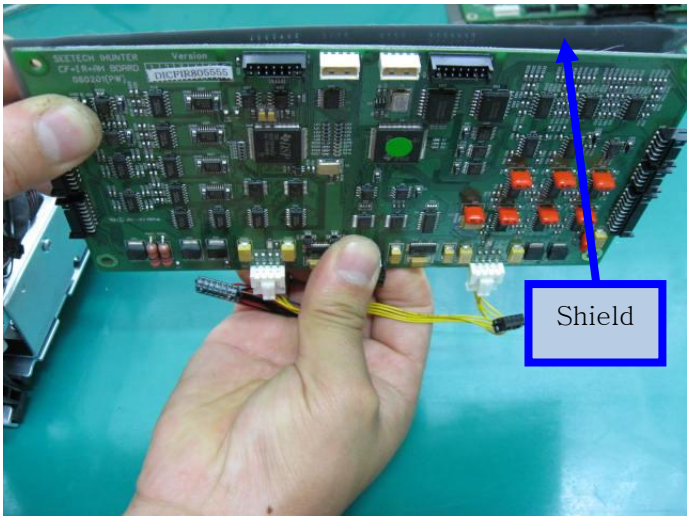

Both sides of shield are different. Plastic side must touch CF-IR Main board!!

79) Connect all harnesses which are connected with CF-IR Main Board.

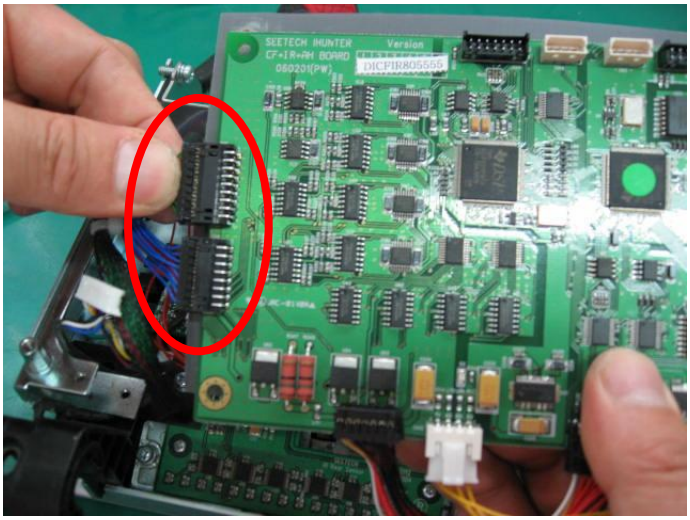

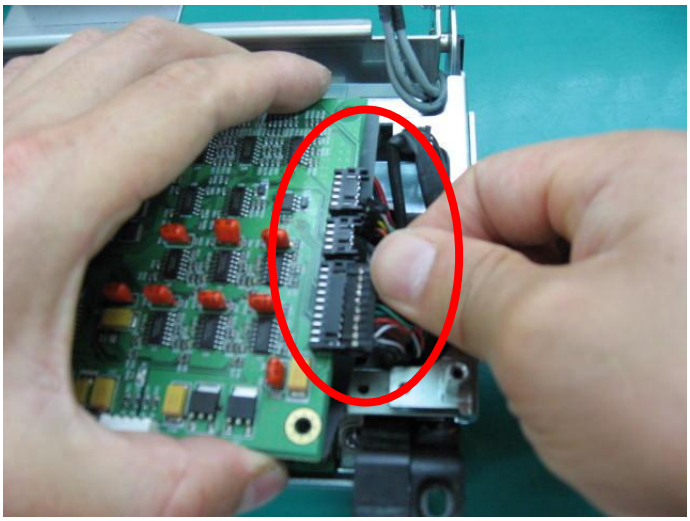

80) Put new CF-IR main board to Detector Module as picture.

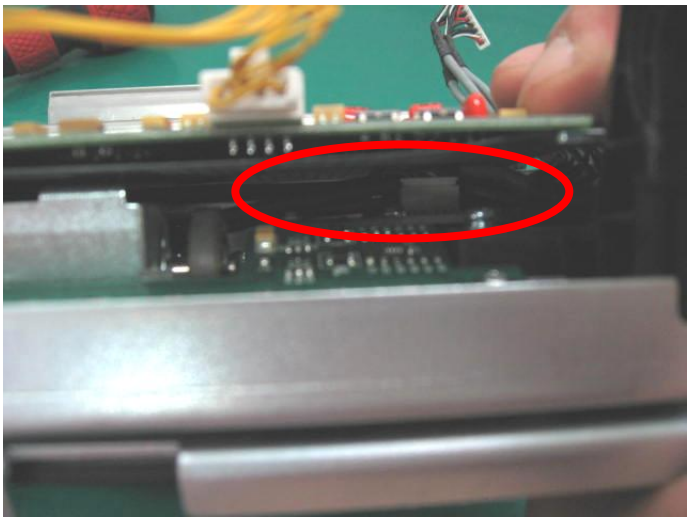

Pay attention that the harness isn't pressed down.

81) Fix CF-IR main board by tightening 4 screws.

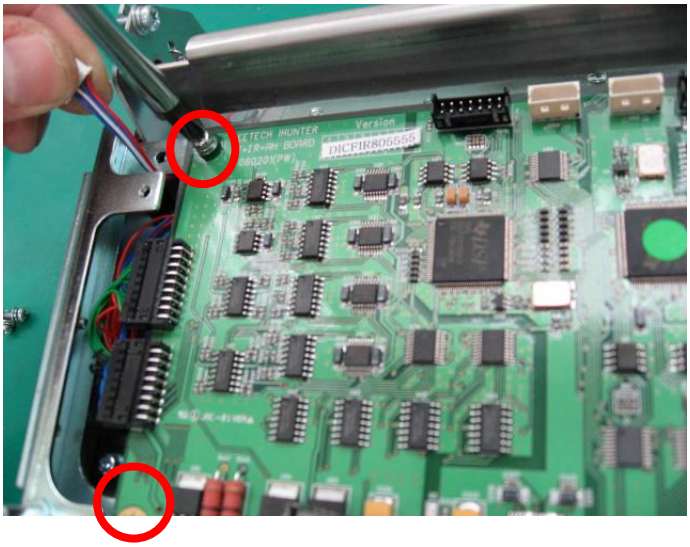

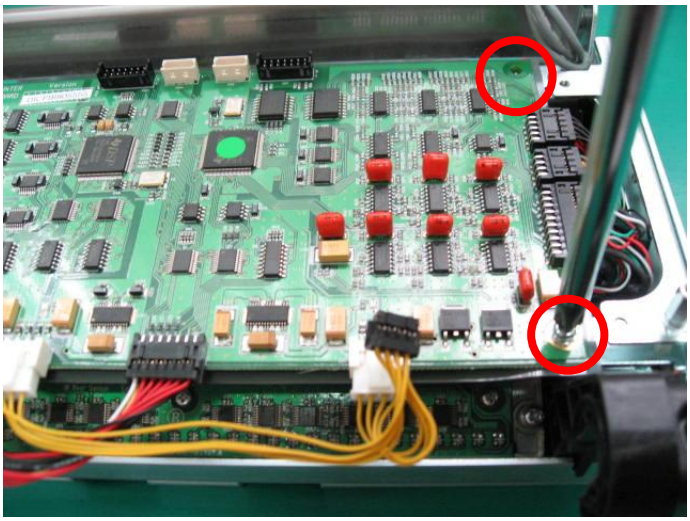

82) Put shield to CIS 2 main board.

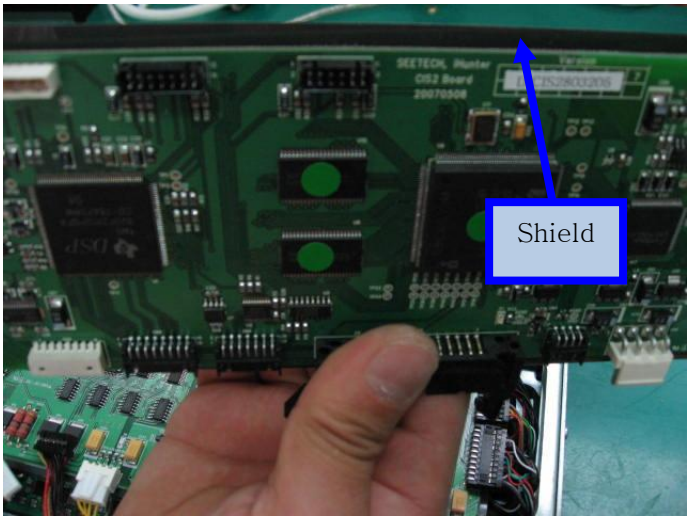

Both sides of shield are different. Plastic side must touch CIS 2 Main board!!

83) Connect CF Count LED & Sensor harness to CIS 2 main board.

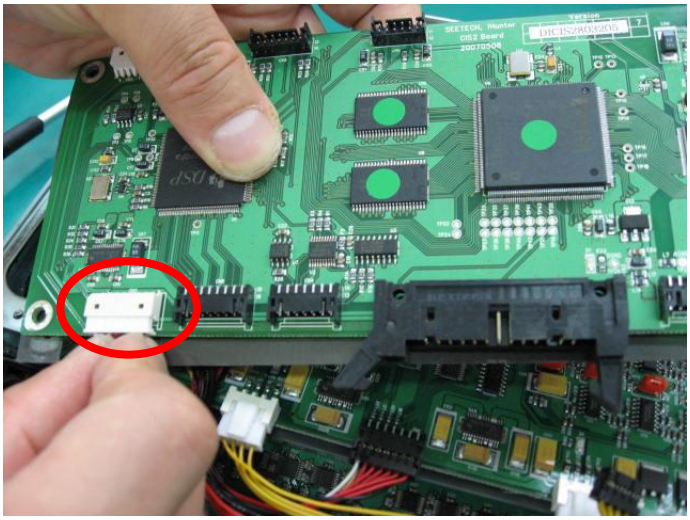

84) Fix CIS 2 main board to Detector Module.

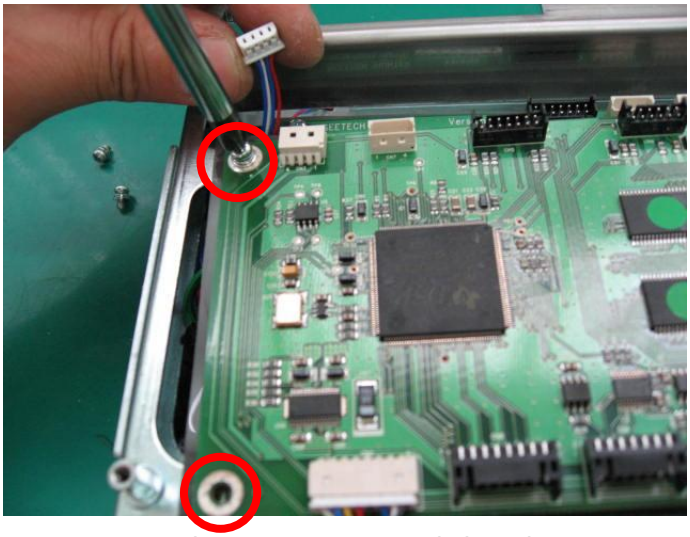

85) Connect Power harness to CIS 2 main board.

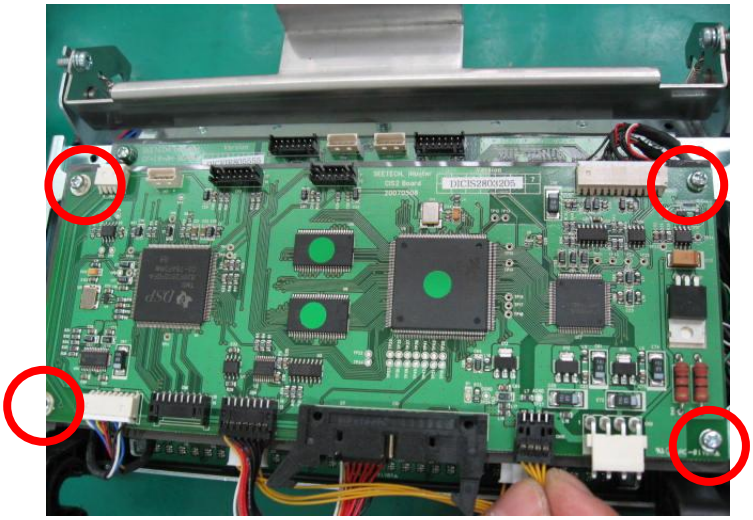

86) For replacing CIS Housing, separate CIS Image Harness.

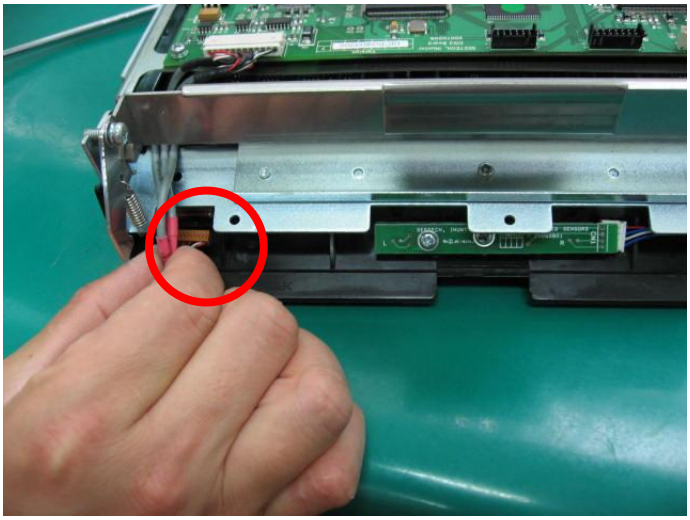

87) Remove 2 screws as picture.

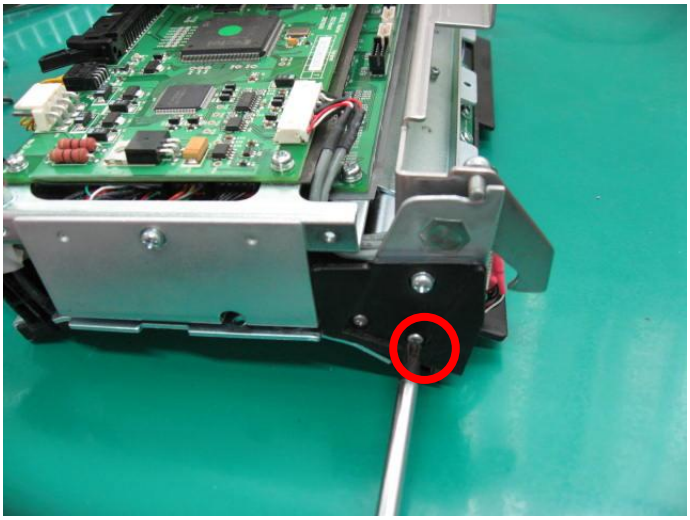

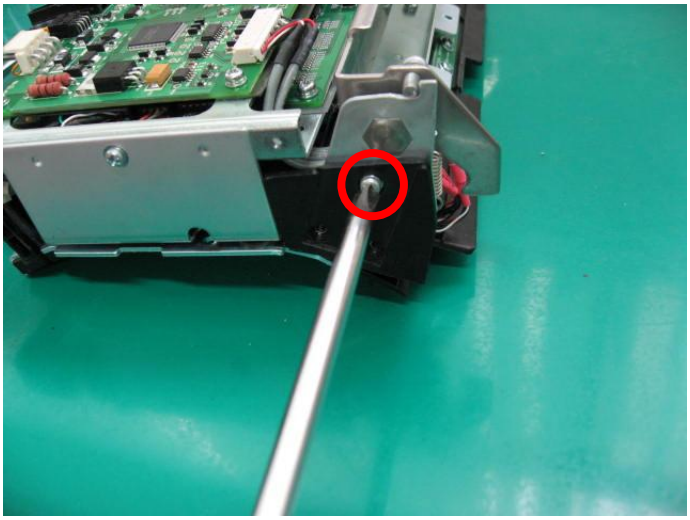

88) Remove 2 screws which are placed to opposite side.

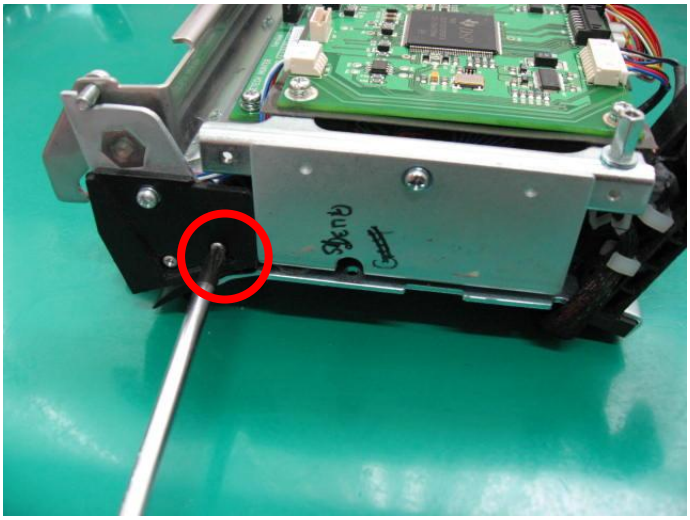

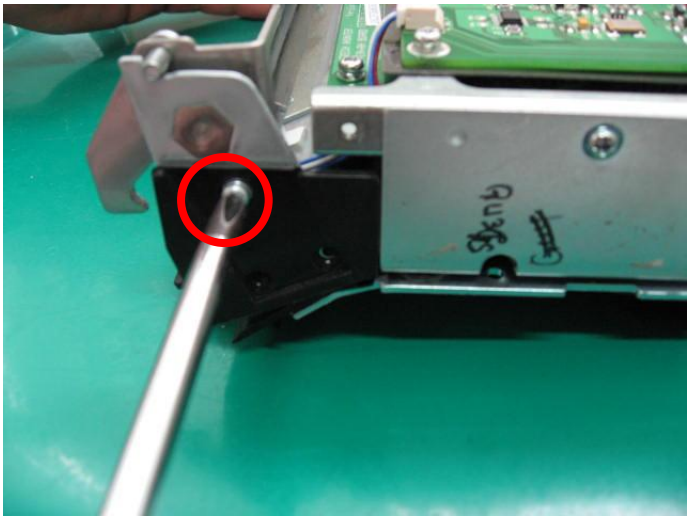

89) Push CIS sensor by pushing CIS sensor as picture.

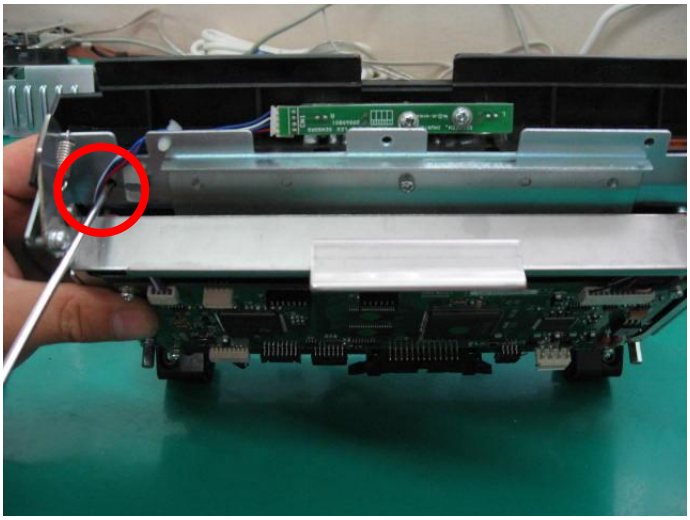

90) CIS sensor and CIS Plain Plate are separated.

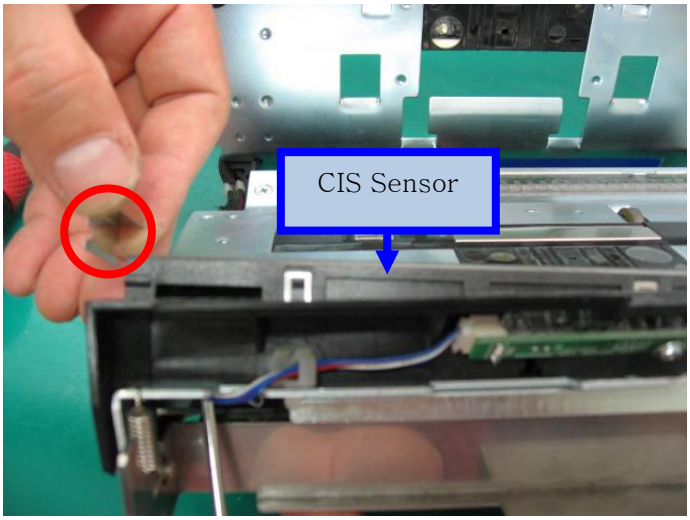

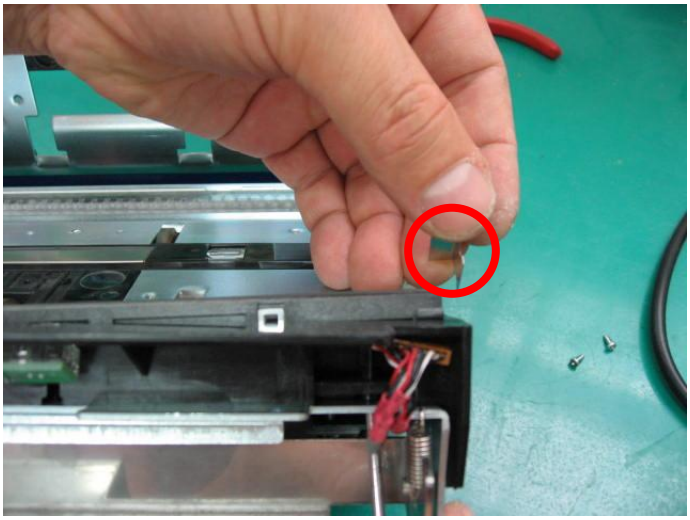

91) Remove CIS sensor from CIS Housing.

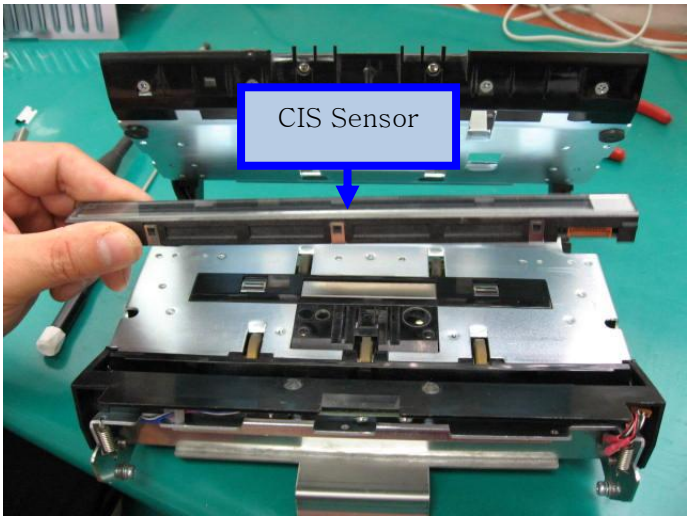

92) For separating CIS Housing, remove 2 screws as below.

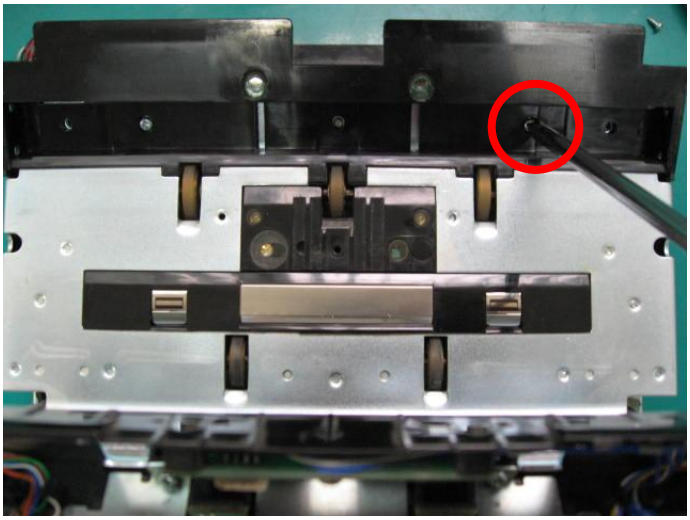

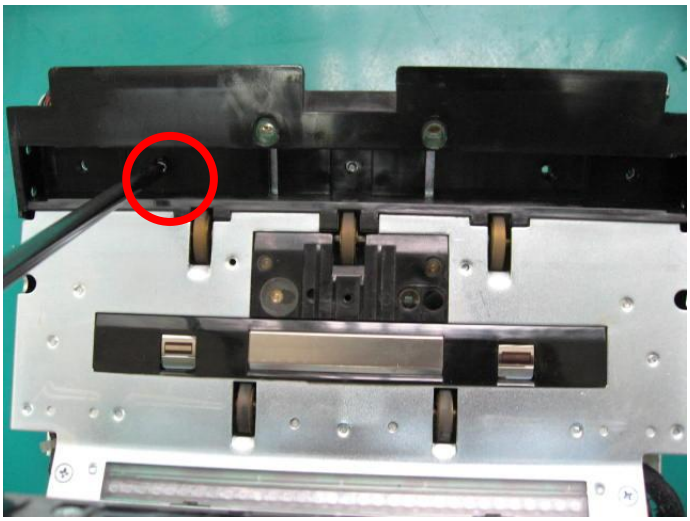

93) Separate CIS counter LED board harness.

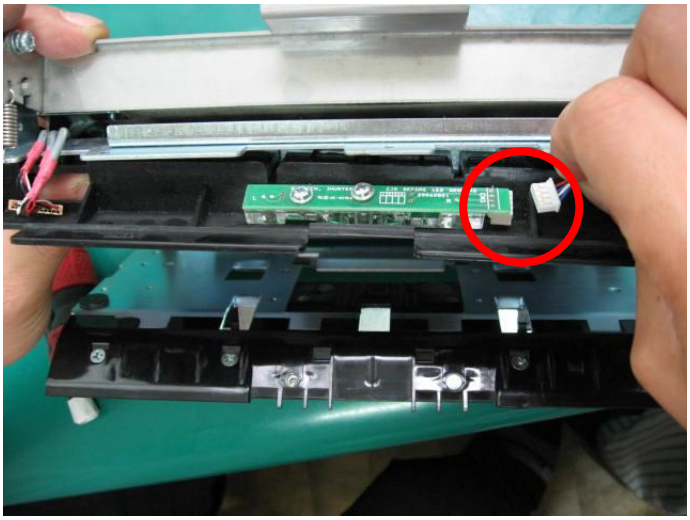

94) CIS Housing is separated.

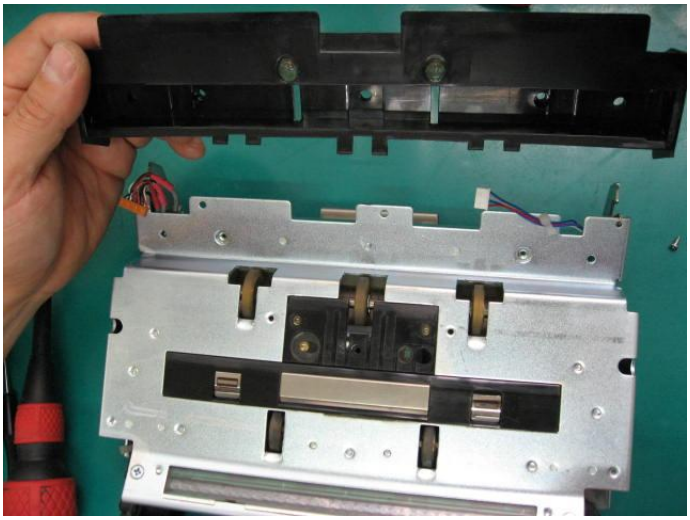

When put CIS Housing, CIS Housing must hug Detector Front Plate to the limit.

95) Prepare new CIS Housing for Side MG and put it to Detector Module.

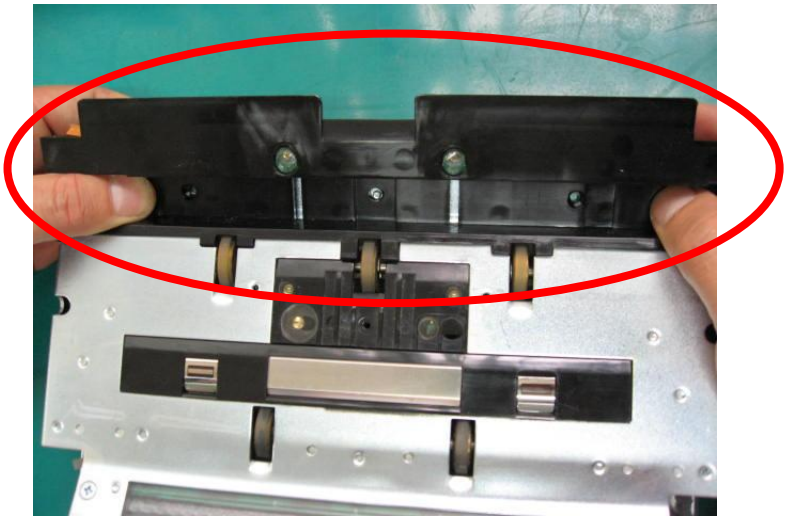

96) Fix it by tightening 2 screws.

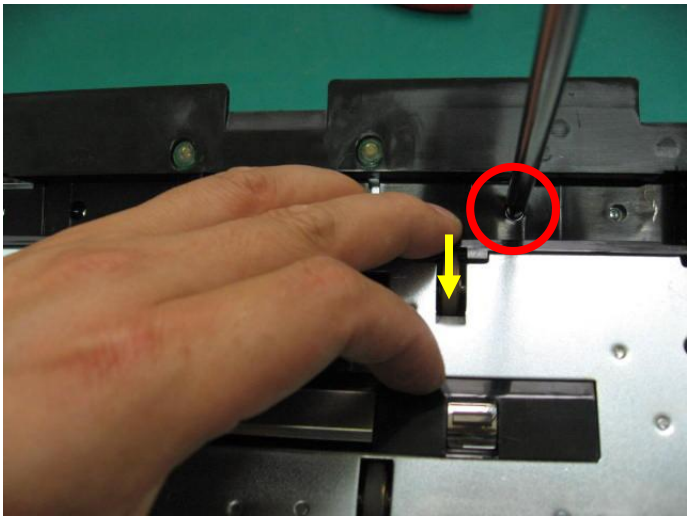

Tighten screws by pressing CIS Housing to Detector module like yellow arrow.

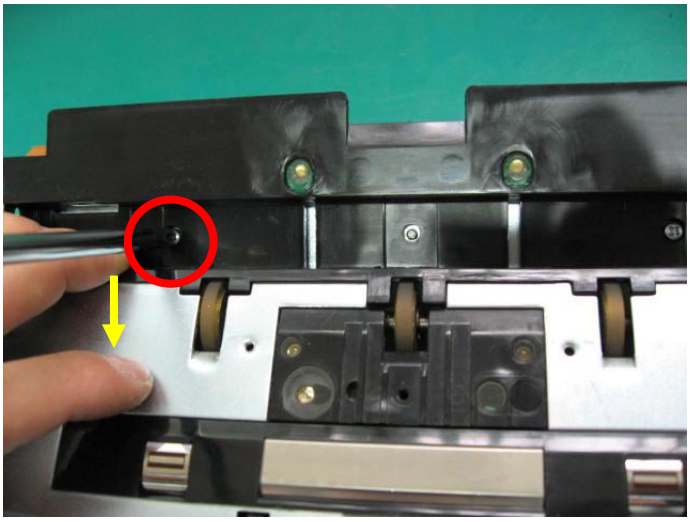

97) Fix side of CIS Housing by tightening screw A.

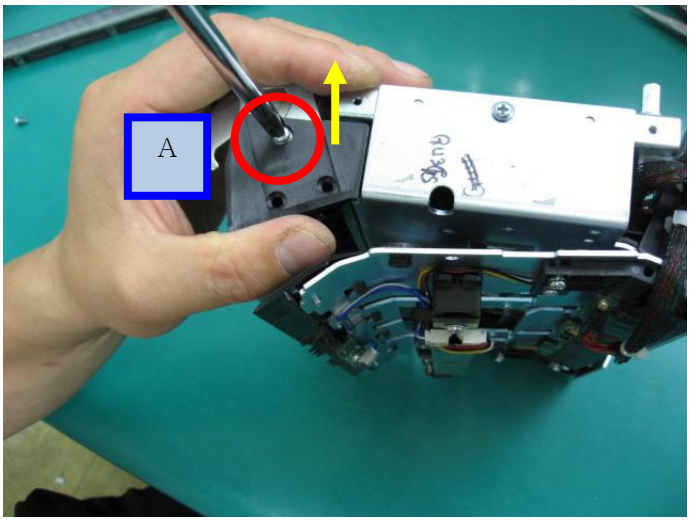

Tighten screw A by pressing CIS Housing to Detector module like yellow arrow.

98) Fix opposite side too.

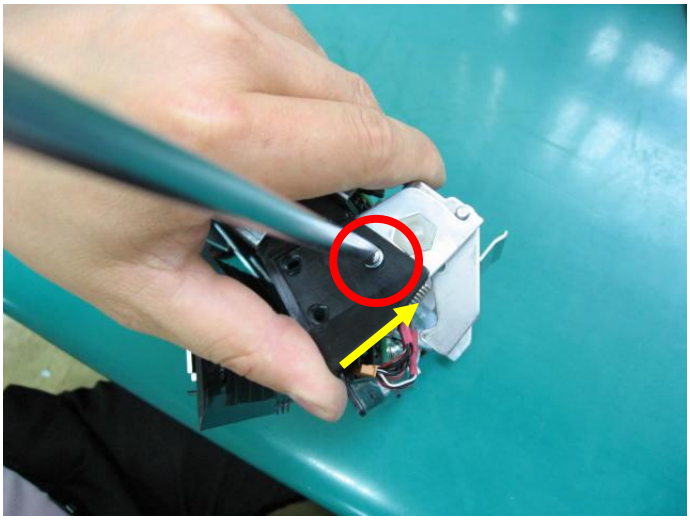

Tighten screw by pressing CIS Housing to Detector module like yellow arrow.

99) Connect CIS counter LED board harness.

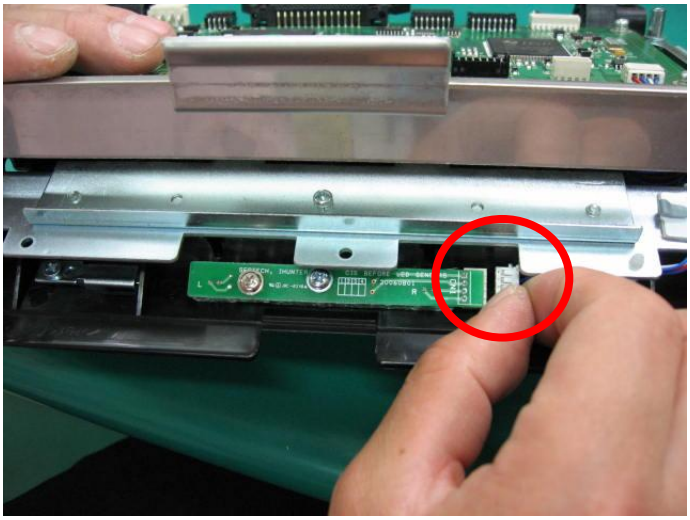

100) Assembled new CIS Housing.

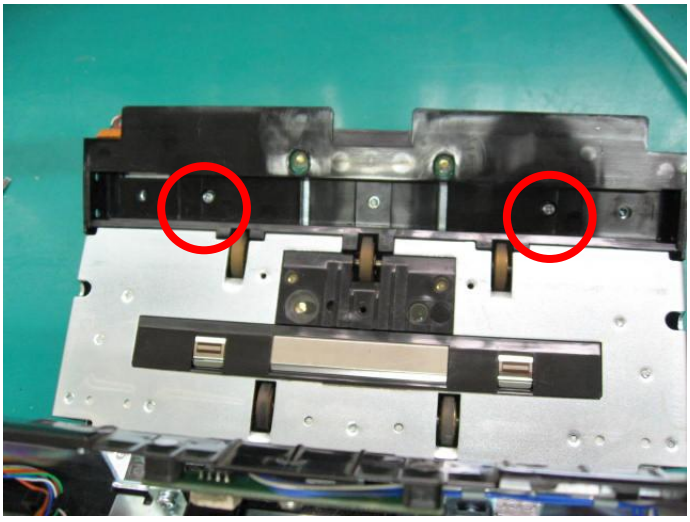

101) Put 2 units of CIS Plain Plate to both side of CIS sensor.

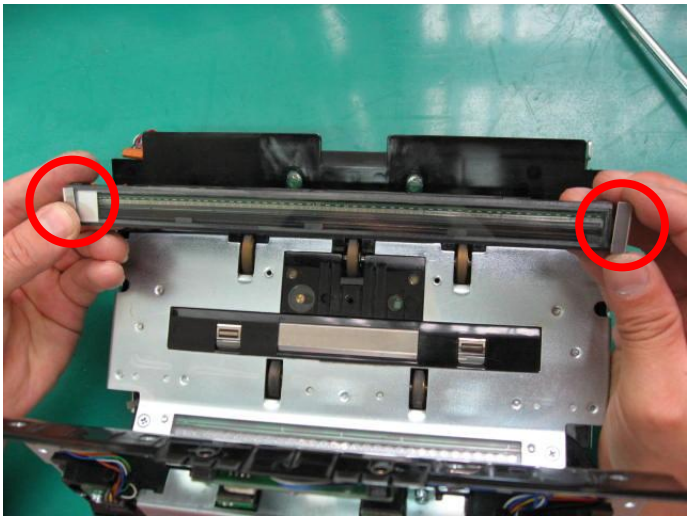

102) Put them to CIS Housing.

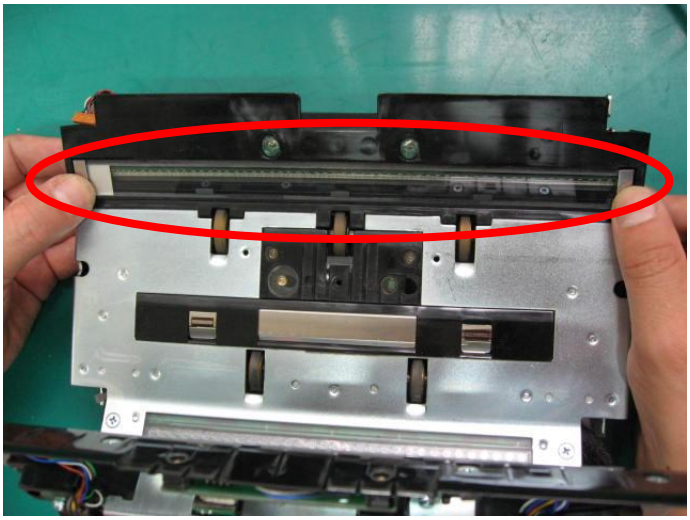

103) Fix CIS sensor and CIS Plain Plate by tightening screw 1 and 2.

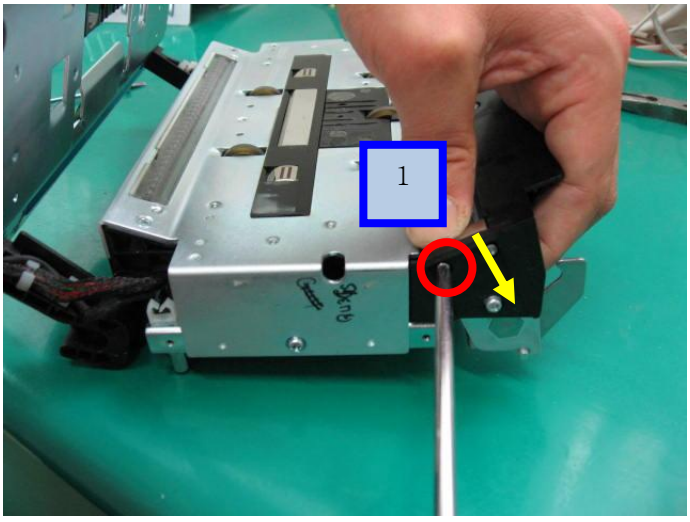

Tighten screw by pressing CIS Sensor to CIS Housing like yellow arrow.

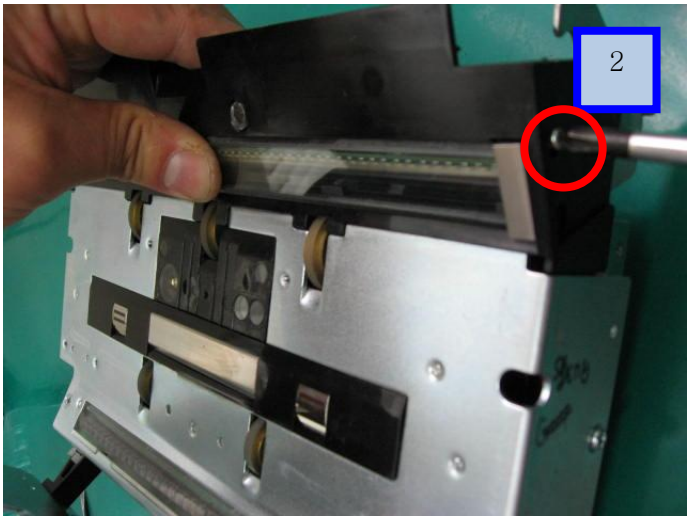

104) Go to opposite side and tighten screw 3 and 4.

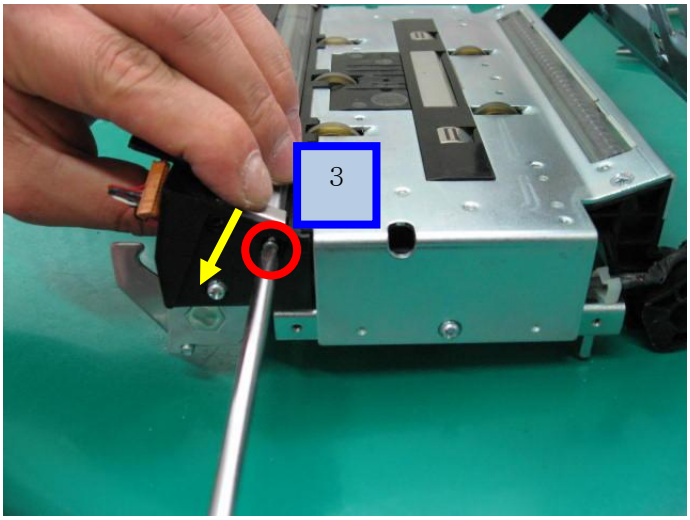

Tighten screw by pressing CIS Sensor to CIS Housing like yellow arrow.

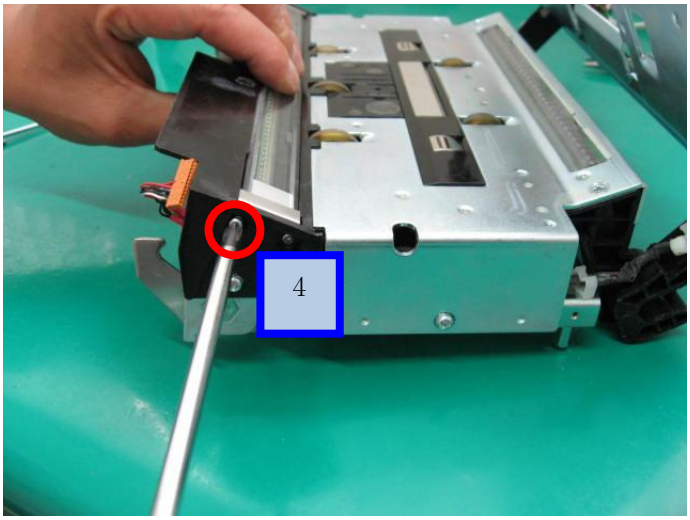

105) Connect CIS Image Sensor harness.

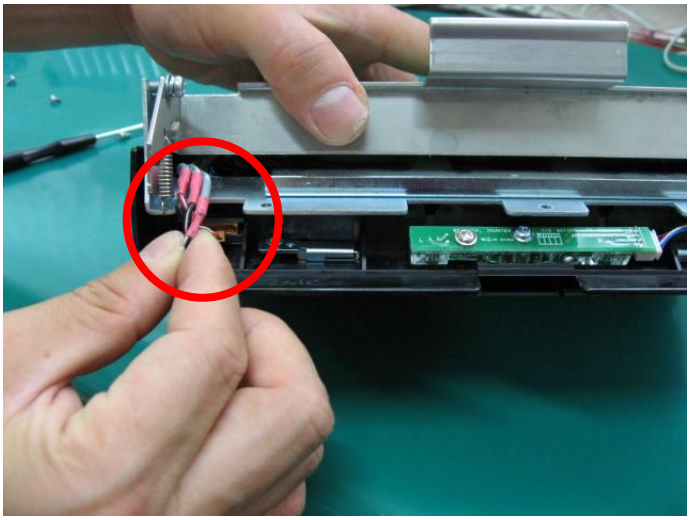

106) Put Detector Cover Plate to Detector Module and tighten 2 screws.

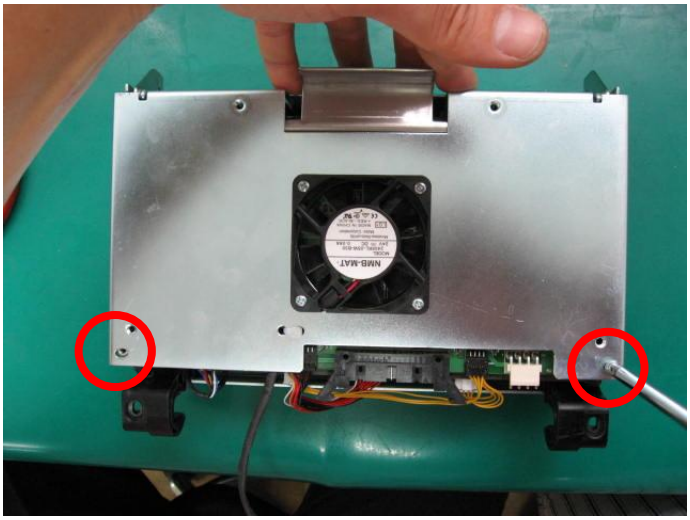

107) Fix Detector Cover Plate by tightening 2 screws as below.

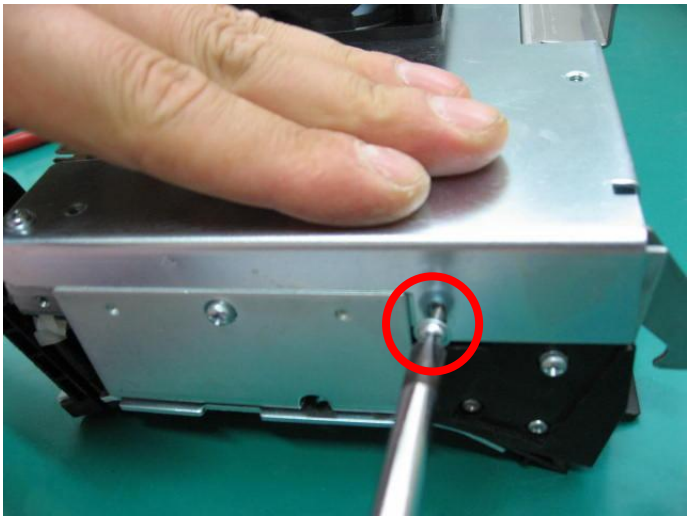

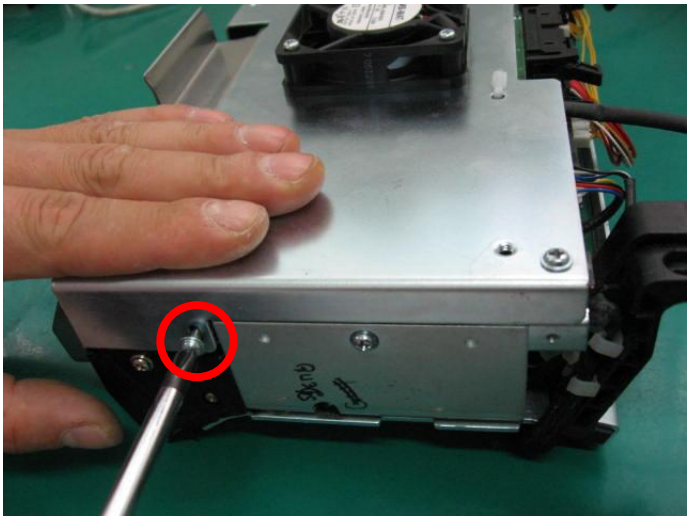

108) Assembled Detector Module.

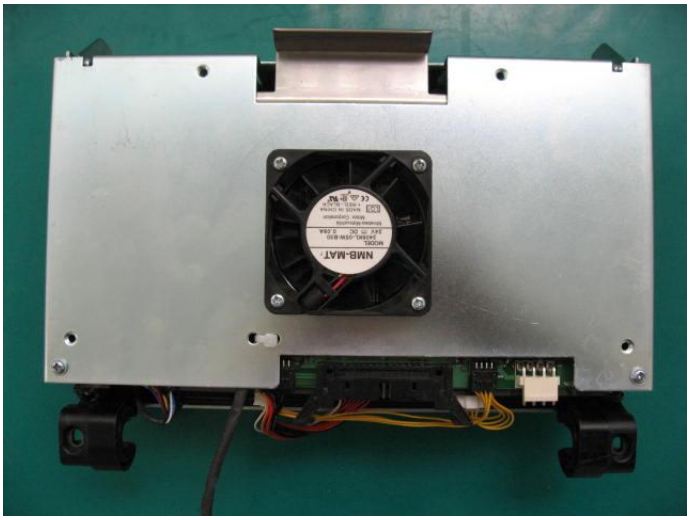

5. Assemble Detector Module

1) Put Right Side Cover to machine.

2) For fixing Right Side Cover, tighten screw A.

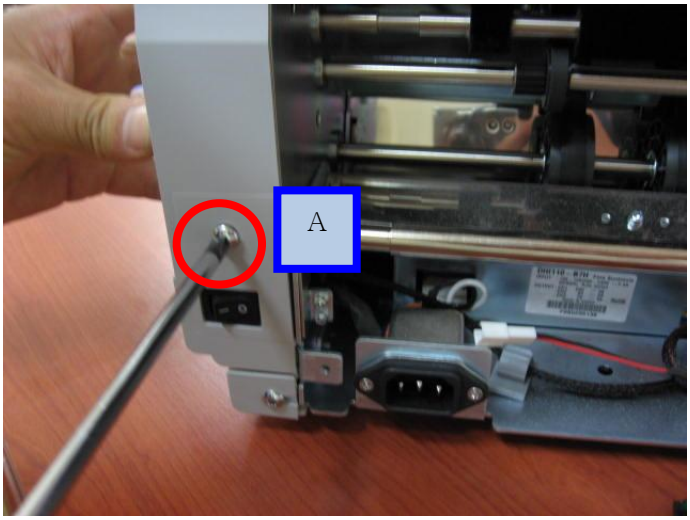

3) Tighten screw B.

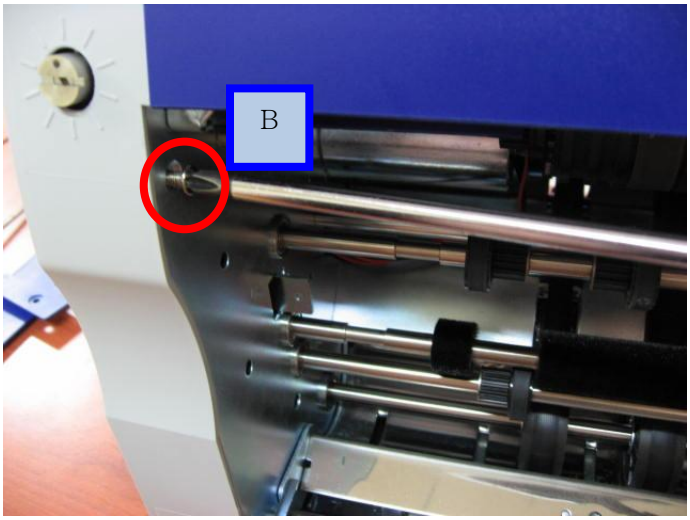

4) Push Release buttons and lift up Front side of machine.

5) After lift up Front side.

6) Tighten screw C.

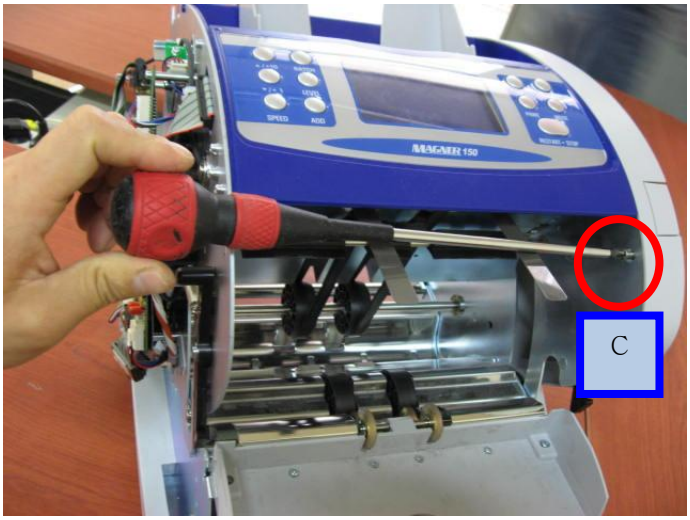

7) Put Left Side Cove to machine.

8) For fixing Right Side Cover, tighten screw D.

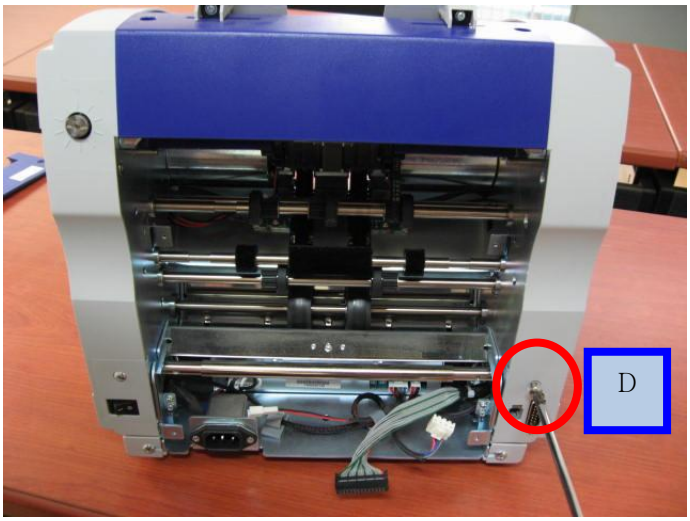

9) Tighten screw E.

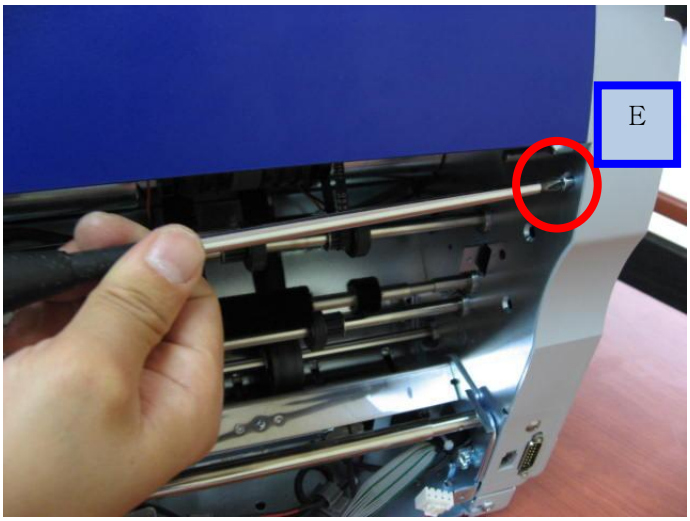

10) Tighten screw F.

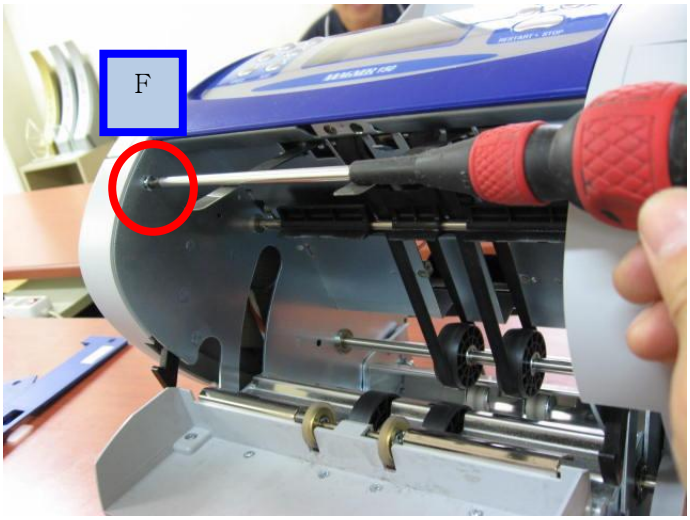

11) Put Detector Module to rear side of machine.

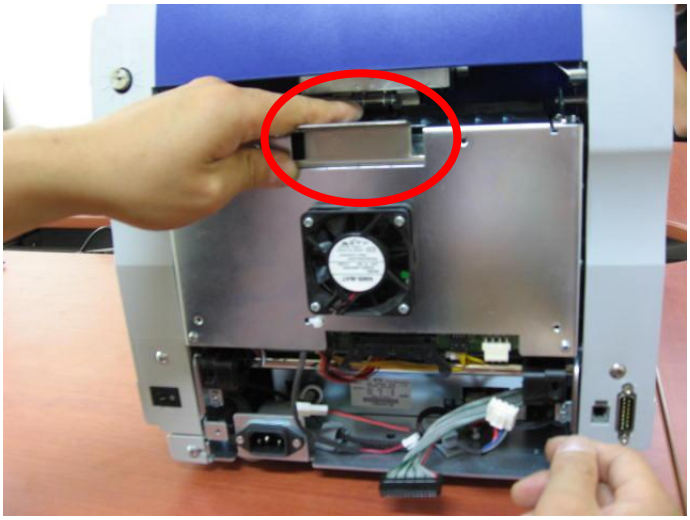

12) When put Detector Module, Detector Lower Left and Right Hinge must hang on shaft.

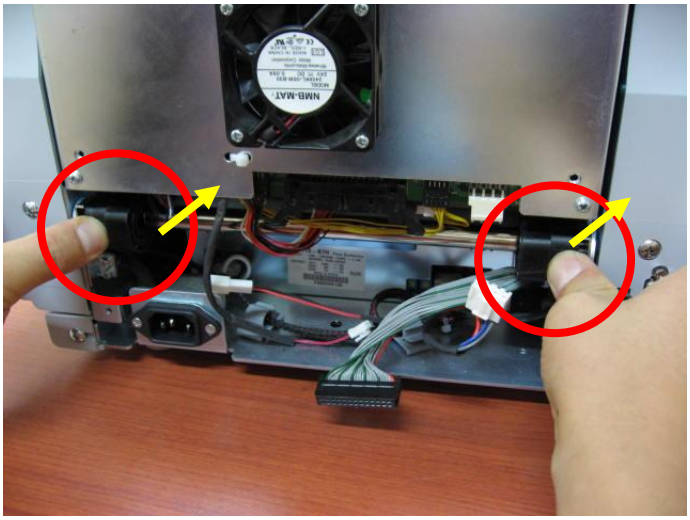

13) Open Rear Cover of Detector Module and tighten screw G and H.

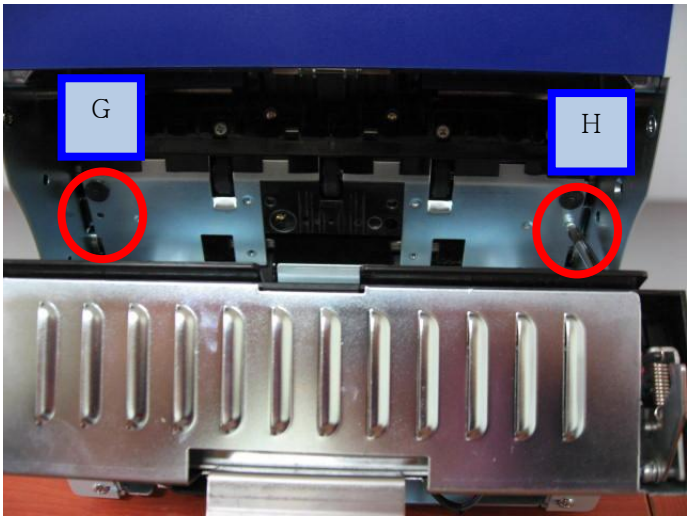

14) Close Rear Cover and tighten screw I.

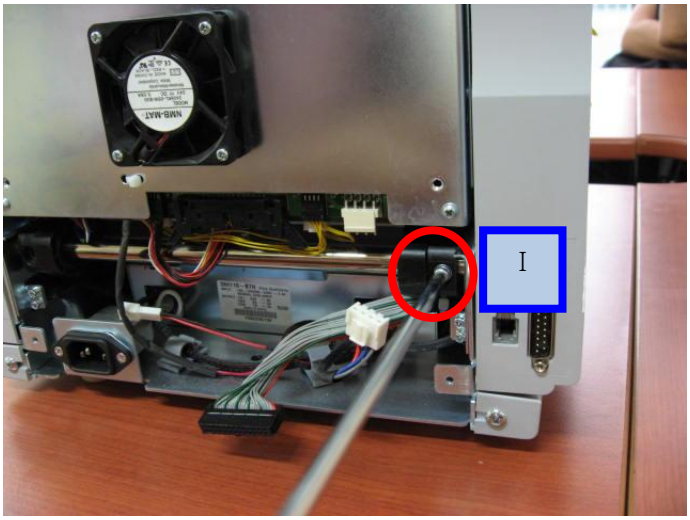

15) Tighten screw J.

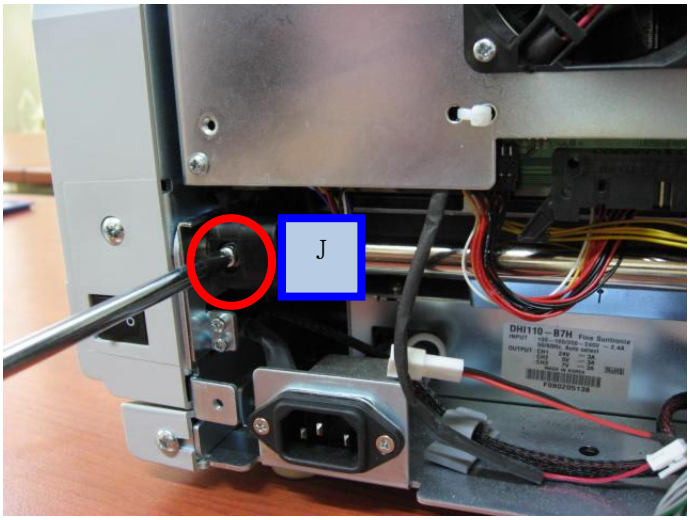

16) Connect CF&CIS Operation harness.

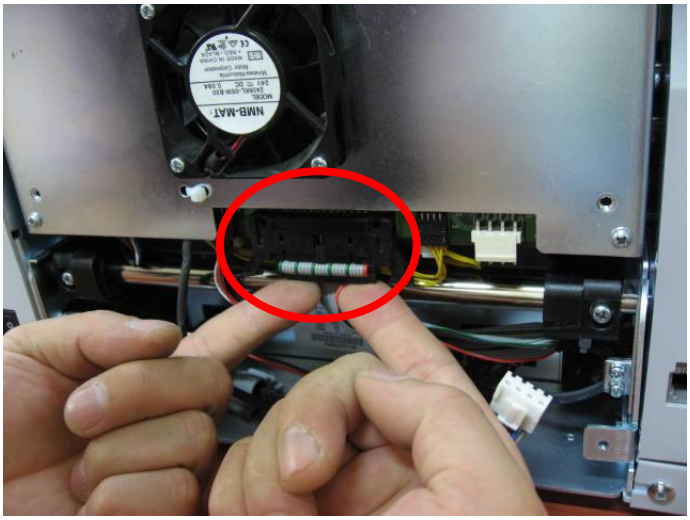

17) Connect Power harness.

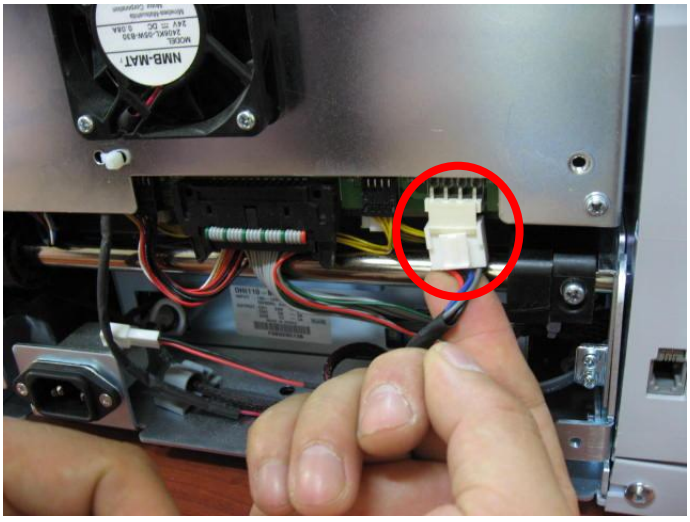

18) Connect SMPS output-2 harness to Fan harness.

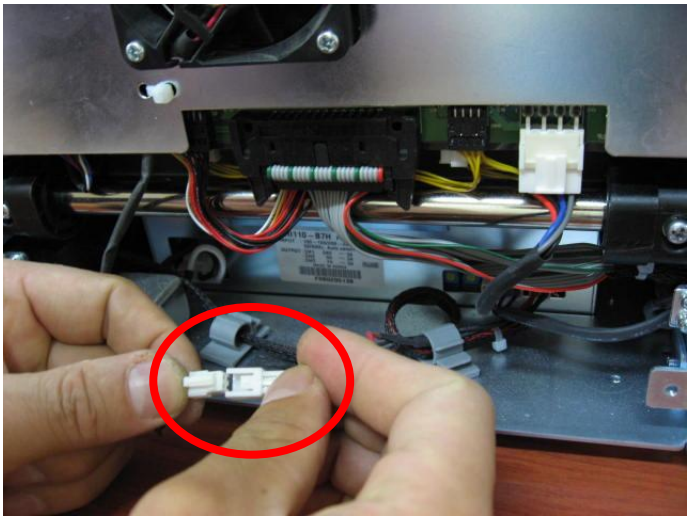

19) Put Lower Rear Cover.

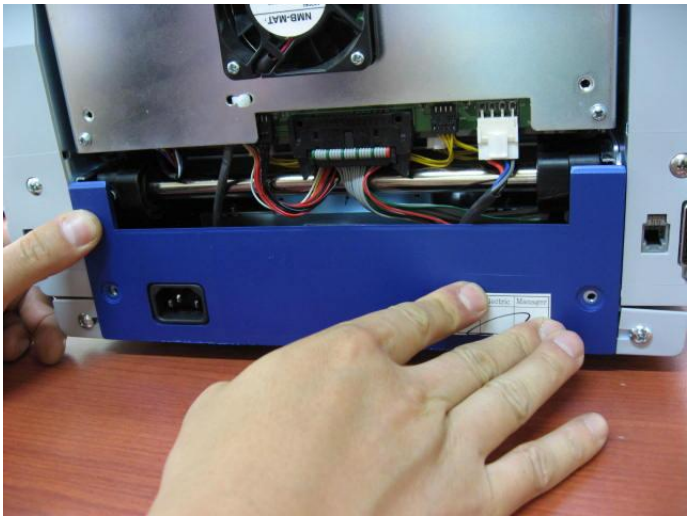

20) Fix it by tightening screw K and L.

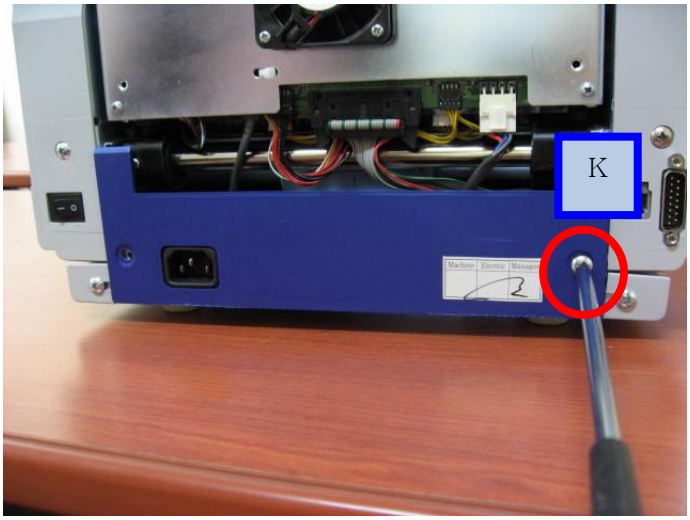

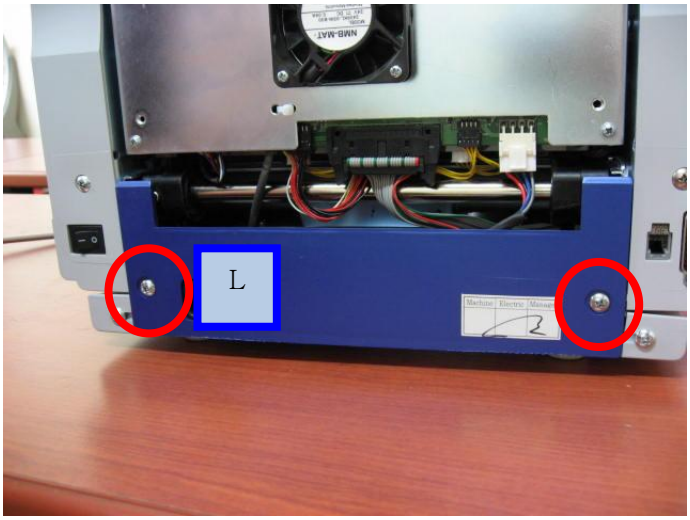

21) Put Rear Middle Cover as picture.

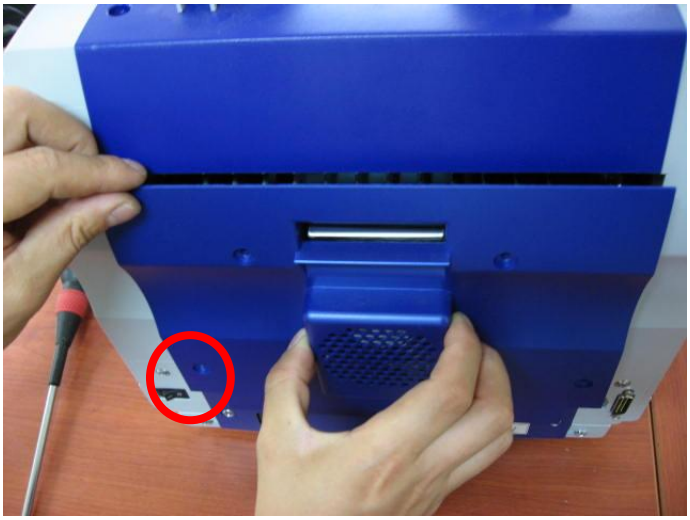

22) Fix it by tightening 4 screws.

23) Assembled view.

24) Open Rear Cover and check Rear Cover open and close smoothly.

7-27. HOW TO REPLACE CF MAIN BOARD AND IR MAIN BOARD TO CF-IR MAIN BOARD

CF main board

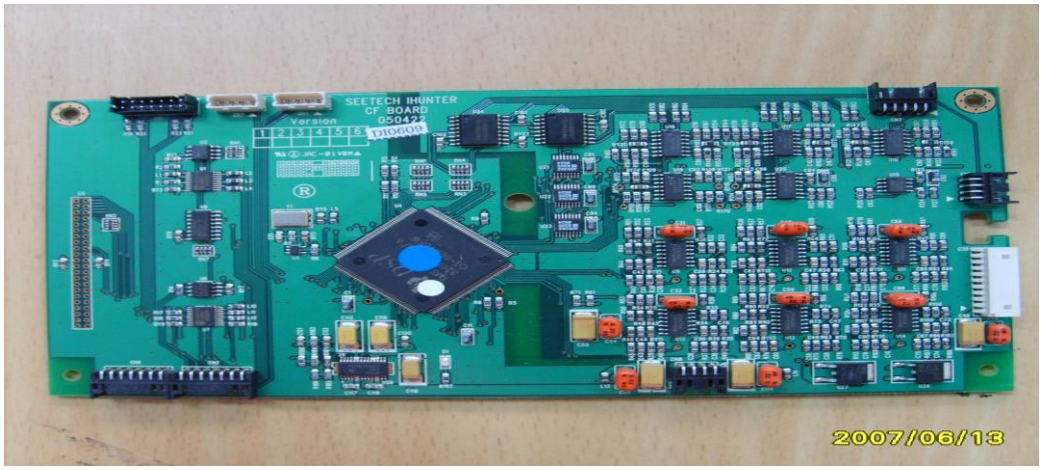

IR main board

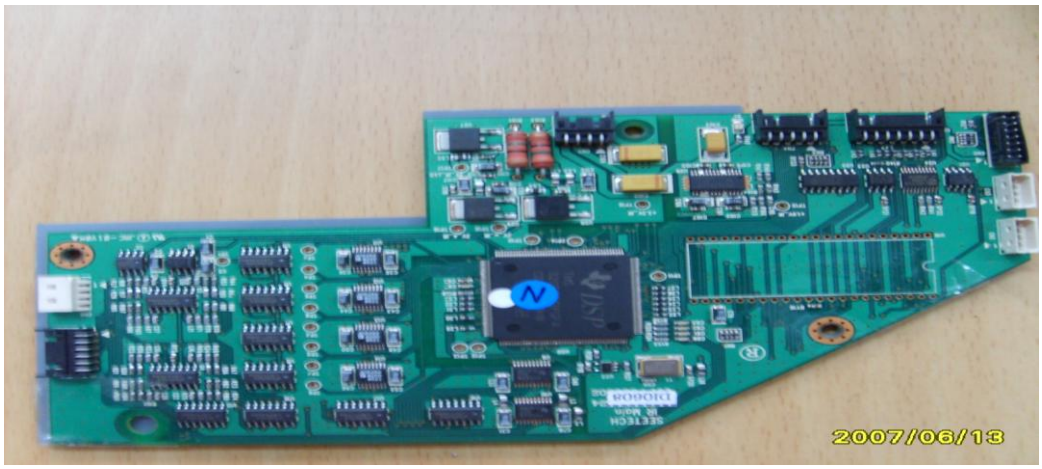

CF/IR main board

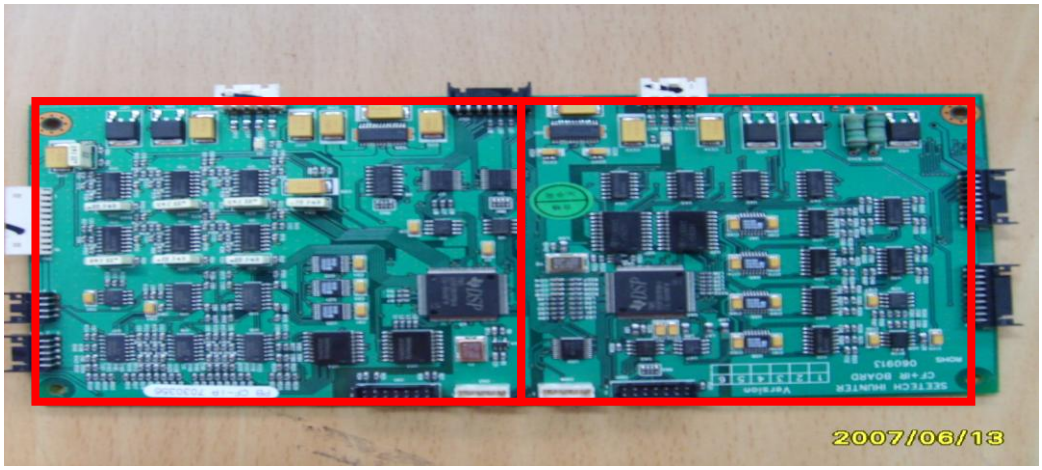

CF PART IR PART

1. Remove three screws from IR main board.

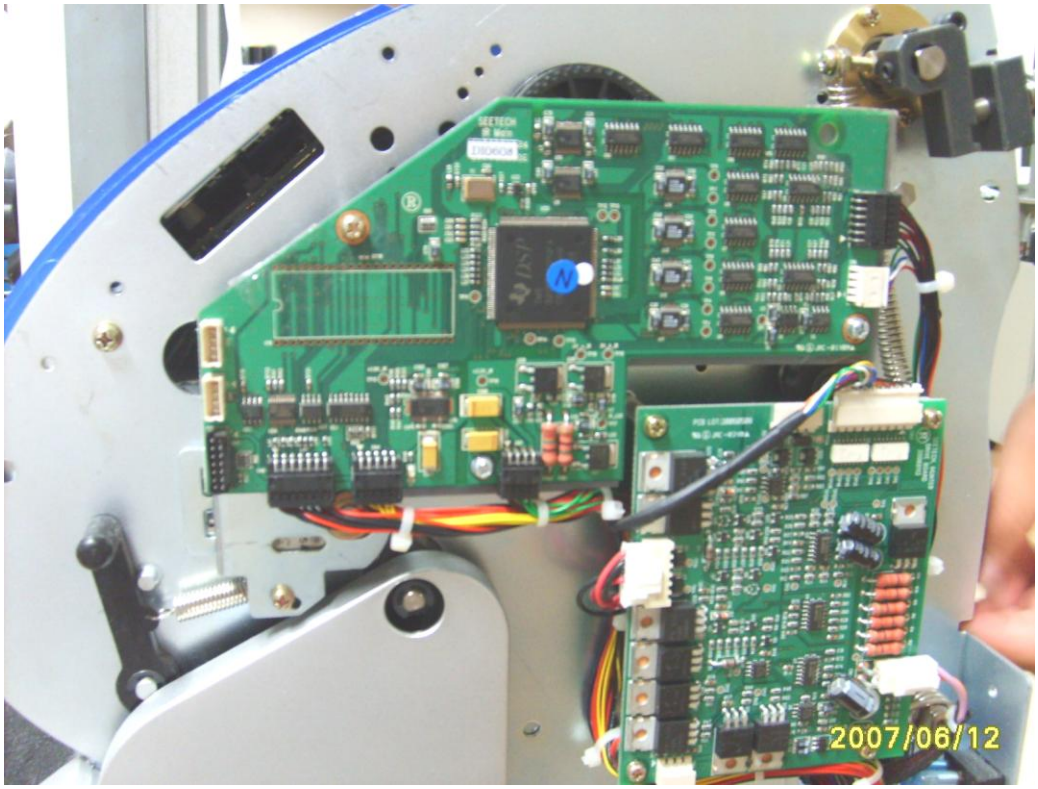

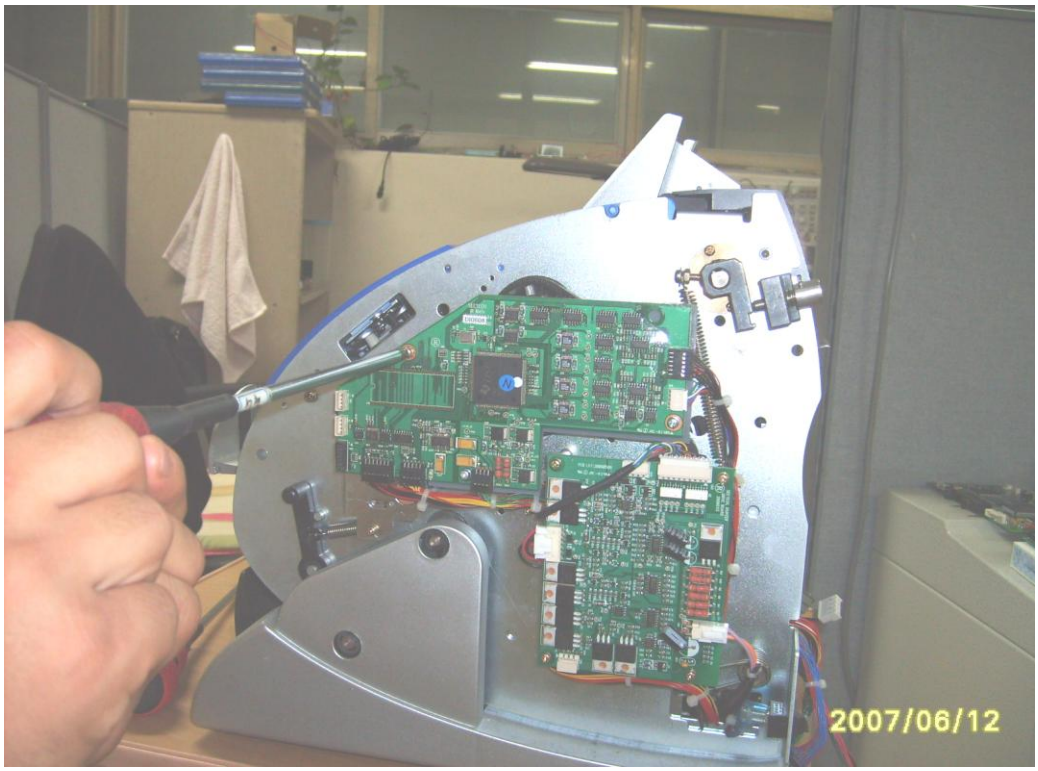

2. Disconnect all harnesses from IR main board.

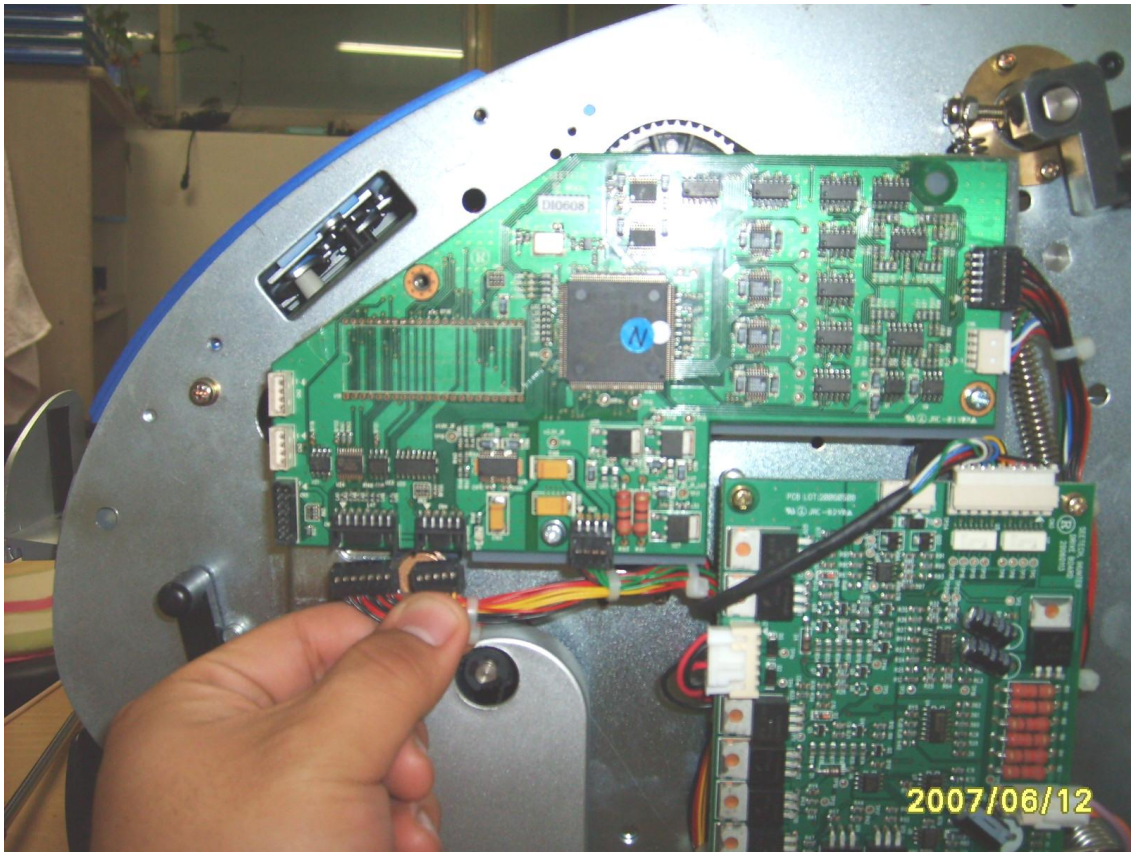

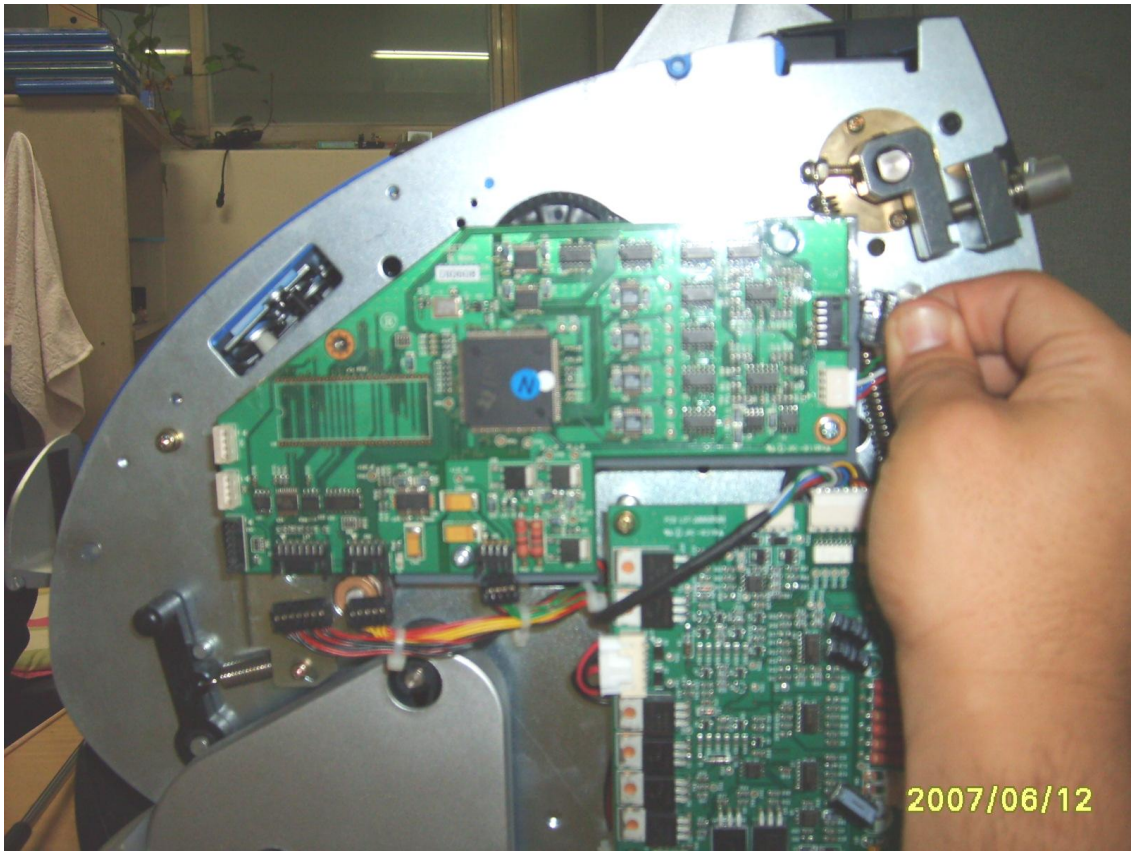

3, Remove IR main board from machine.

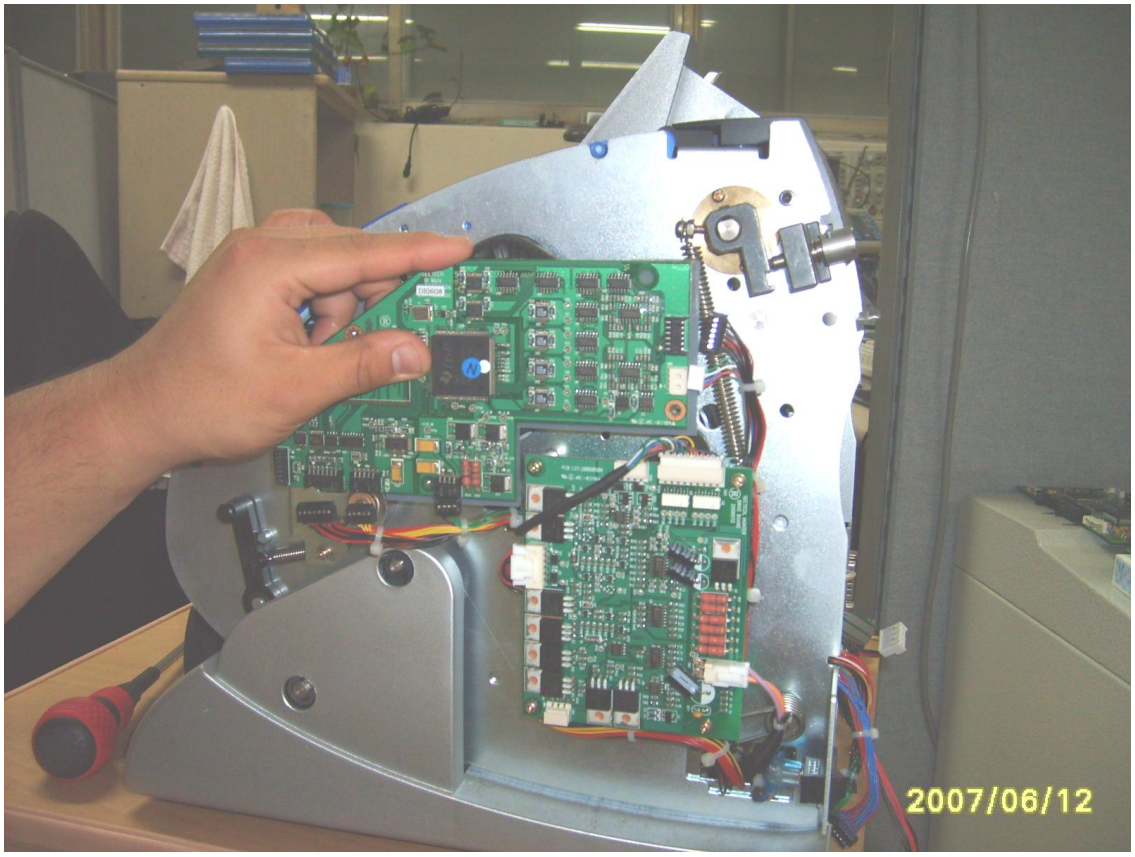

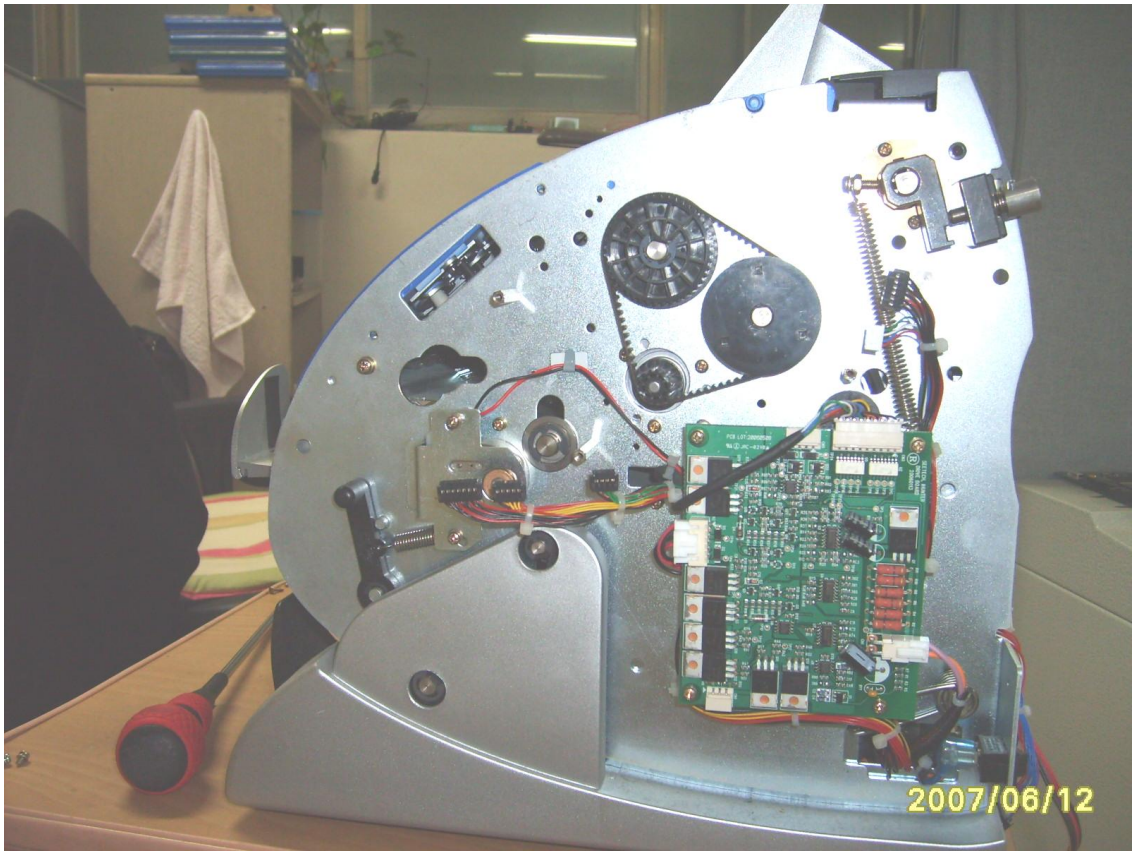

4. Cut all cable ties which fix harnesses of IR main board.

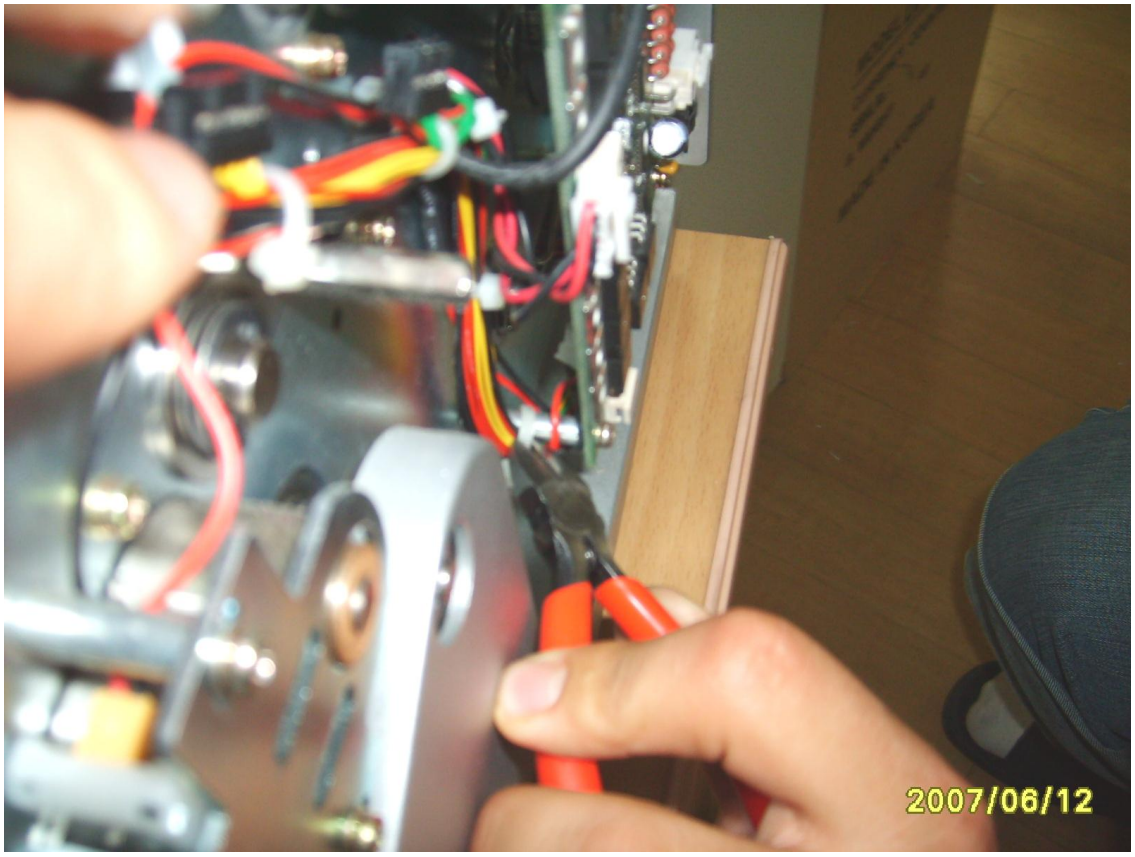

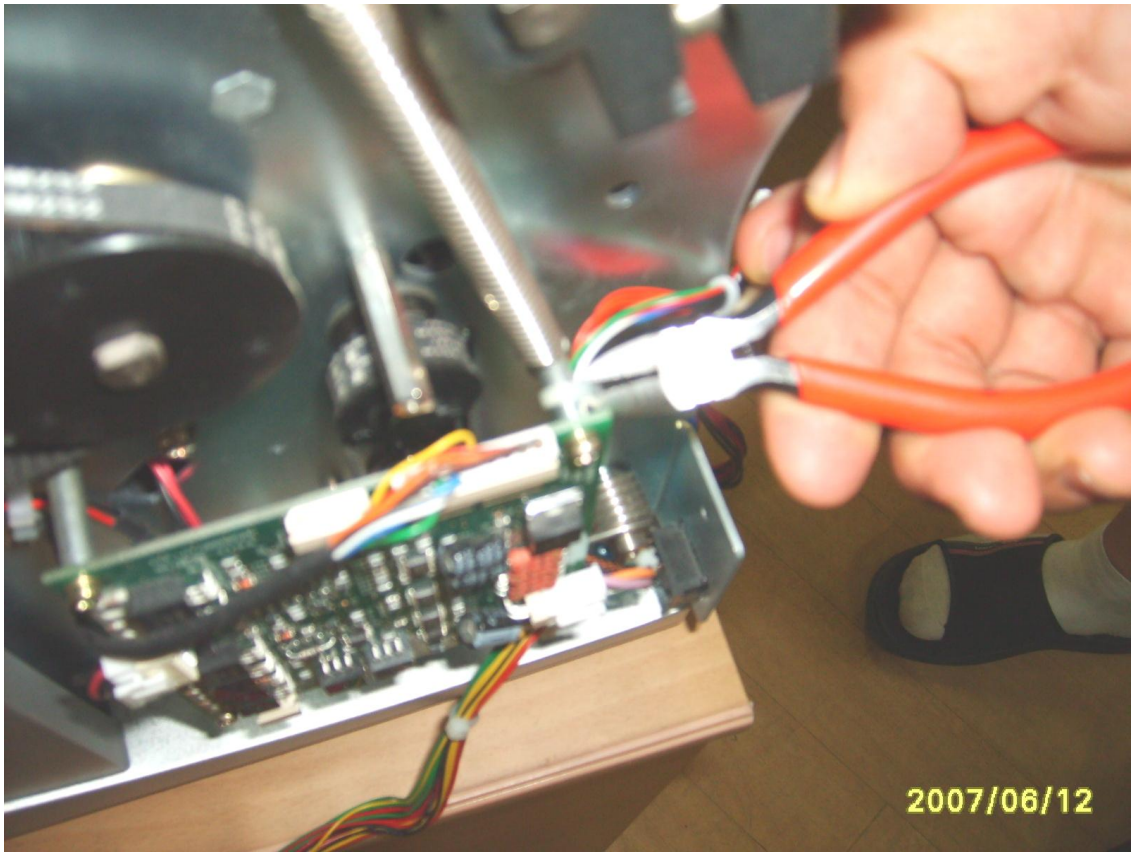

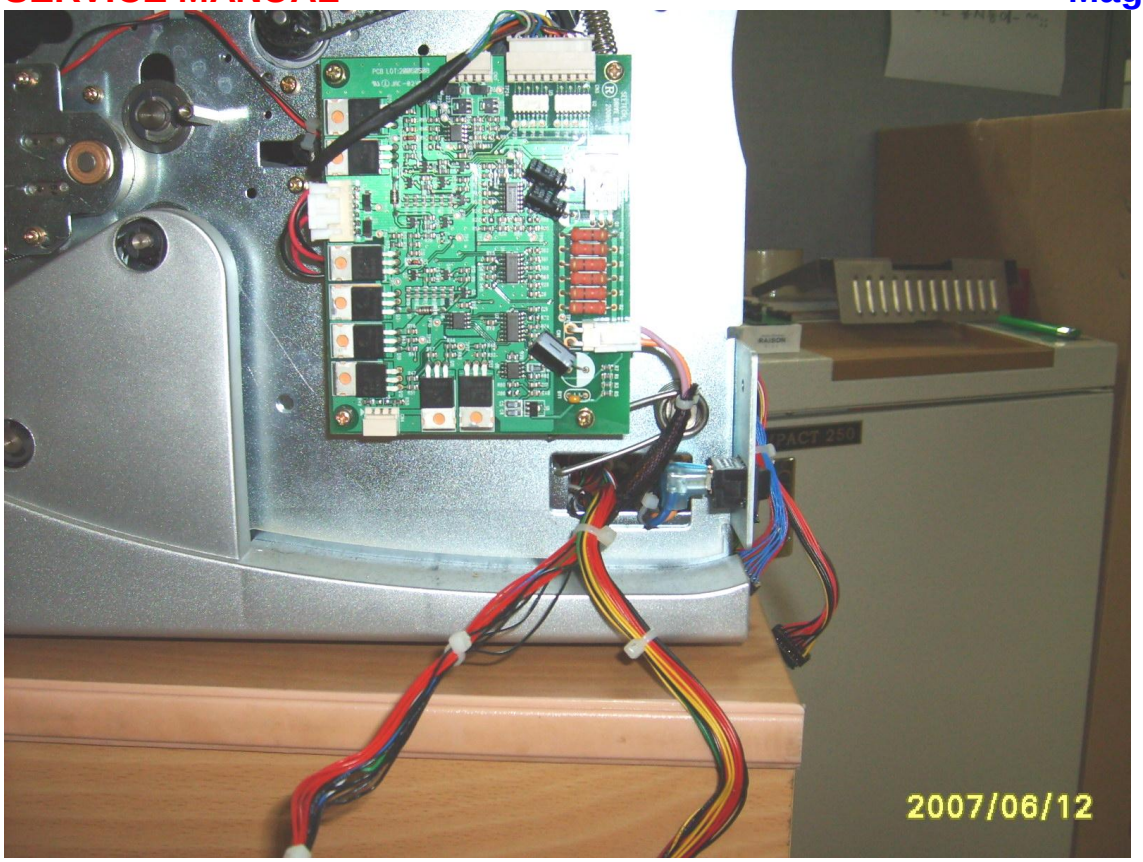

5. To disassemble IR connector board, disconnect all harnesses from IR connector board.

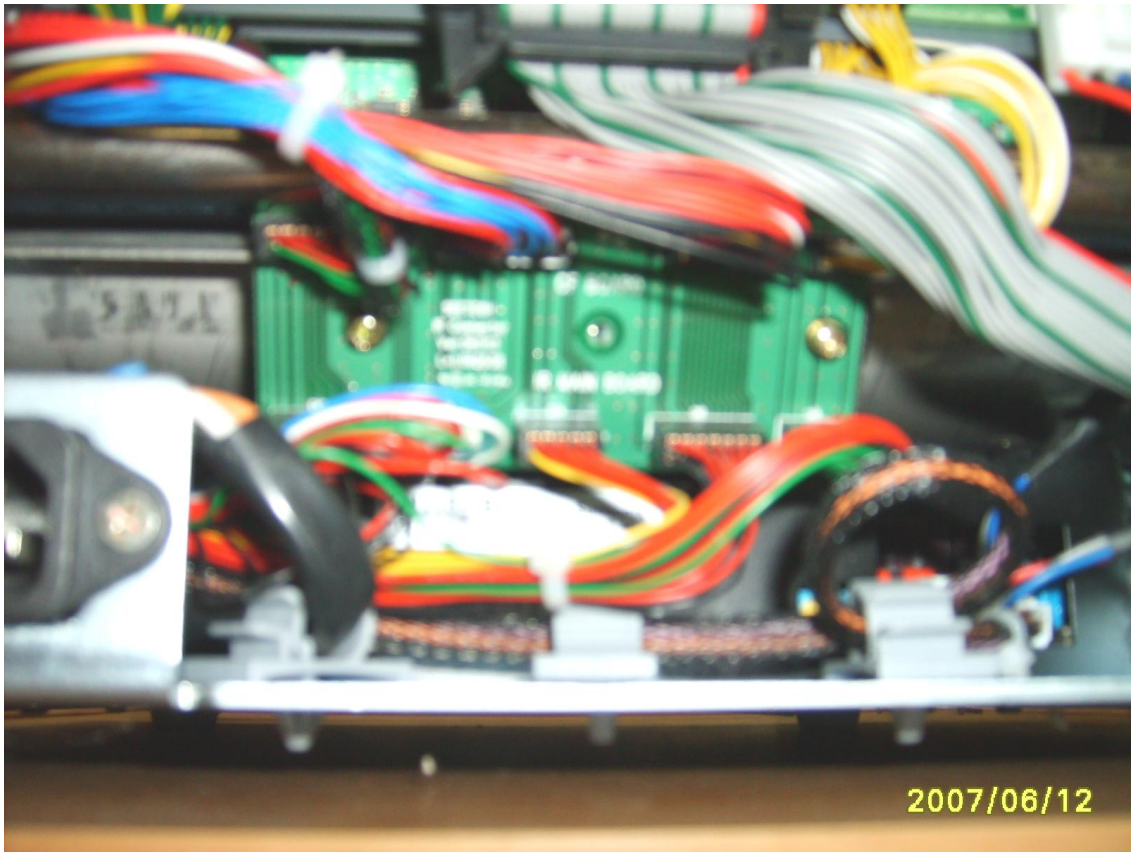

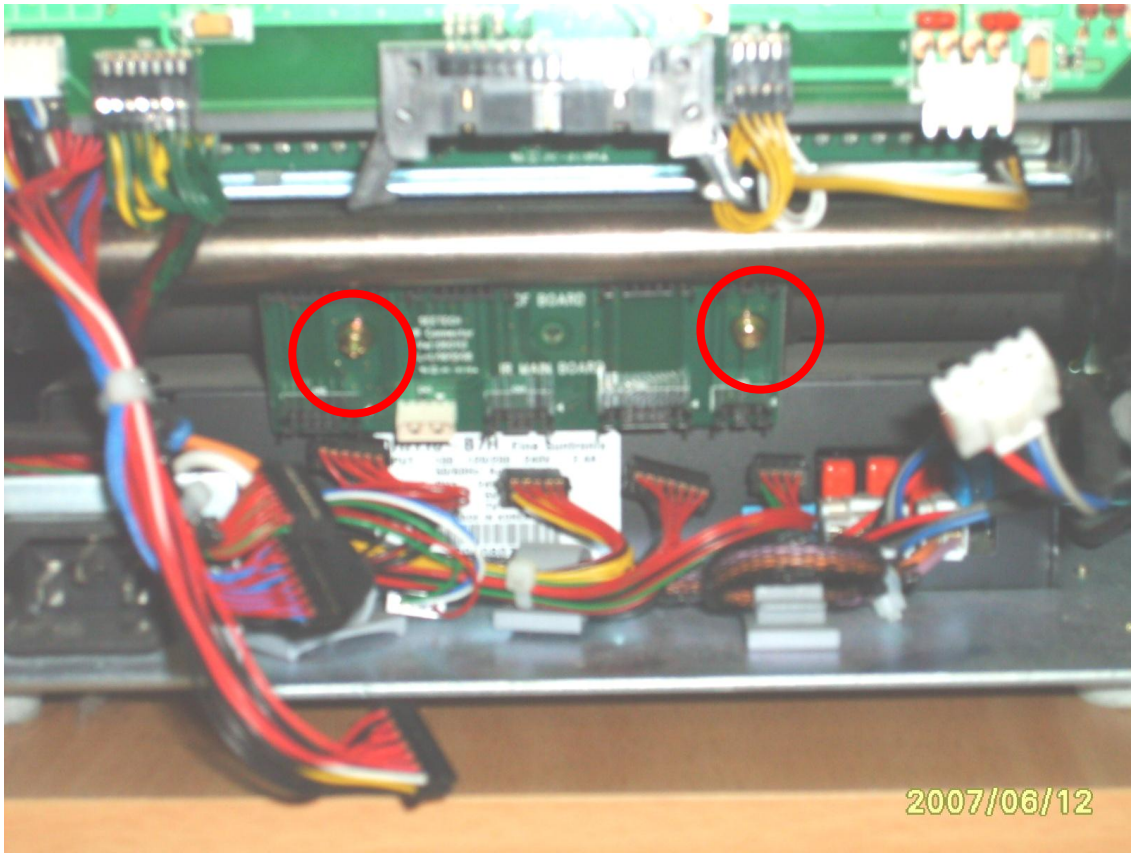

6. Tighten 2 screws which are on IR connector board.

7, Remove IR connector board from machine.

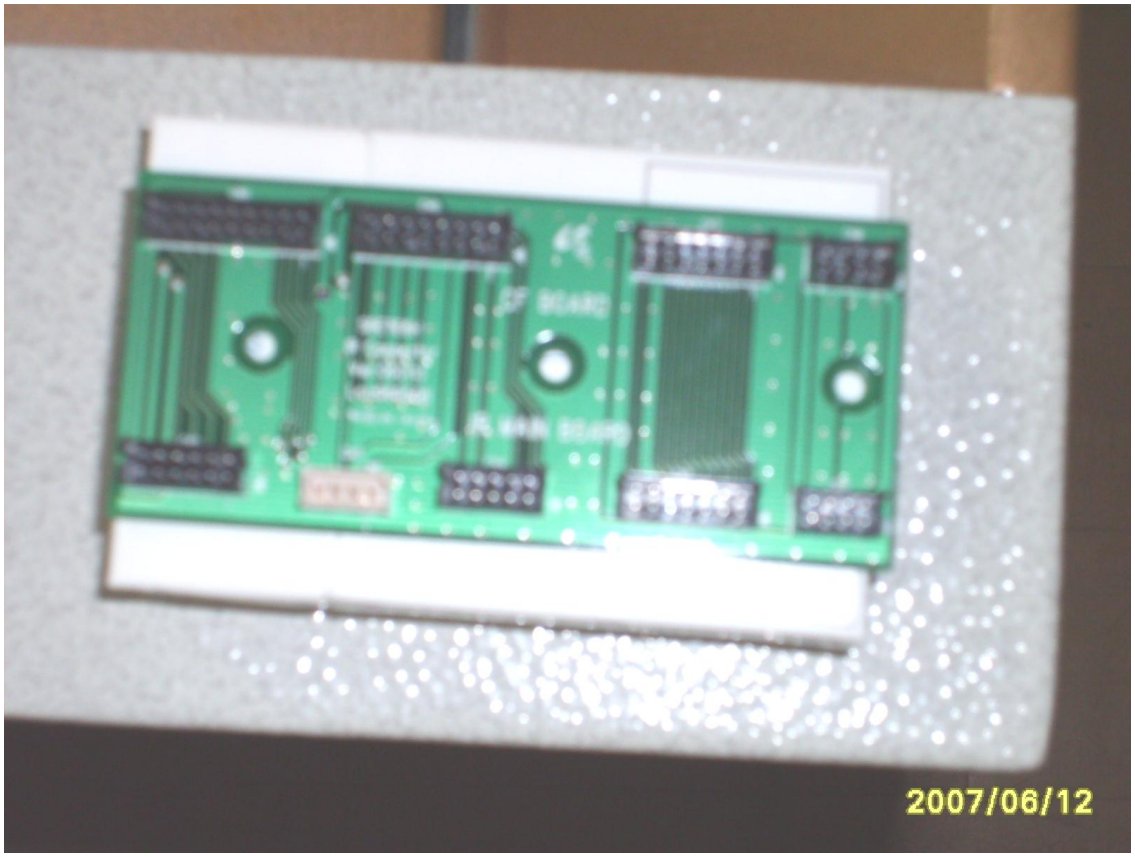

8. Remove all harnesses which come from IR main board.

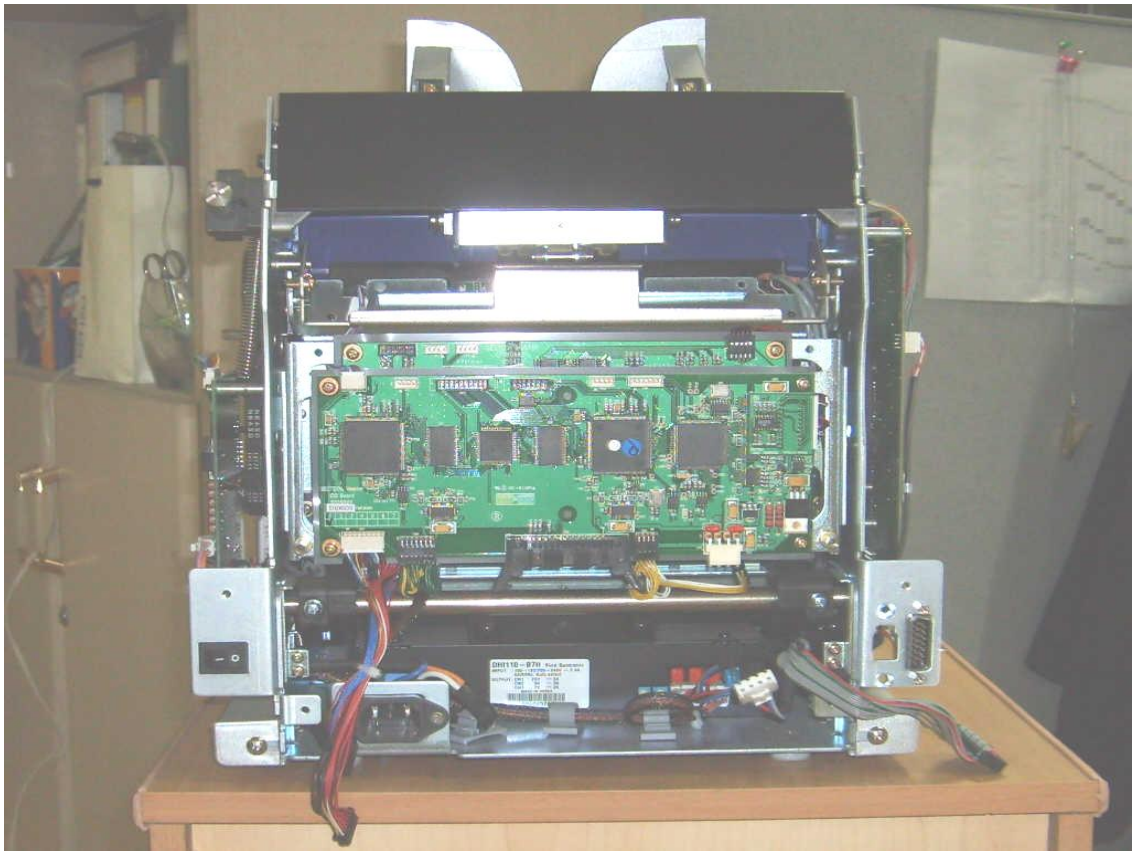

9. Remove Detector Module from machine.

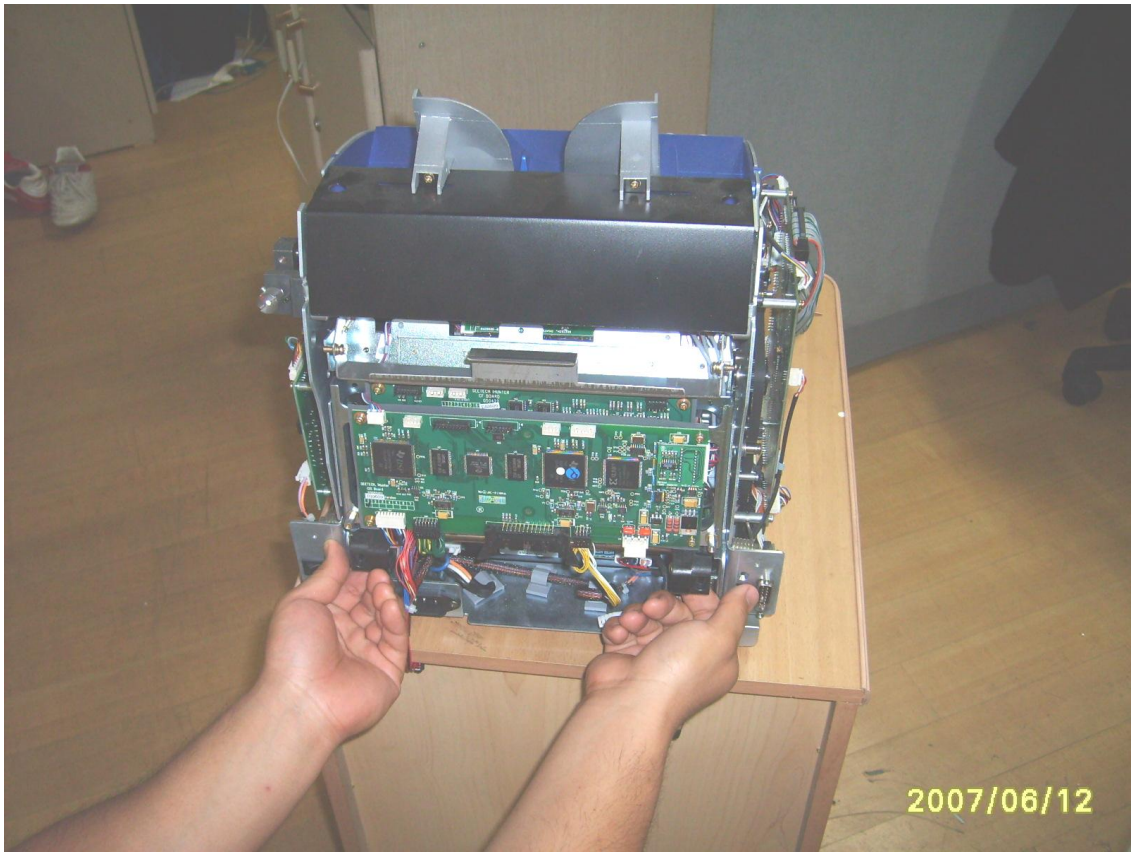

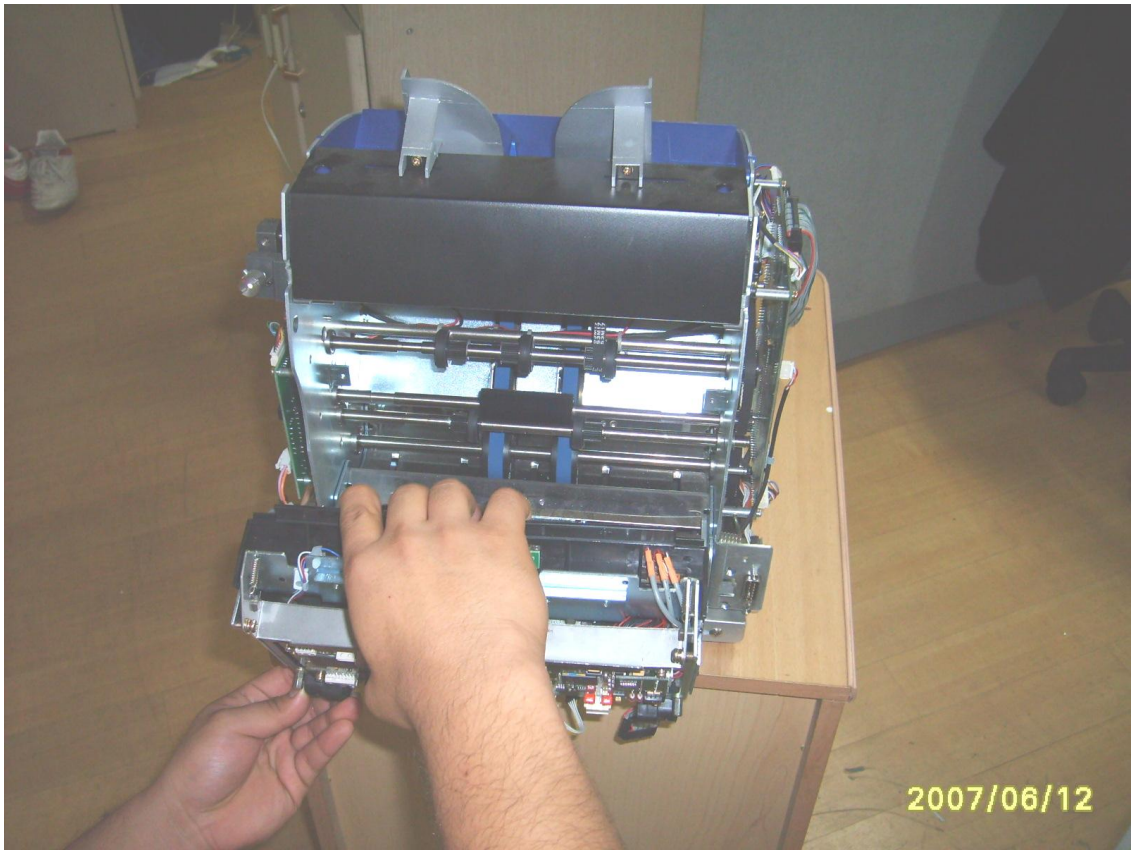

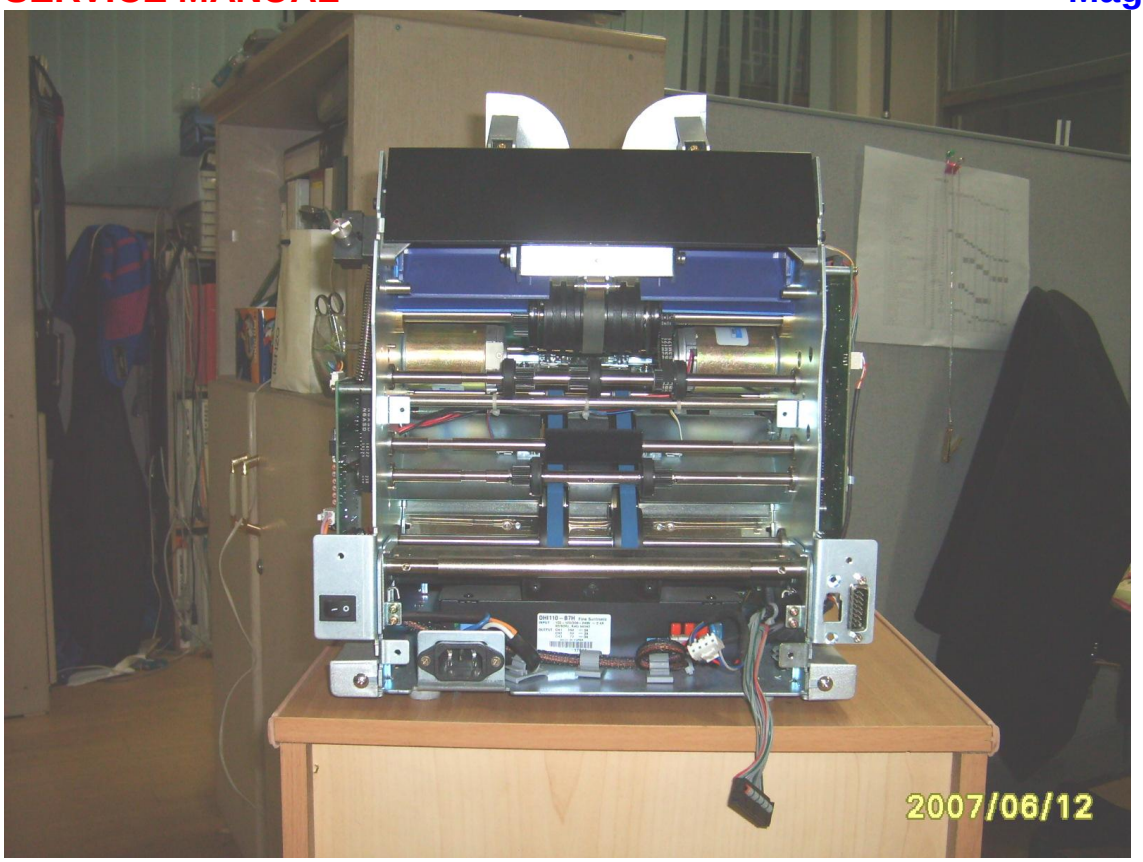
2007/06/12

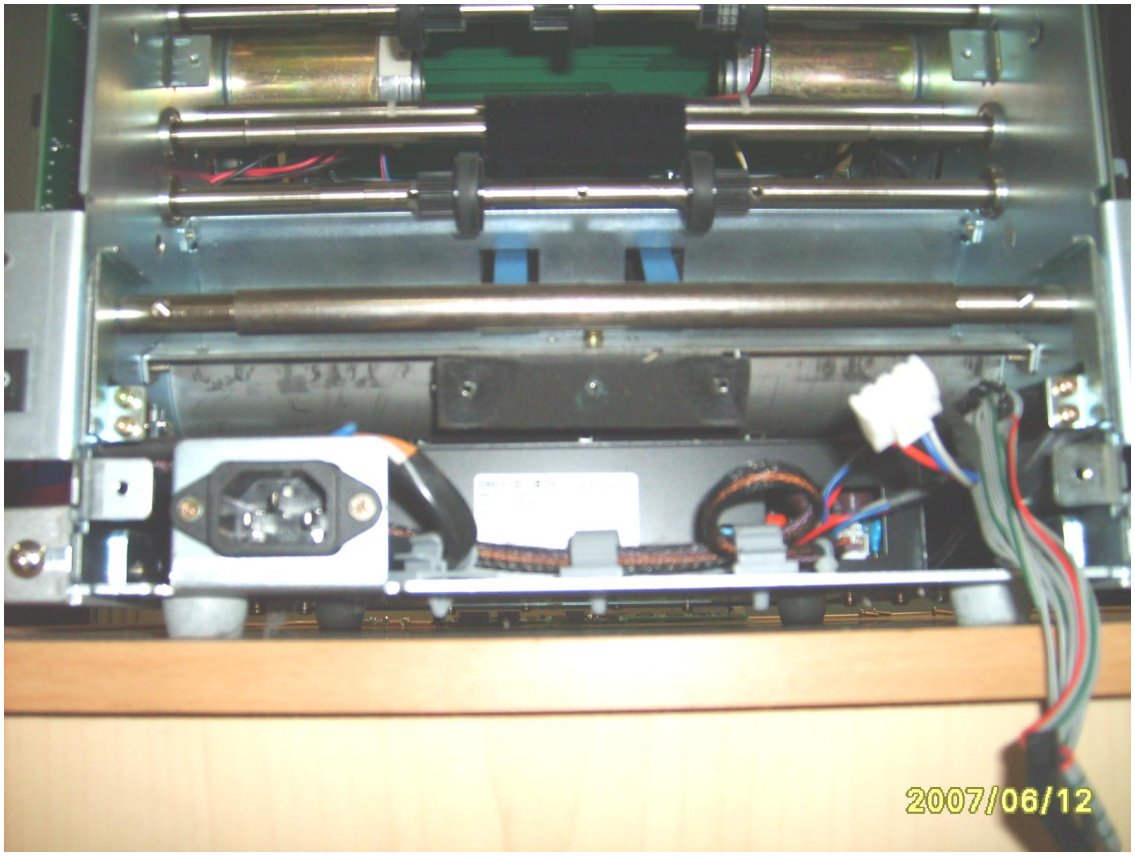
2007/06/12

10. To disassemble CIS main board, disconnect all harnesses from CIS main board.

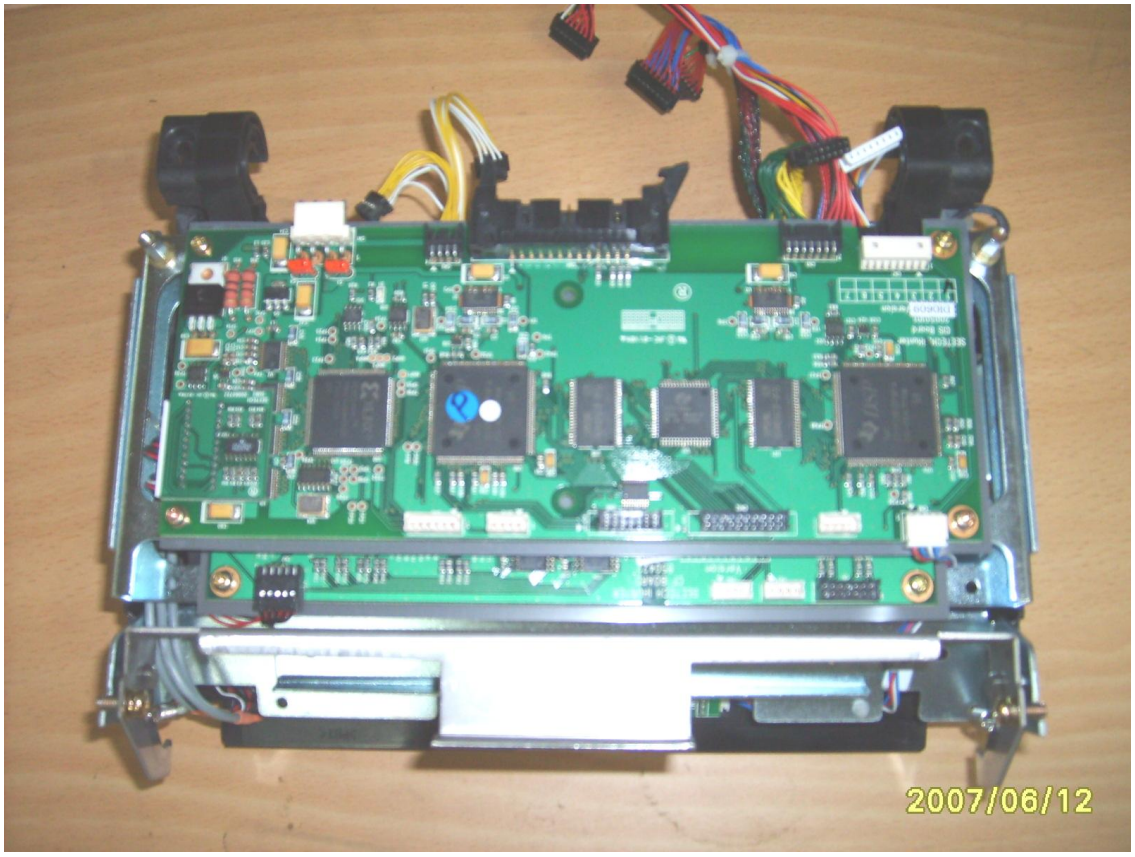

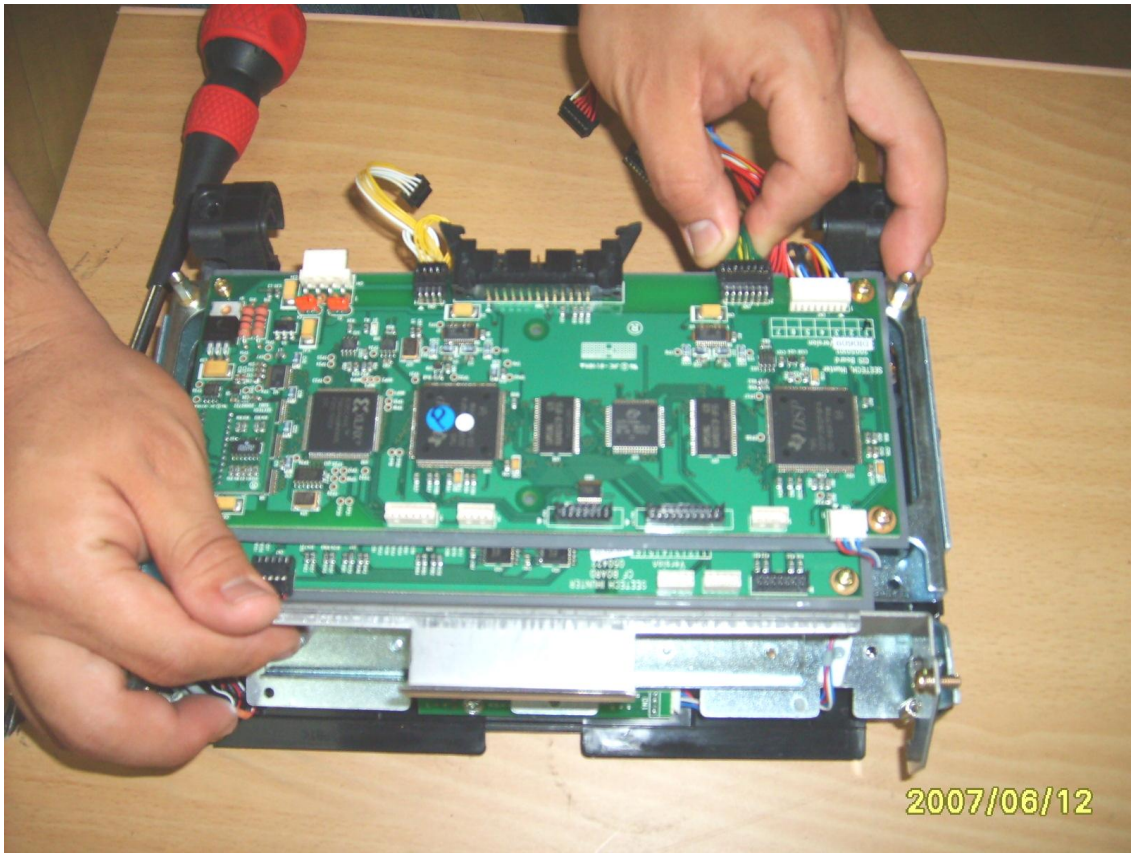

11. Remove 4 screws which fix CIS main board to detector module.

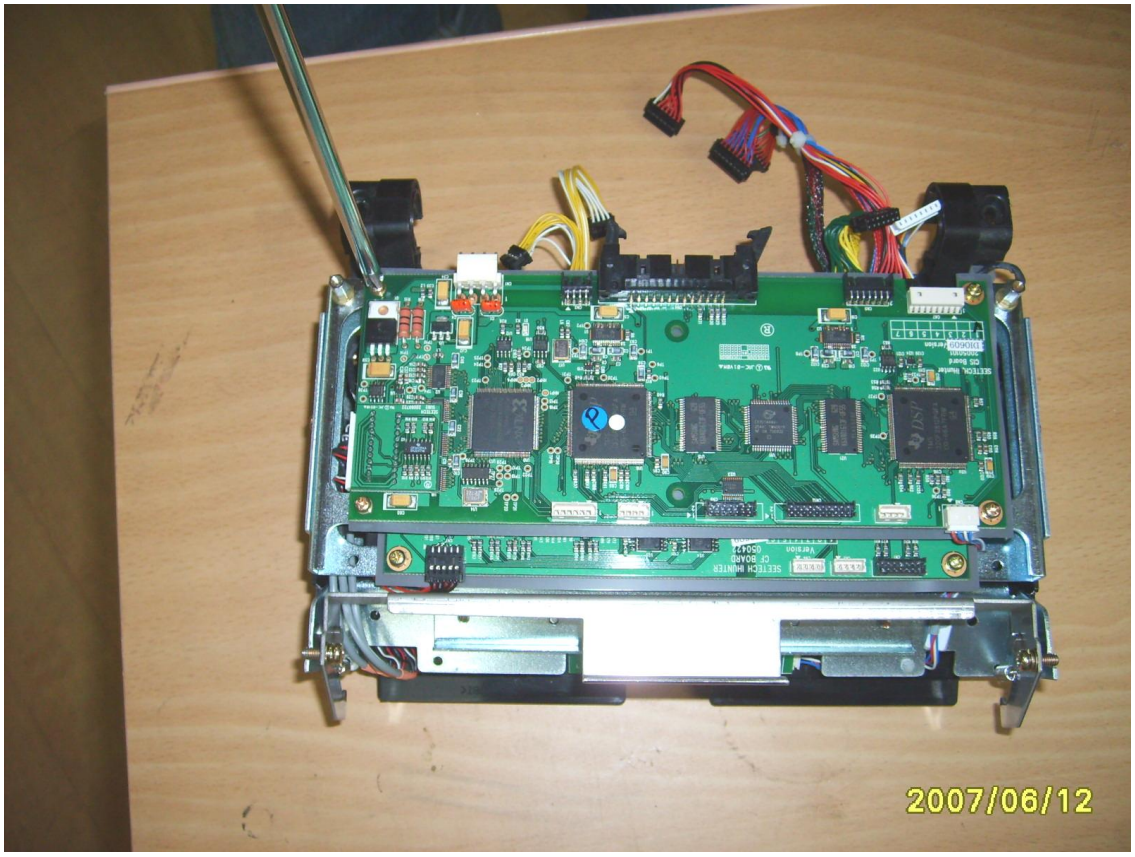

12. Remove CIS main board.

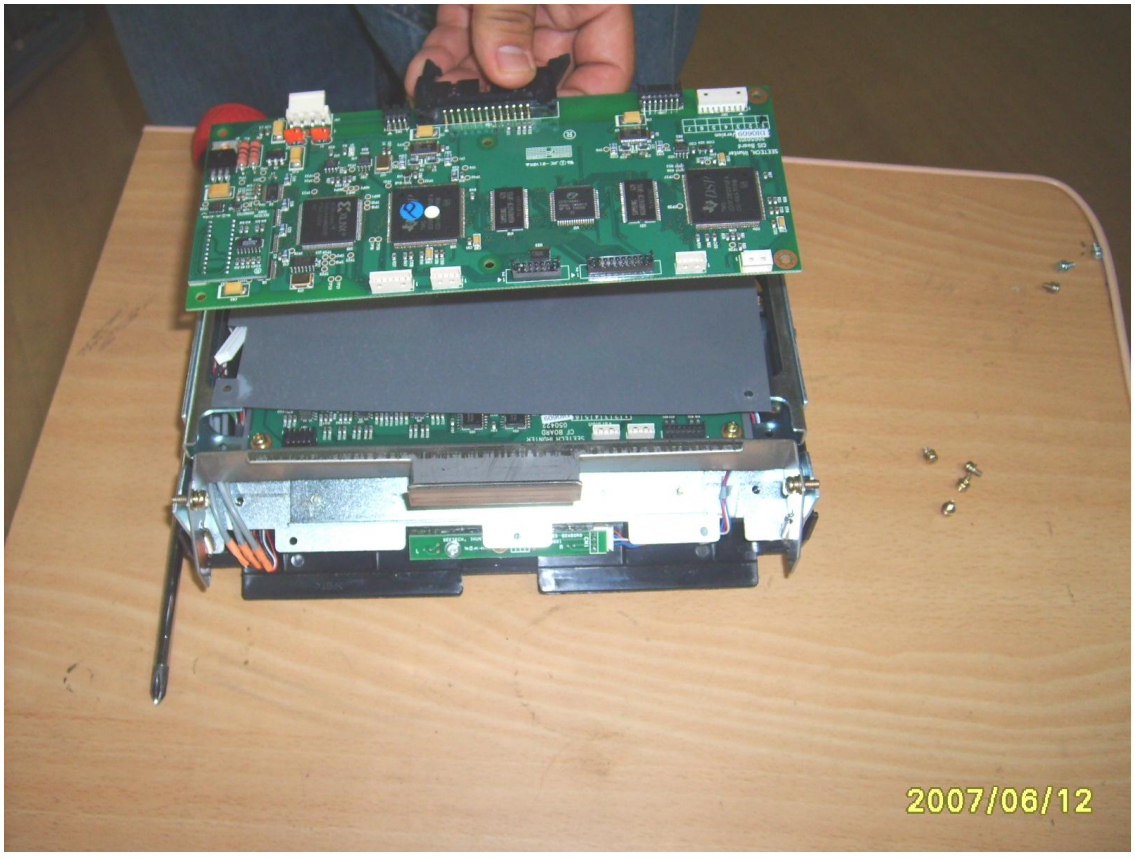

13. Disconnect all harnesses from CF main board and remove 4 screws which fix CF main board to detector module.

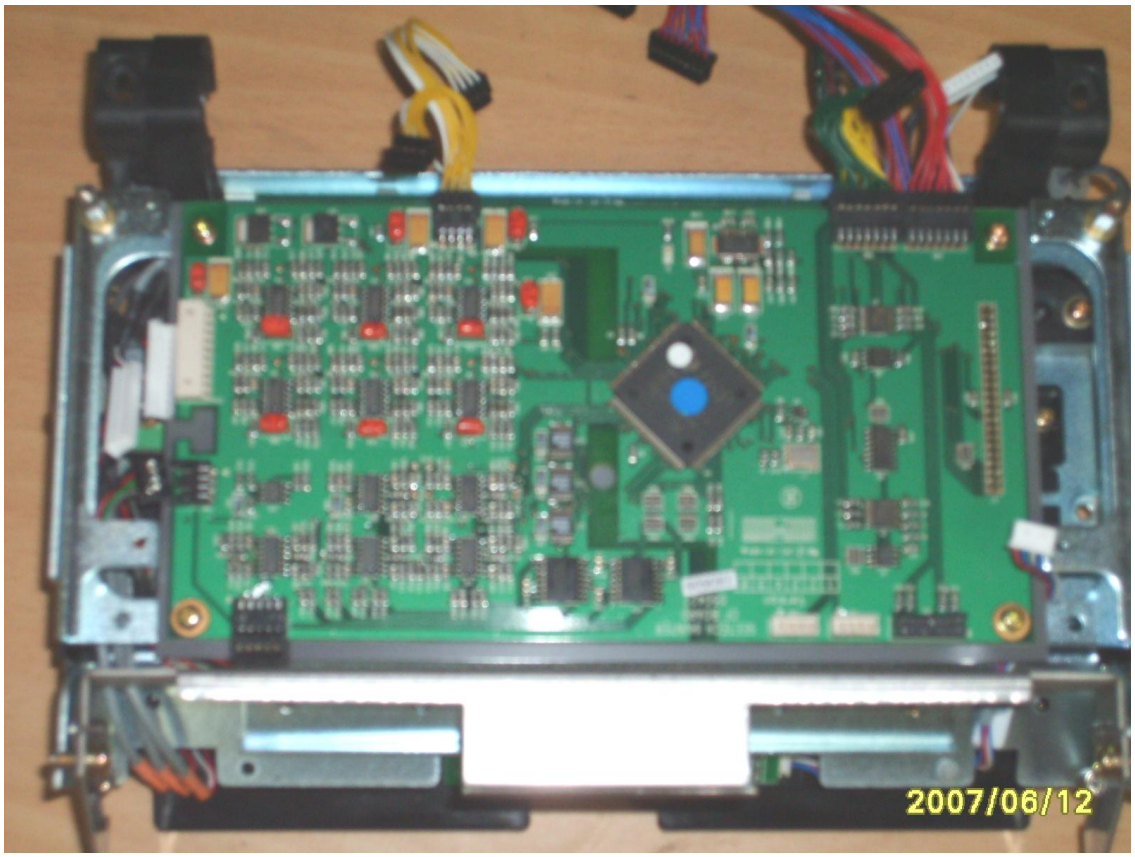

14. Remove CF main board from detector module.

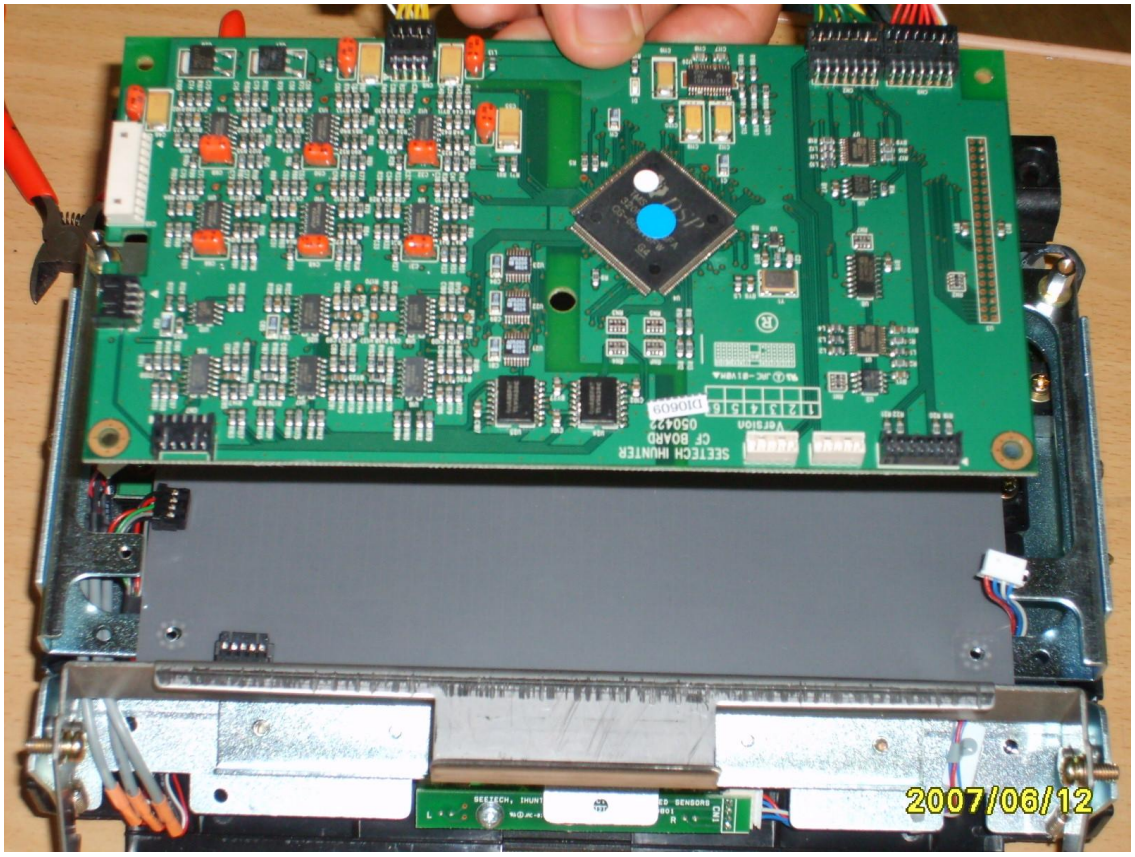

15. To assemble CF/IR main board, arrange harnesses and put CF/IR main board as below.

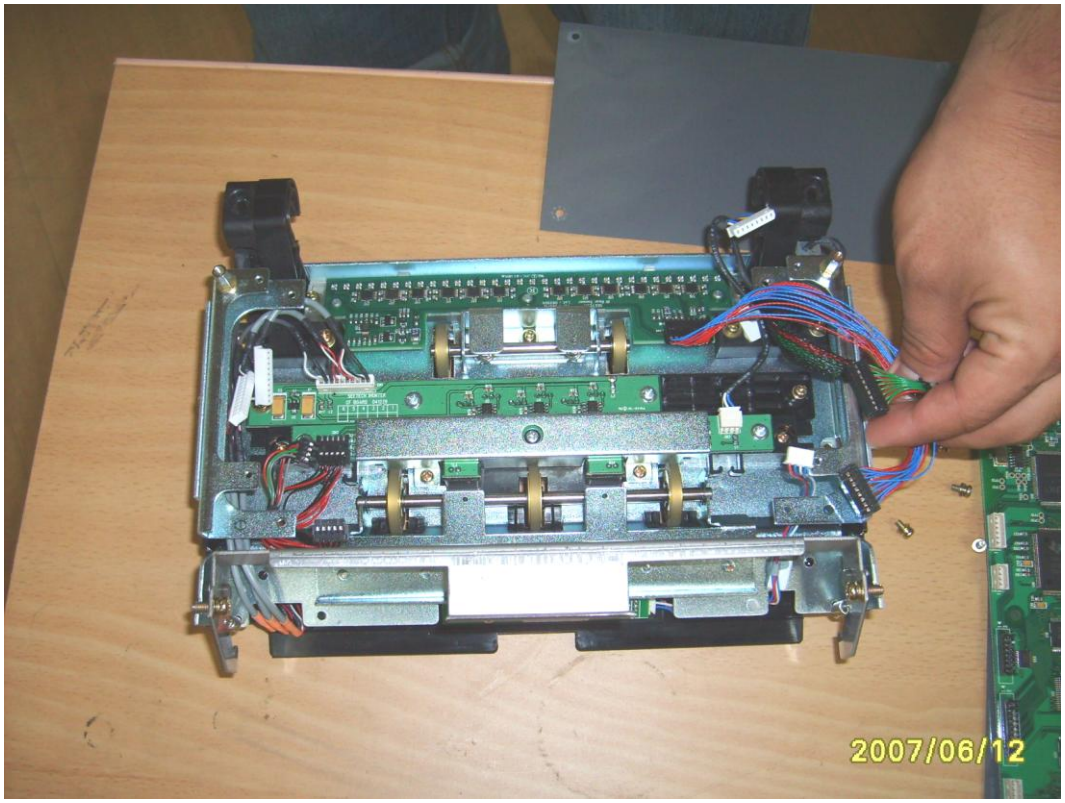

2007/06/12

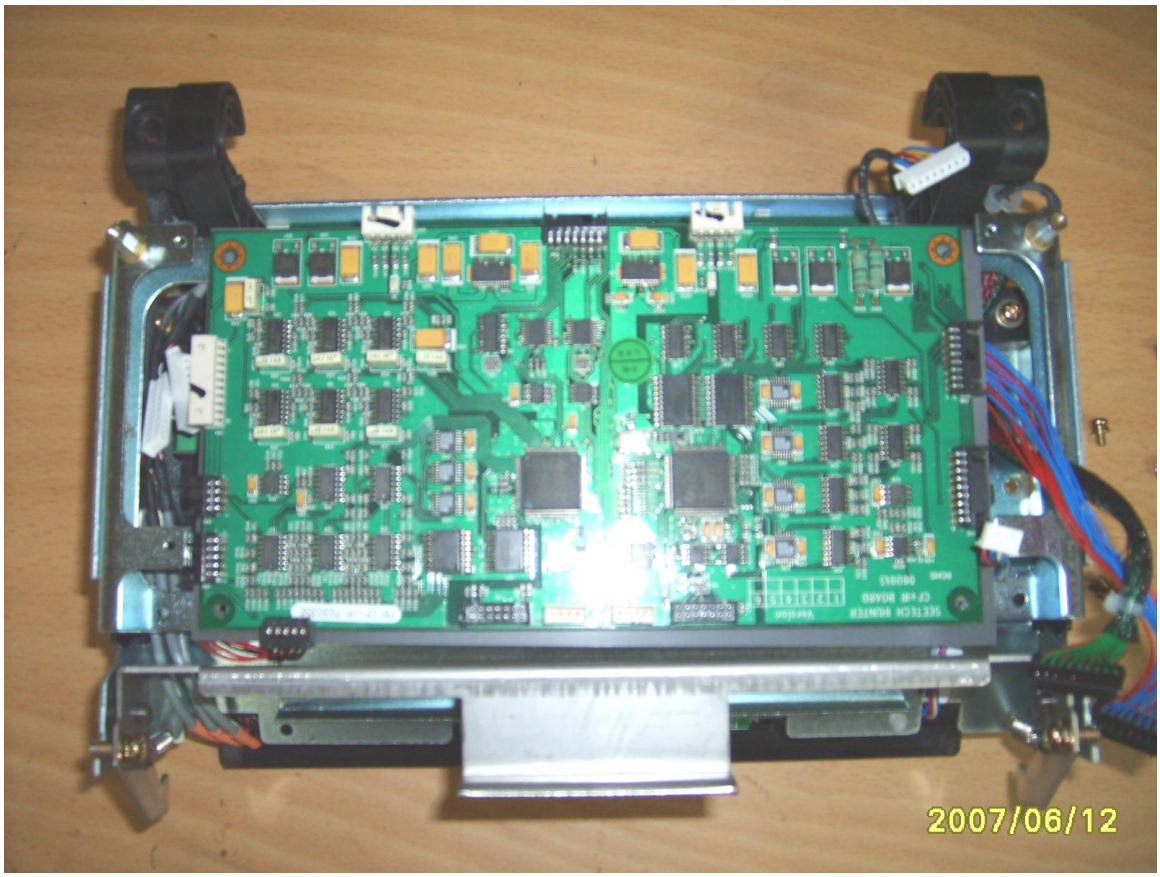
2007/06/12

16. Connect harness referring to below pictures.

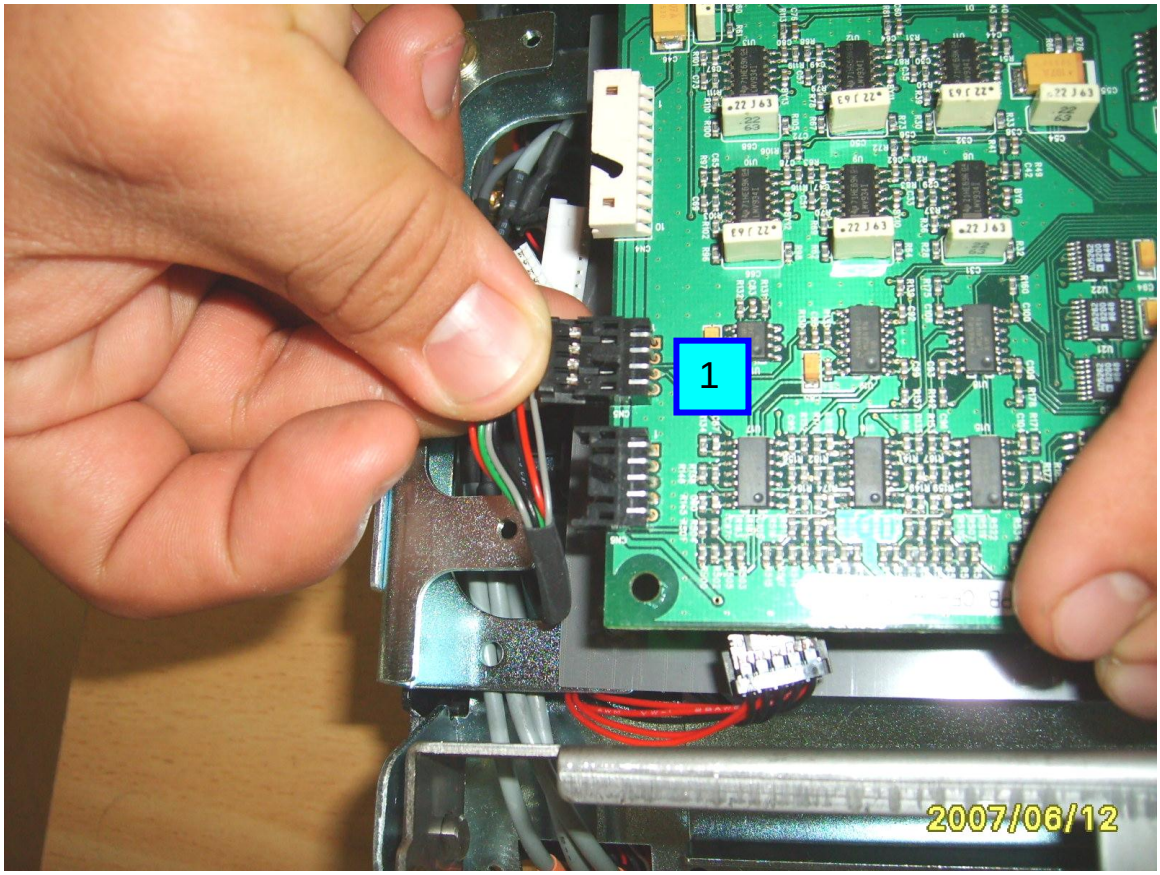

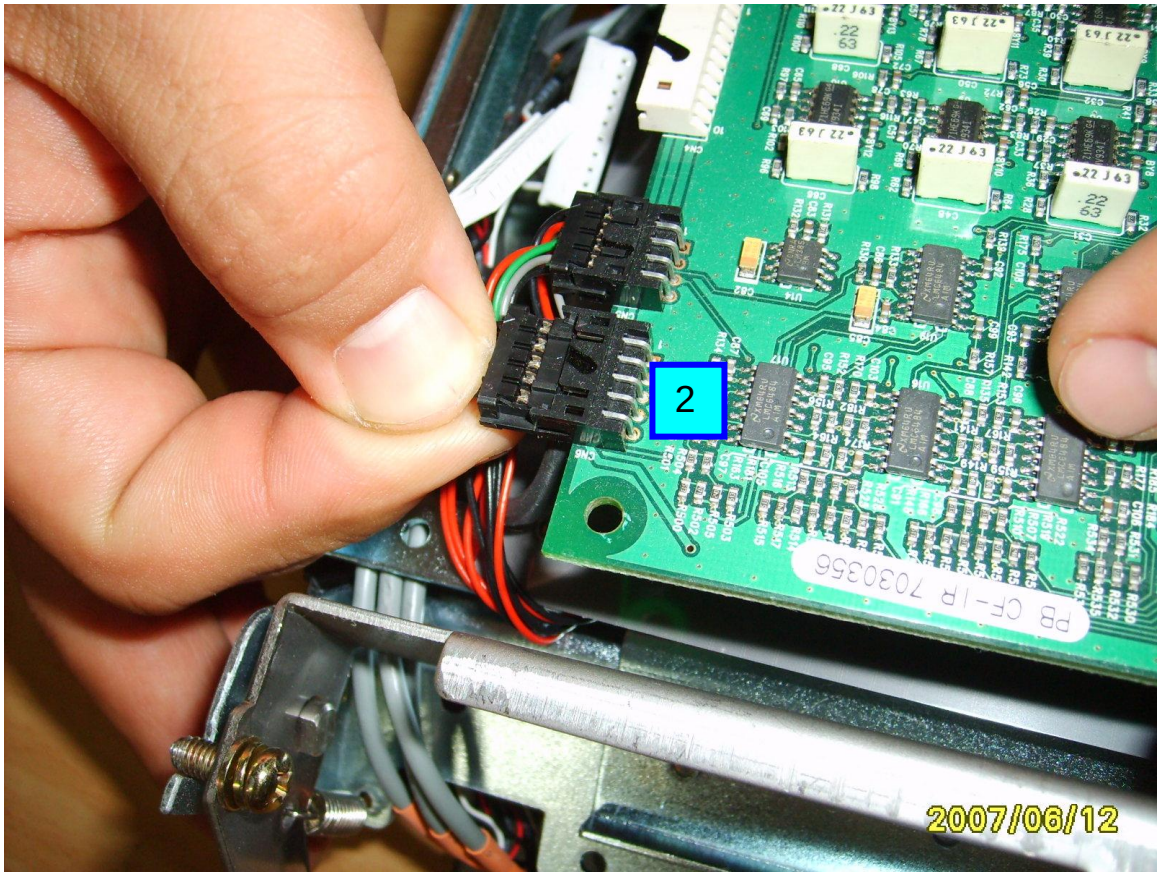

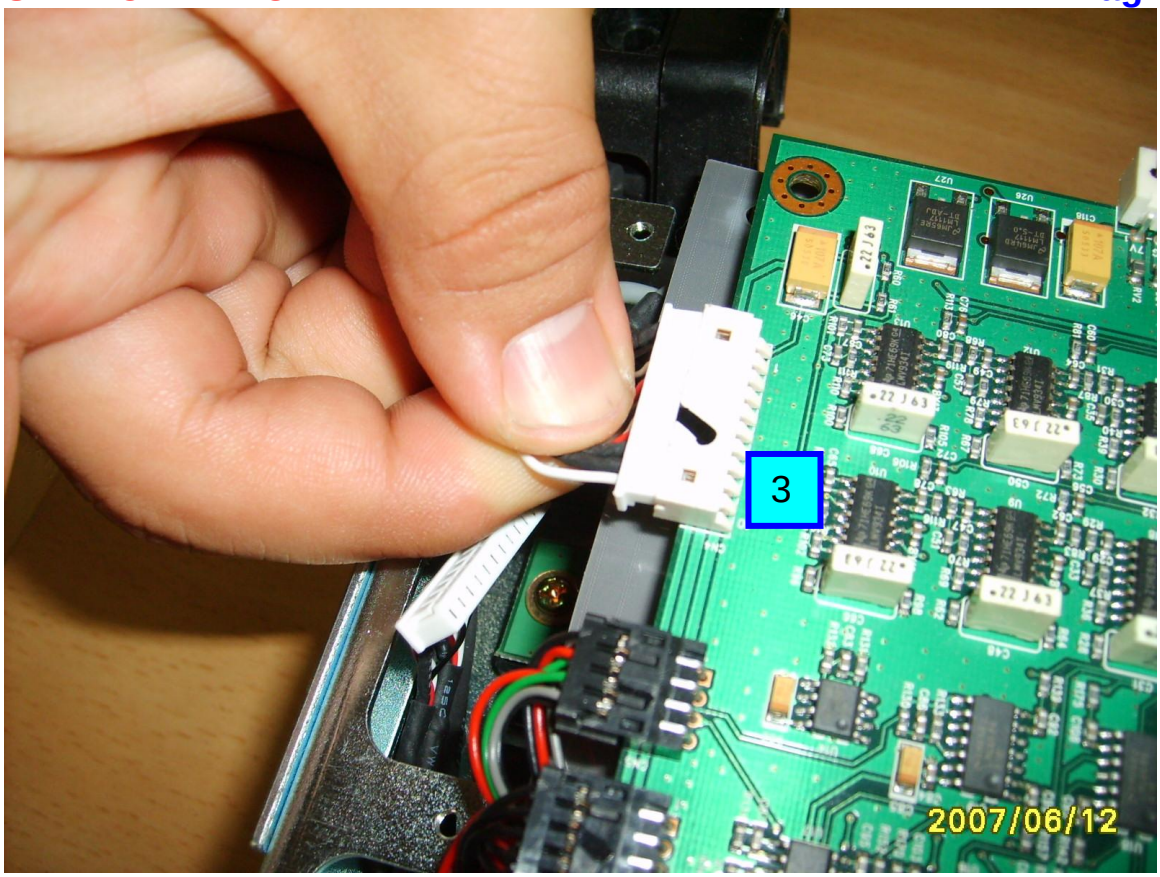
3
2007/06/12

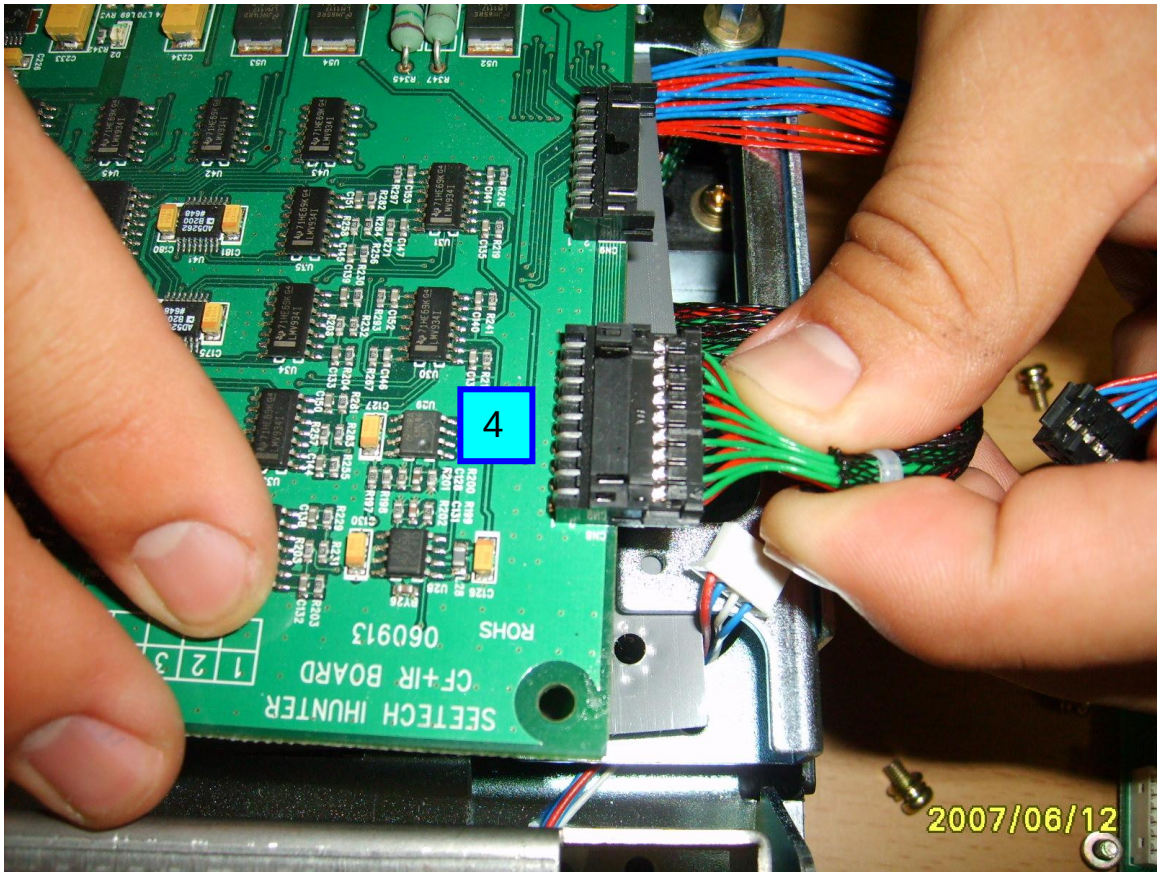
4
SEETECH IHUNTER
CF+IR BOARD
060913
ROHS
2007/06/12

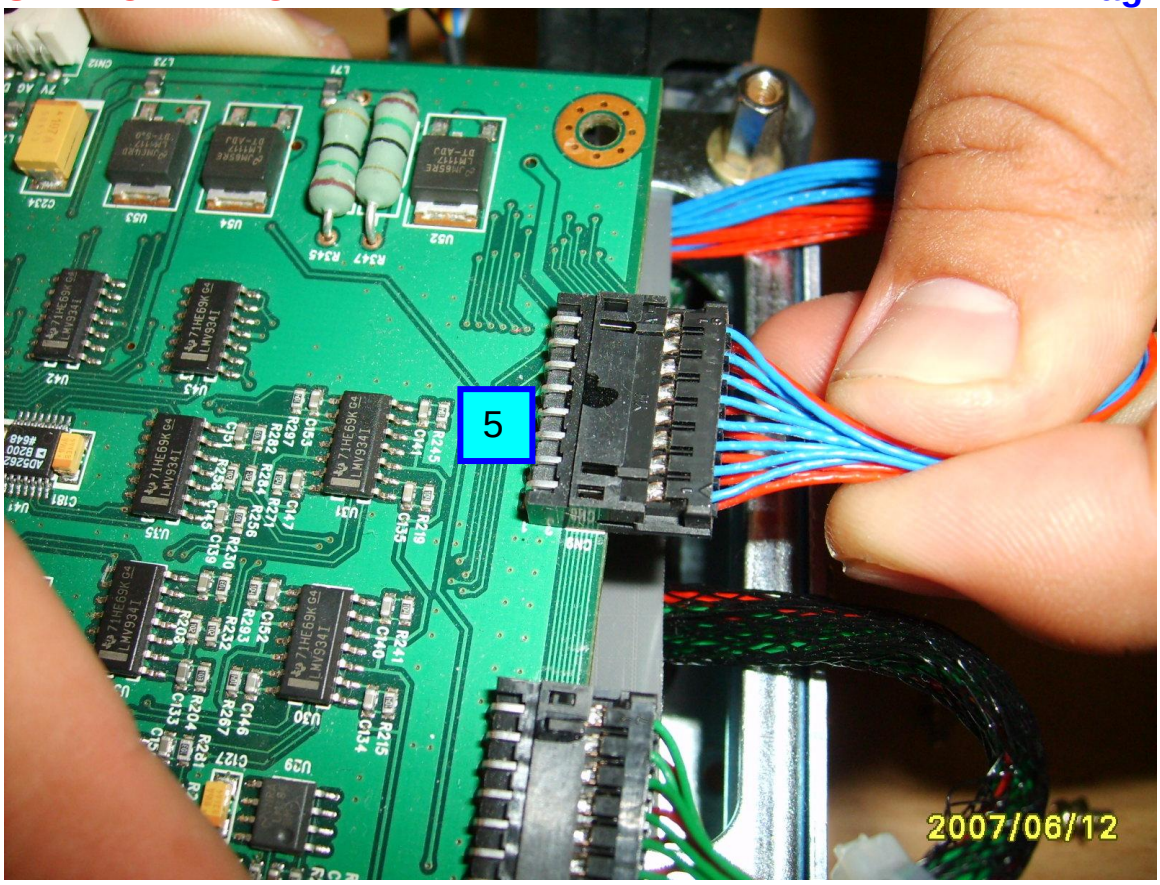

17. After connect 5 harnesses, tighten 4 screws to fix CF/IR main board to detector module.

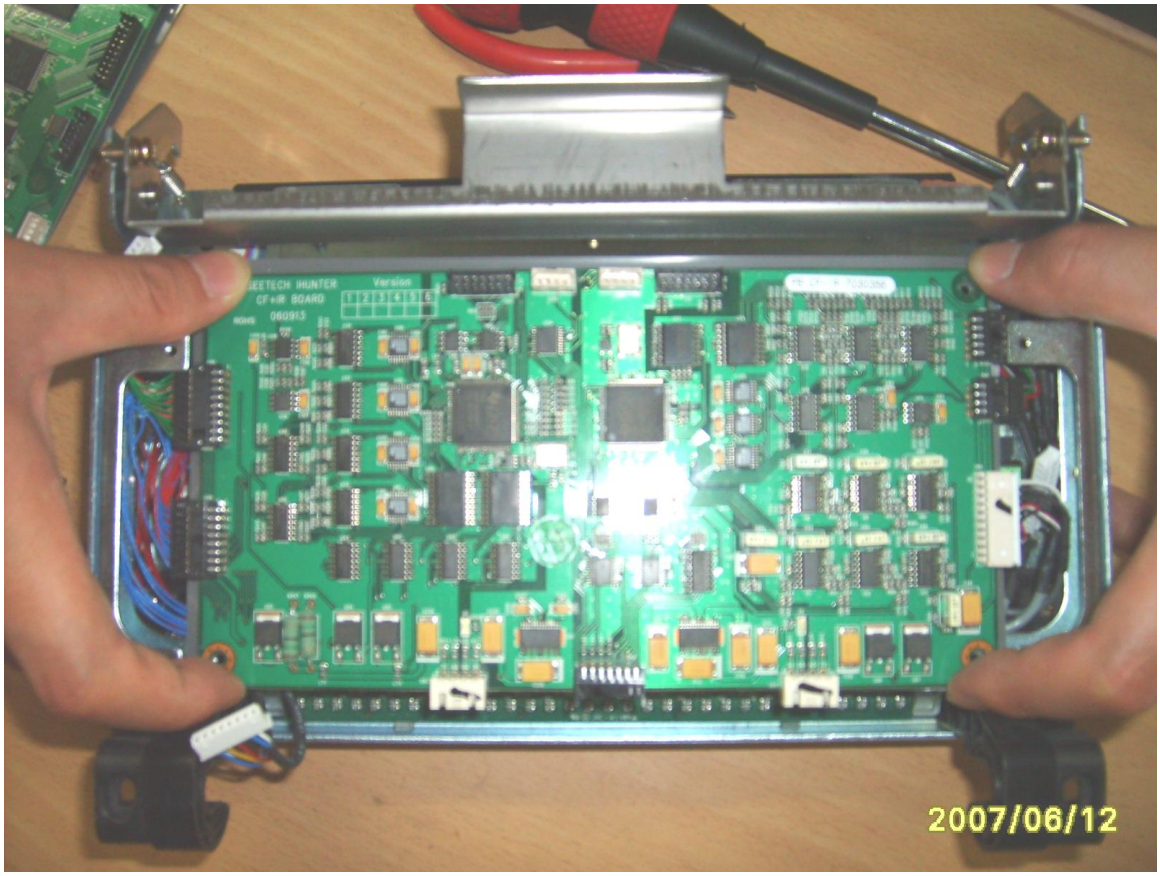

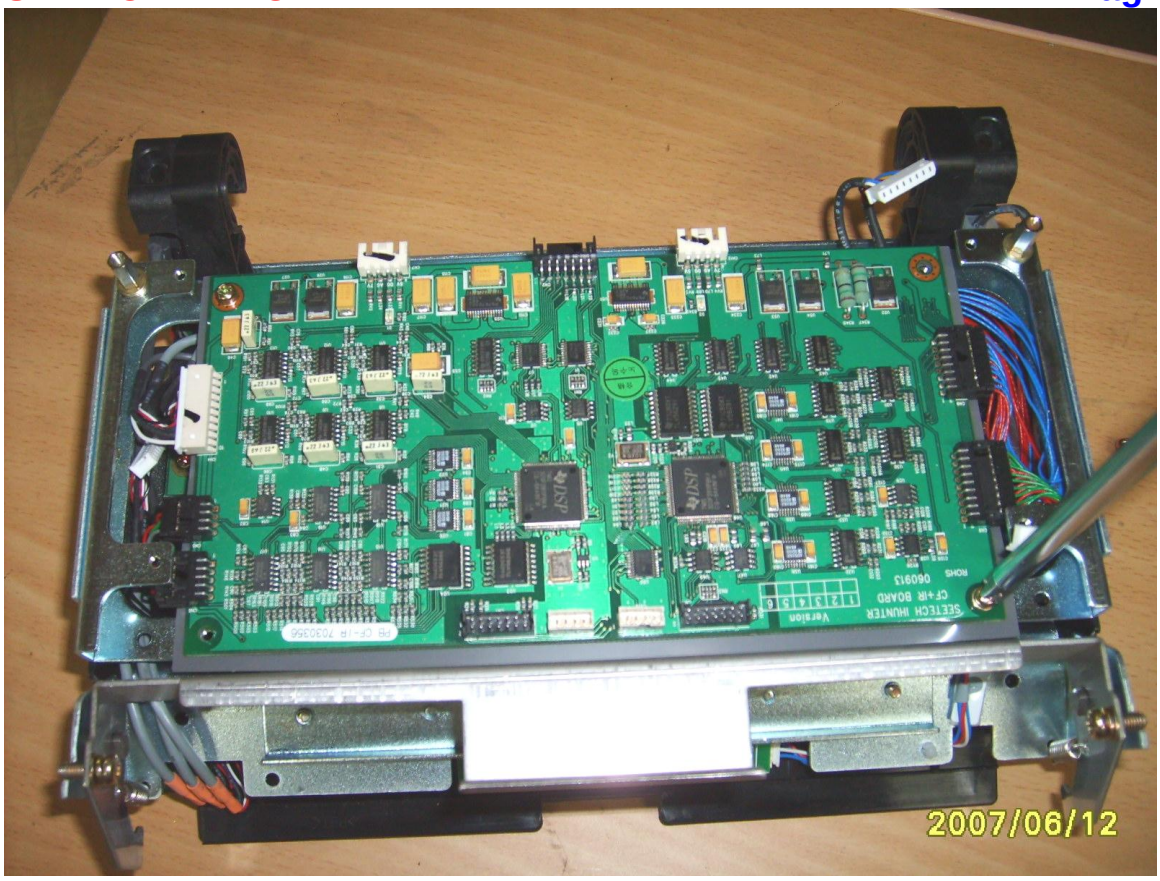

18. Connect Harness 6 to CF/IR main board.

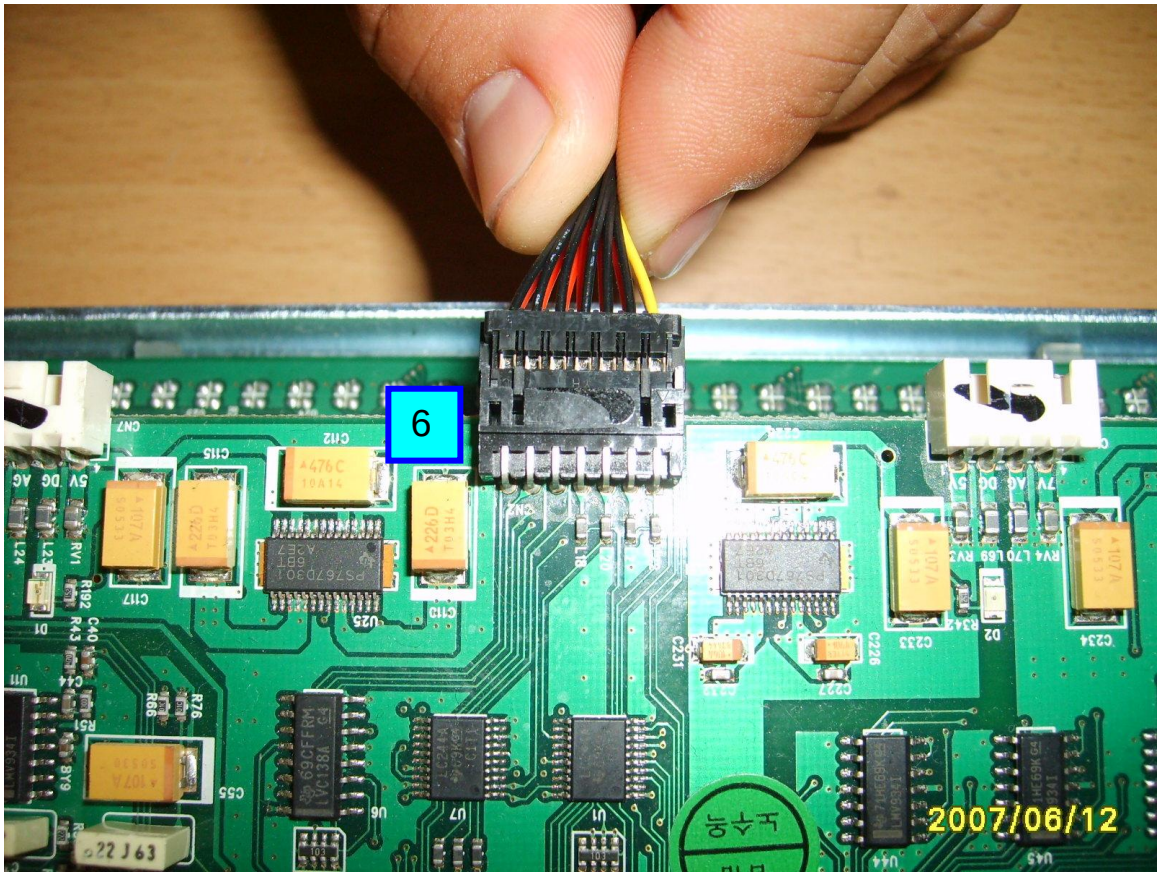

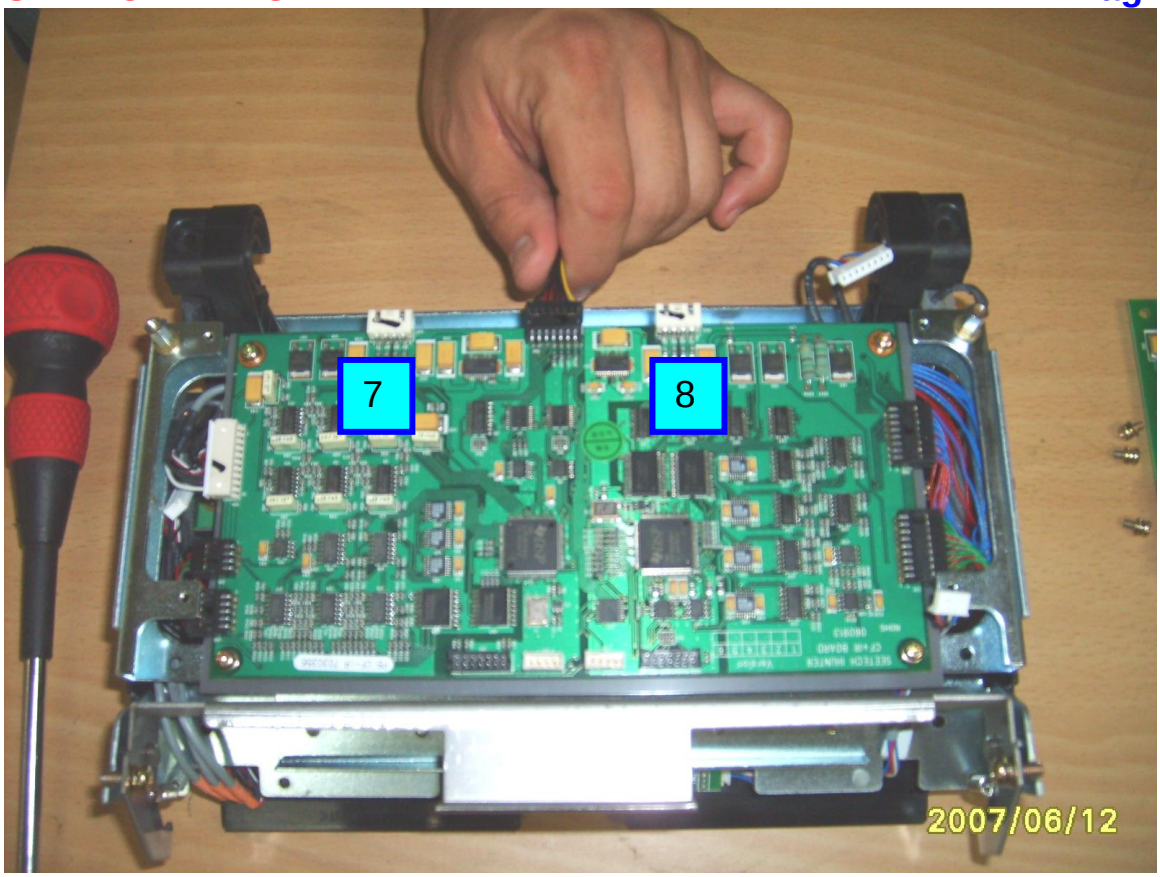

19. Connect Harness 7 to CF/IR main board.

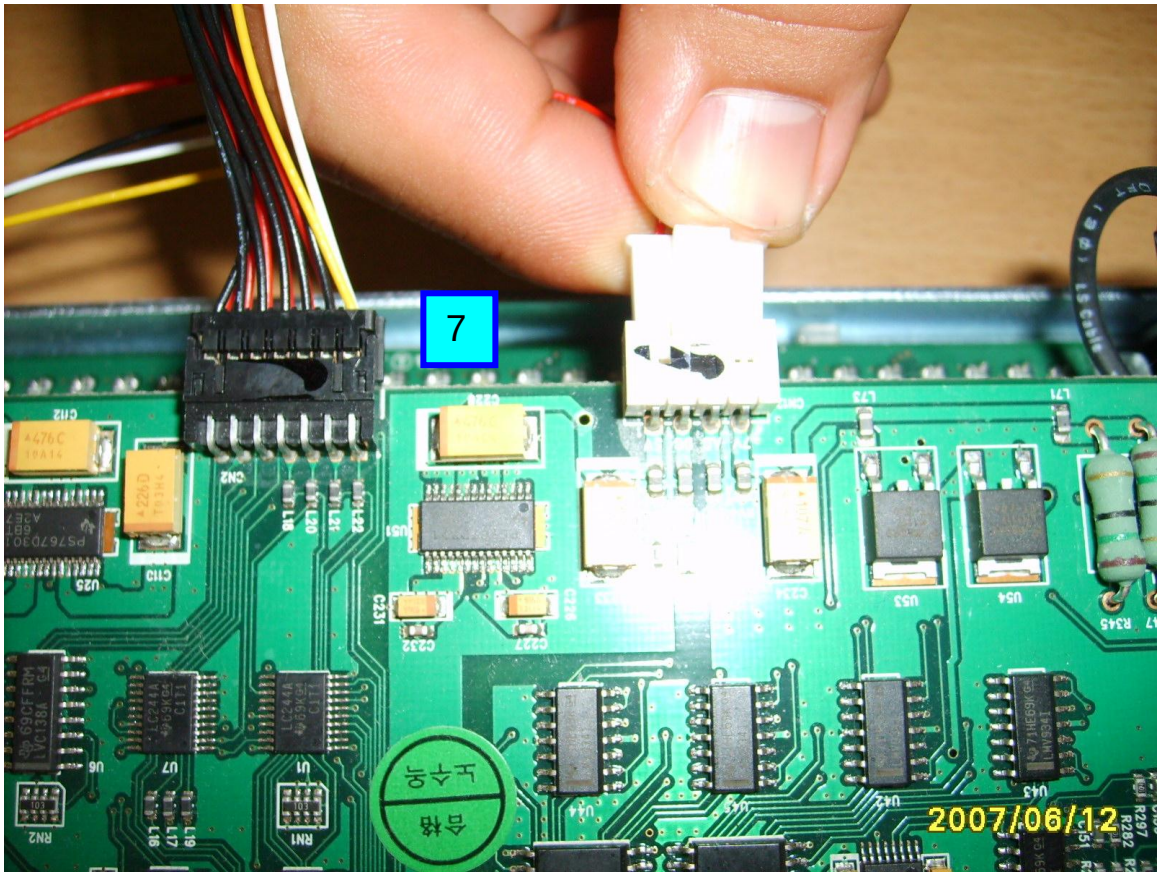

20. Connect Harness 8 to CF/IR main board.

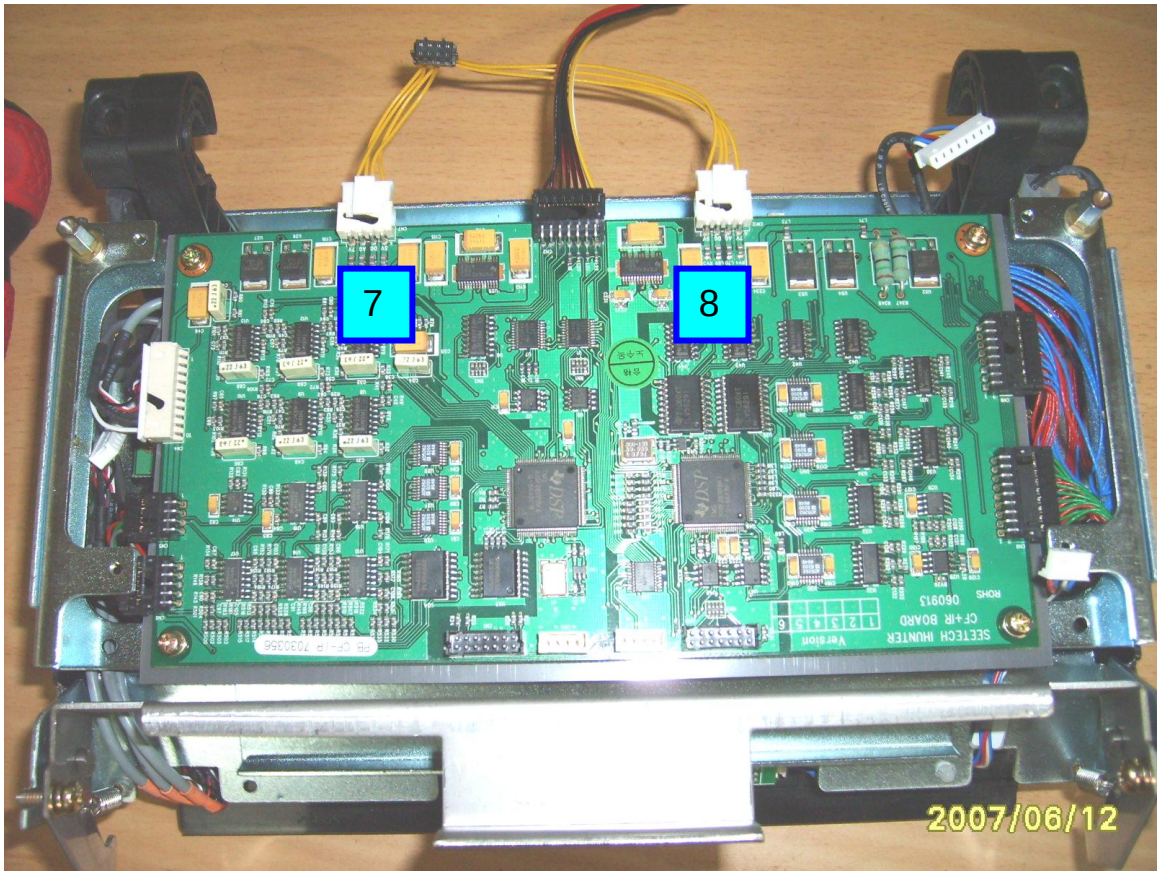

22. To assemble CIS main board, connect all harnesses as below.

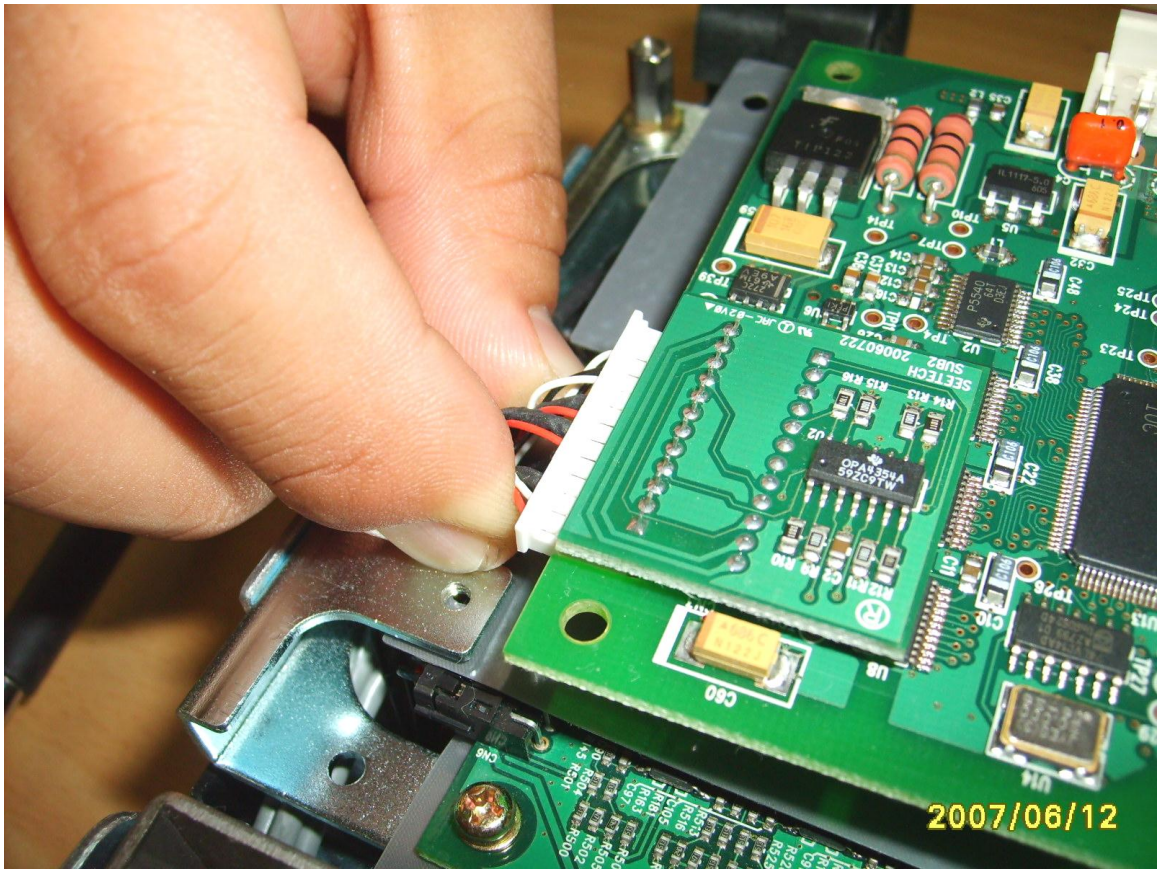

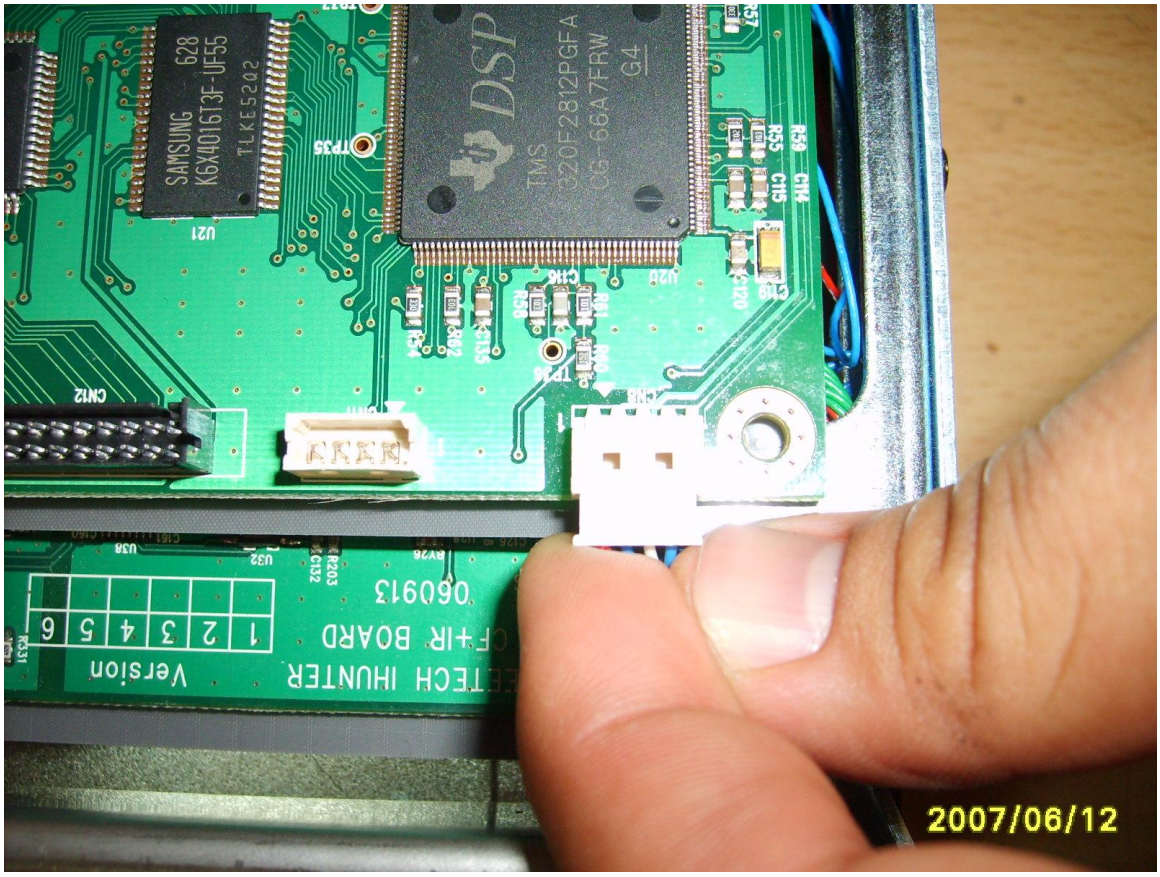
2007/06/12

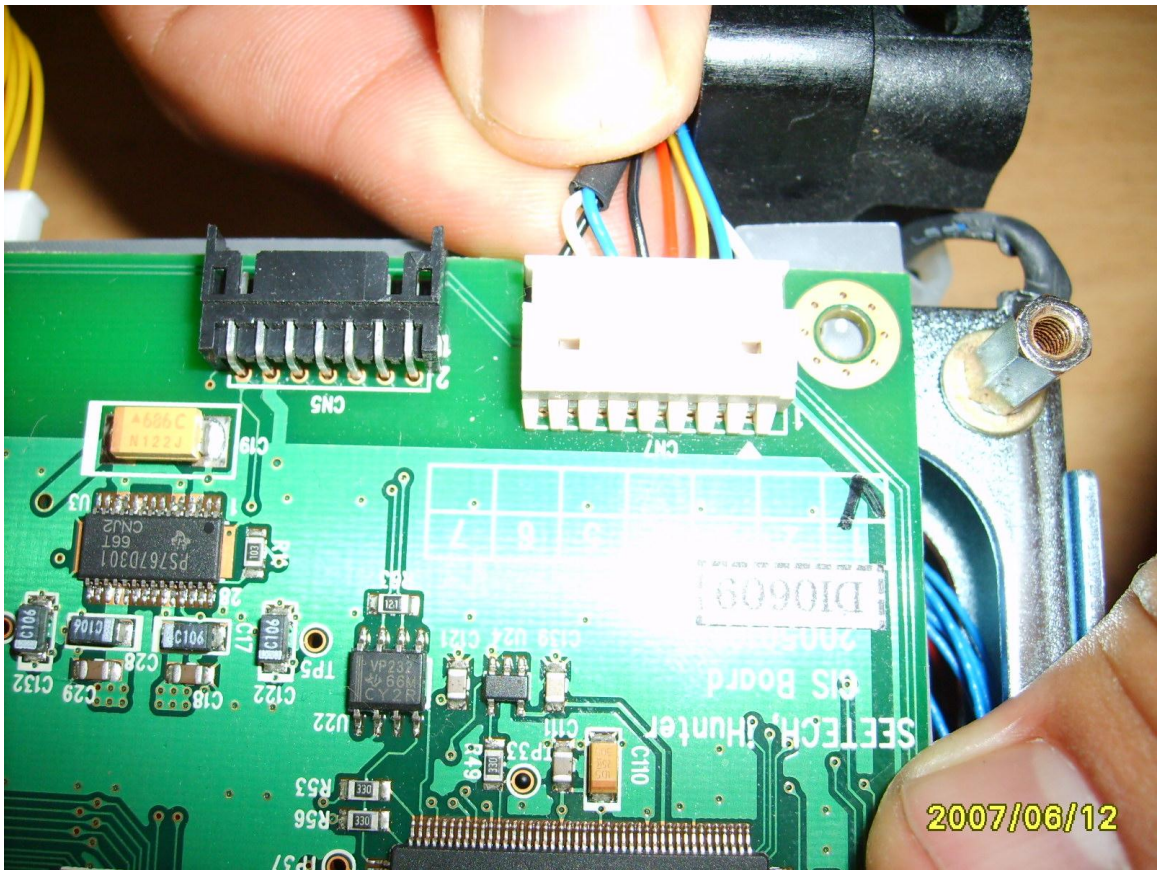
2007/06/12

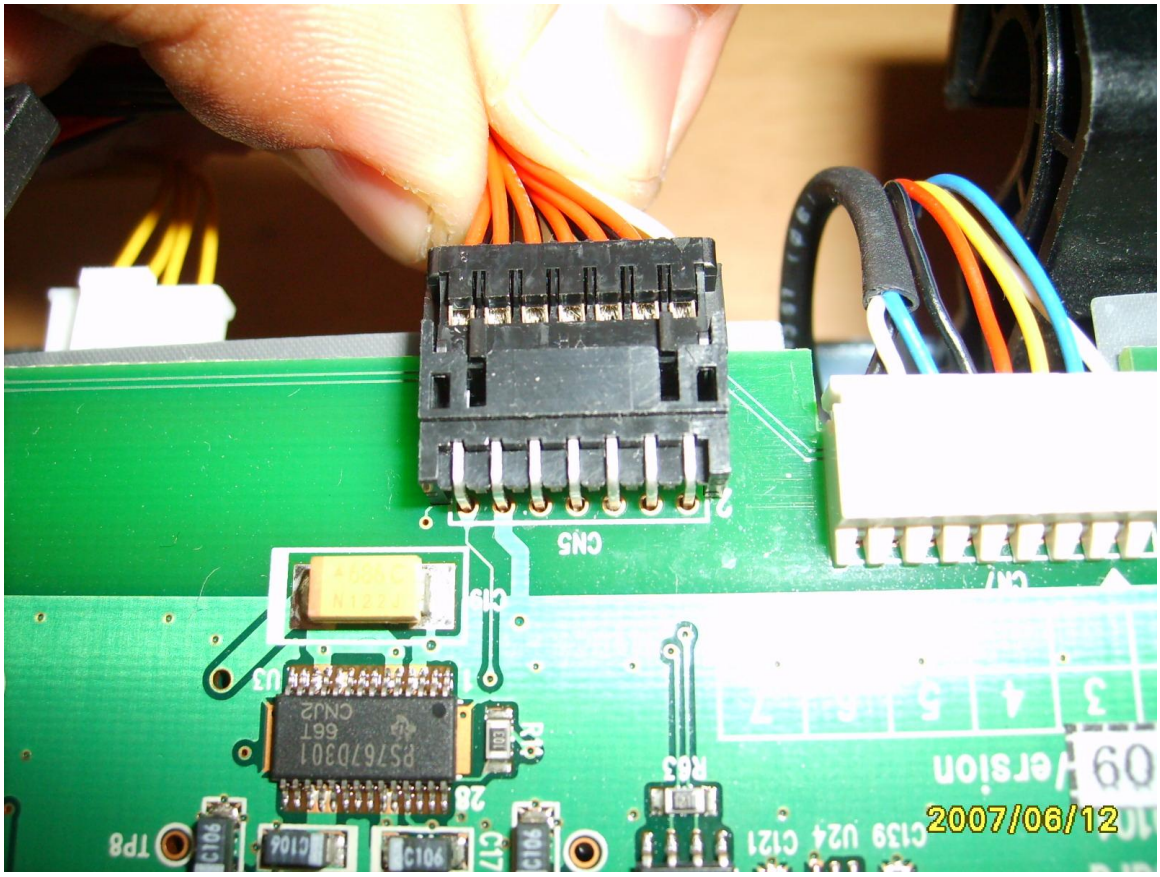
CN5
2007/06/12

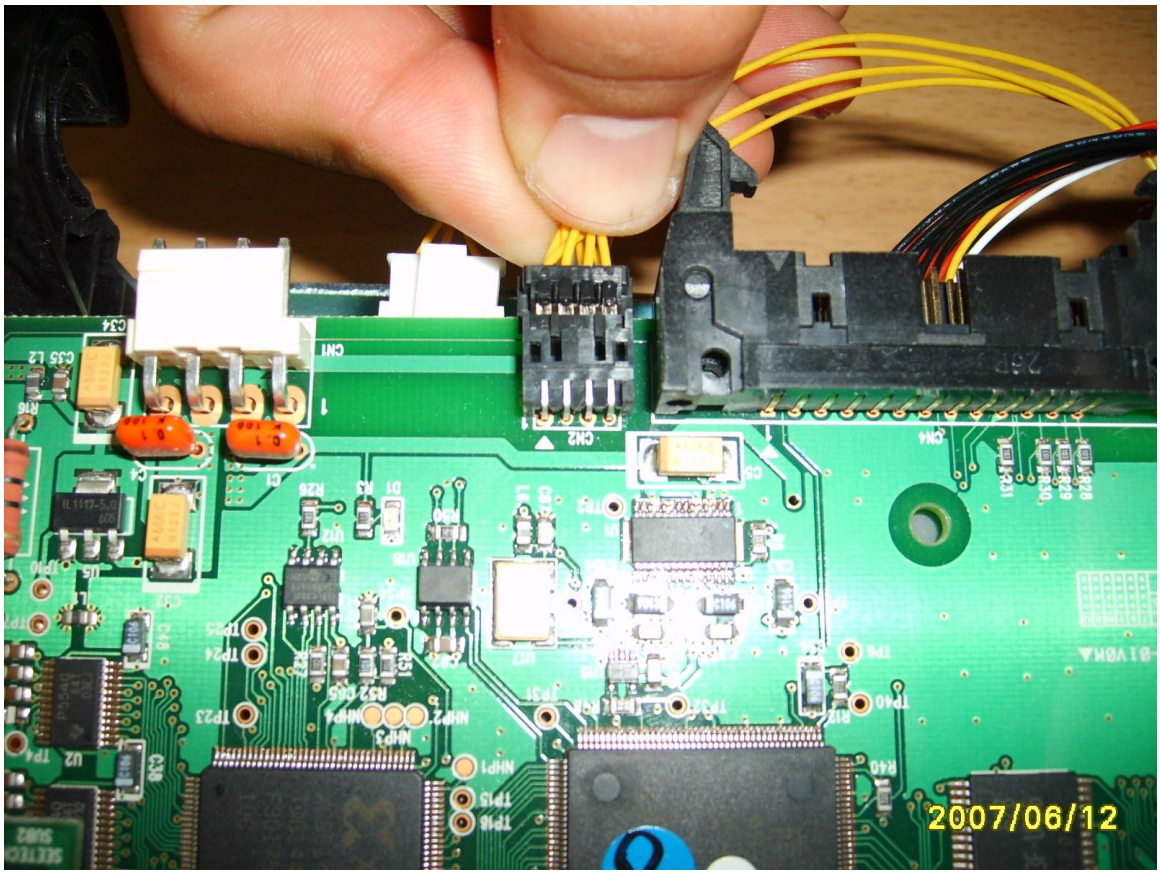
2007/06/12

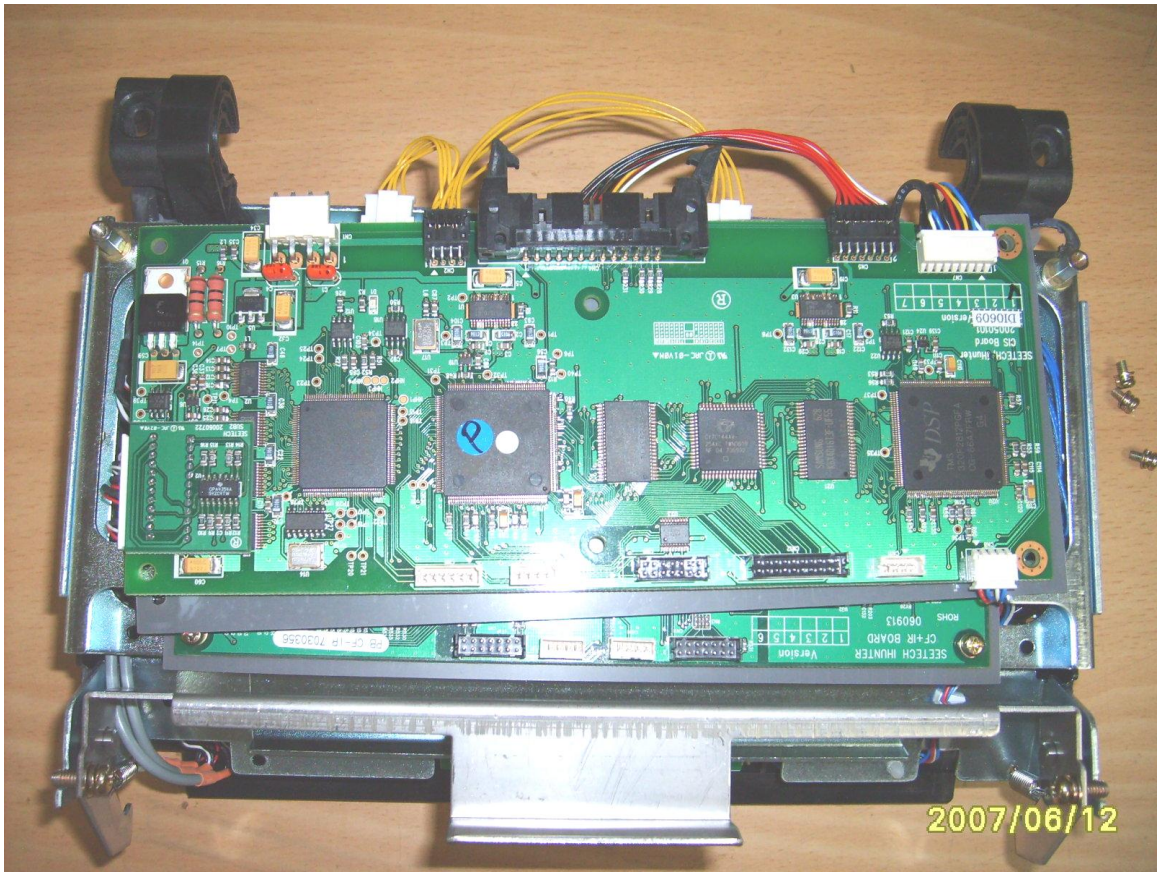

23. Tighten 4 screws to fix CIS main board to detector module.

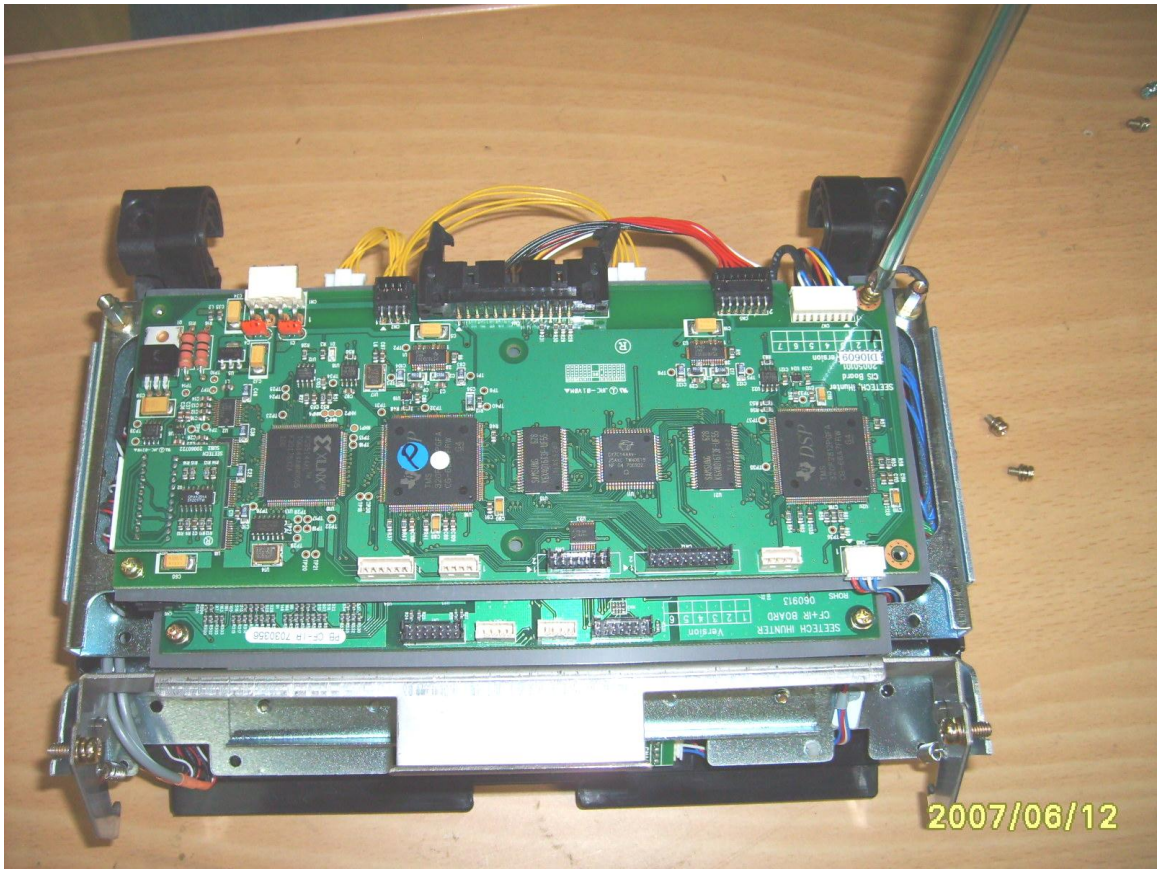

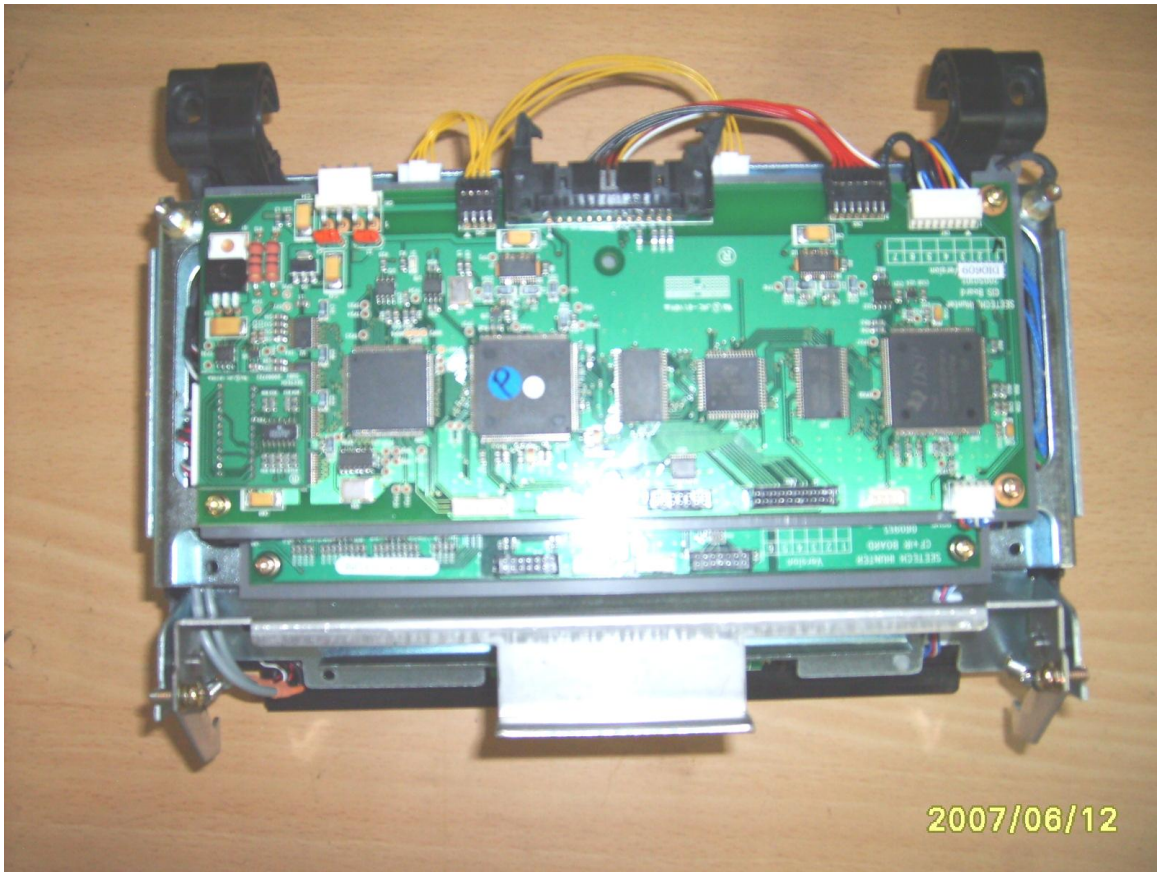

24. Assemble detector module to machine.

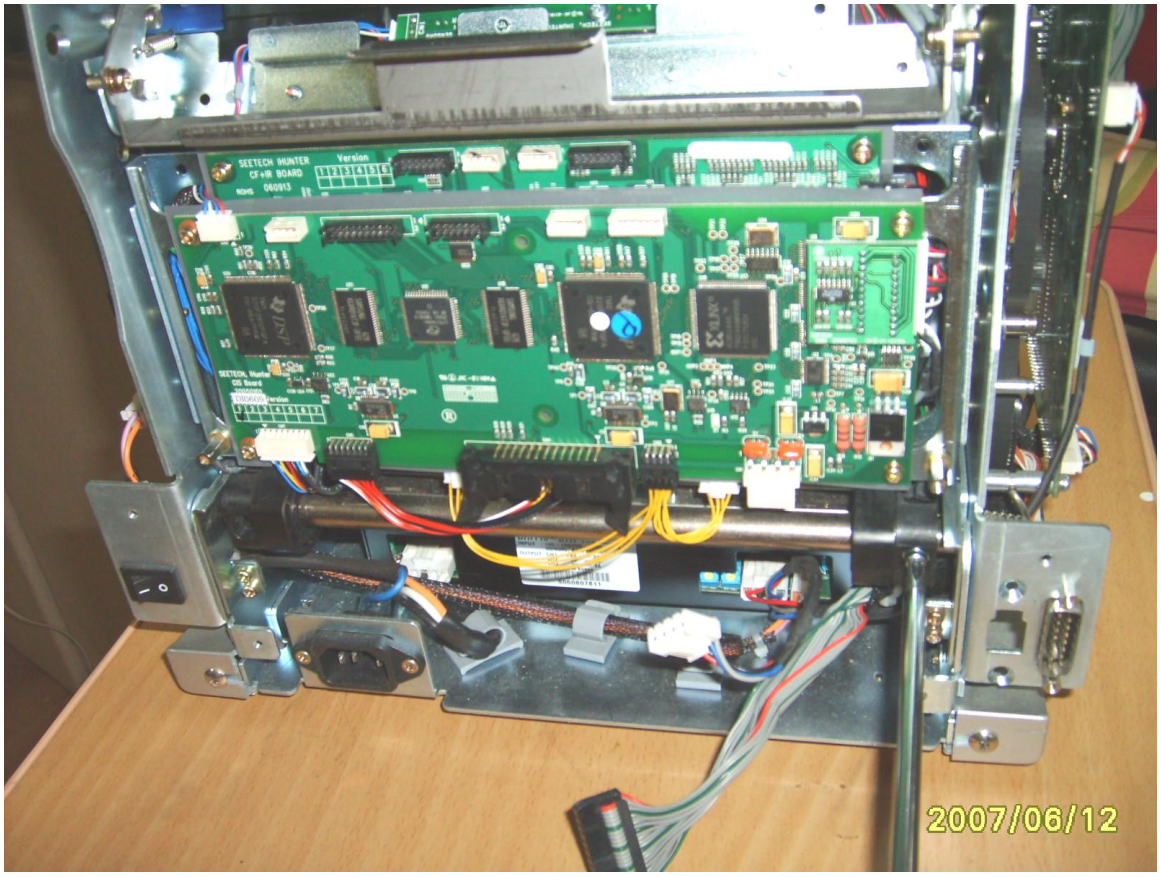

25. Connect CIS operation harness and power harness as below.

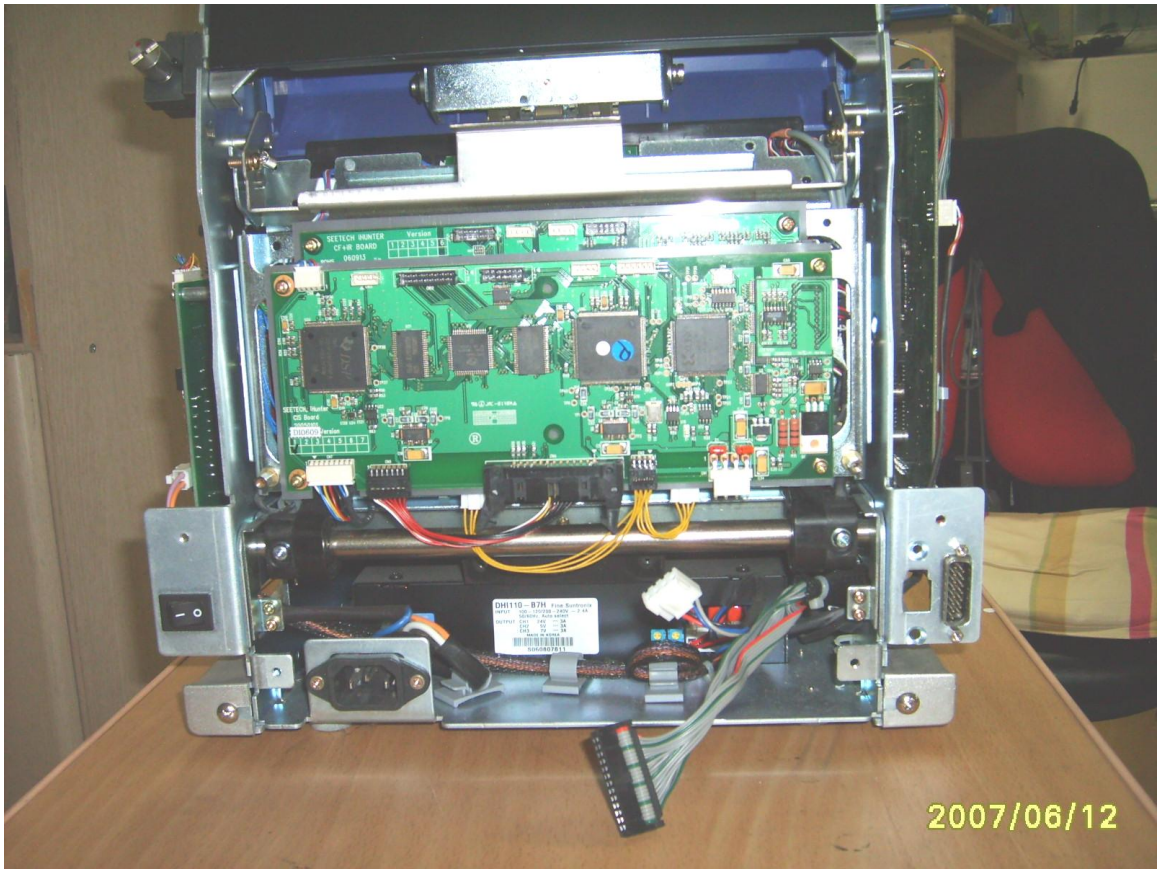

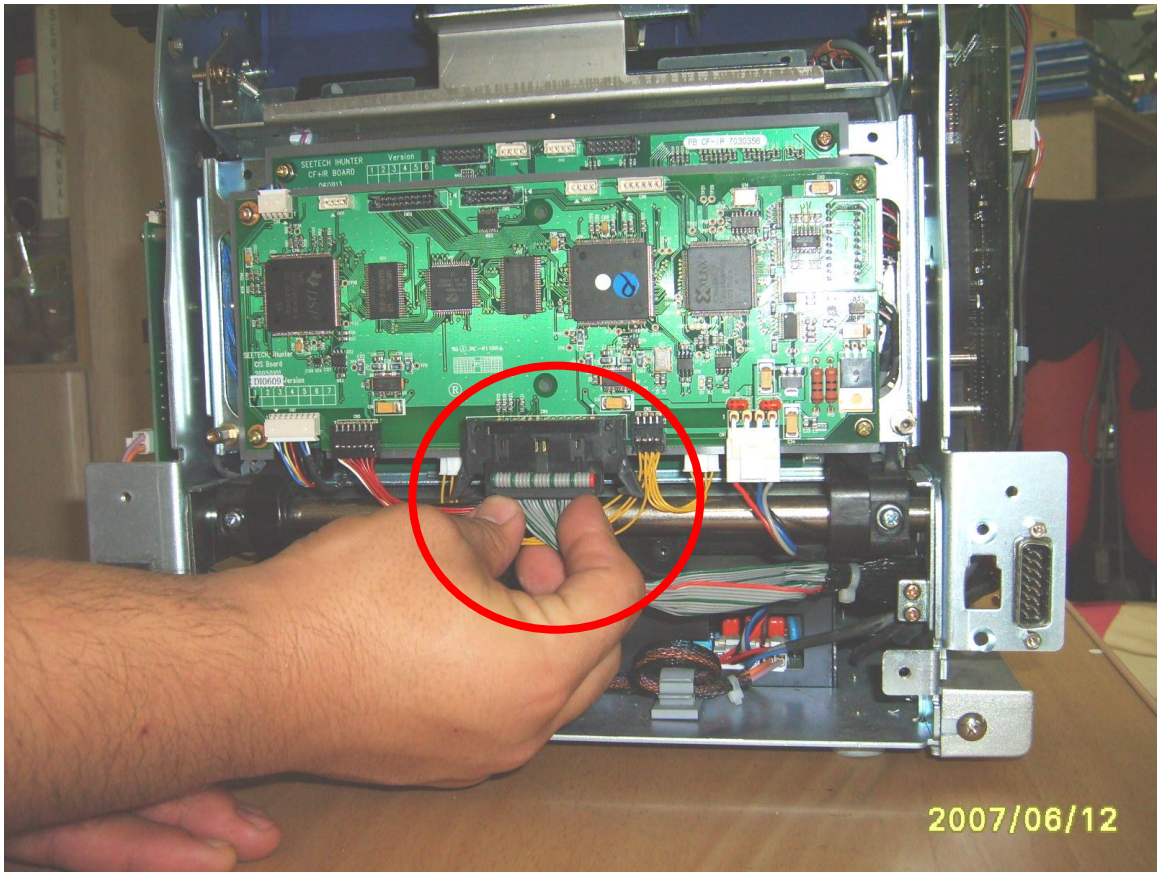
2007/06/12

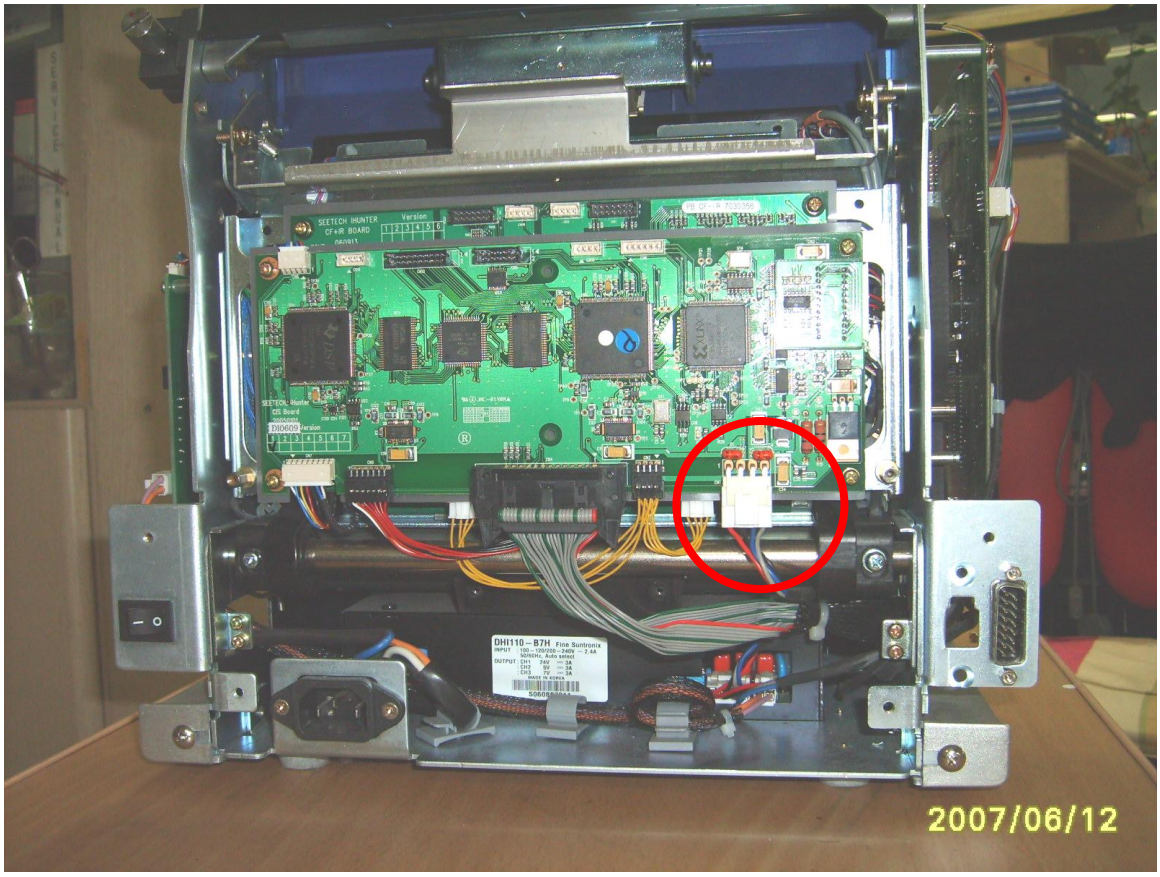
2007/06/12

7-28. HOW TO REPLACE CIS 1 MAIN BOARD TO CIS 2 MAIN BOARD

CIS 1 main board

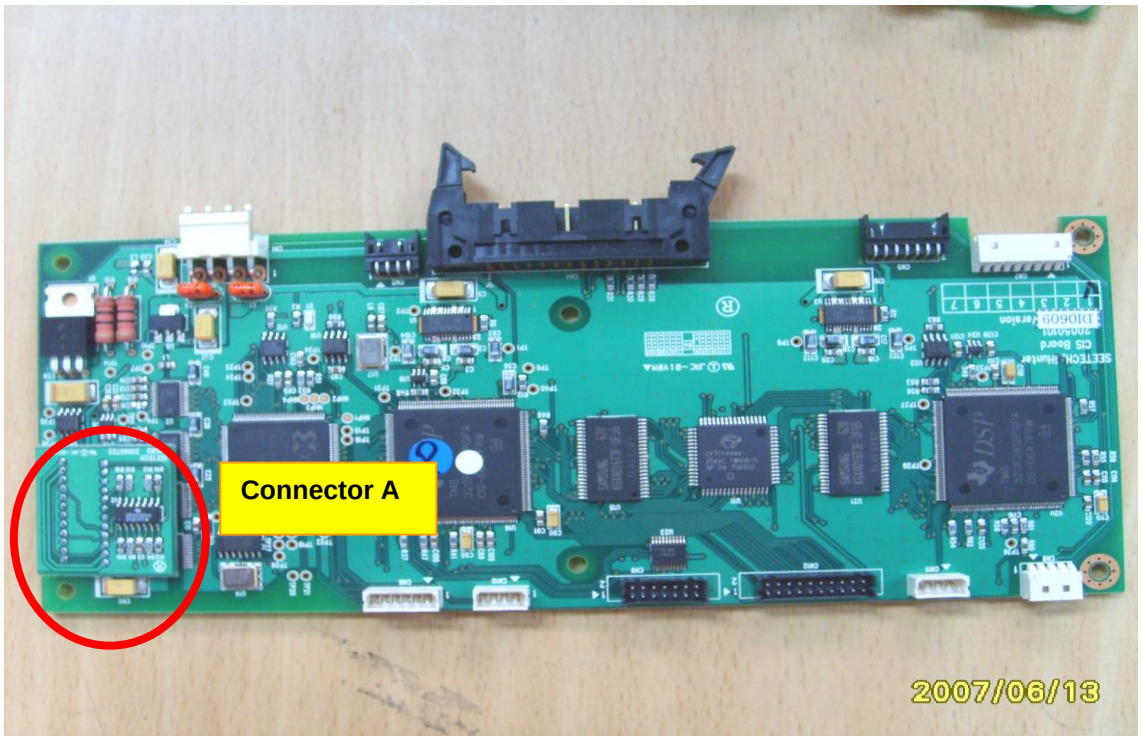

CIS 2 main board

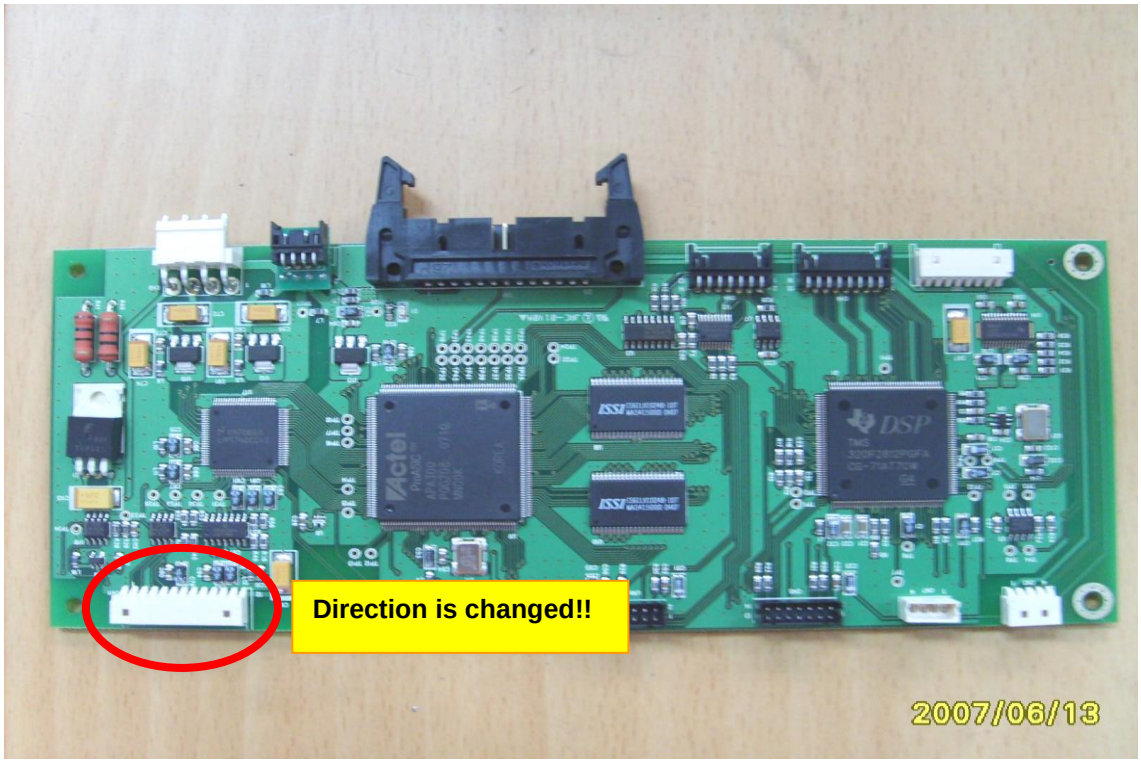

According to two pictures, direction of Connector A was changed.

Please notice.

1) Disassemble Detector Module from Machine.

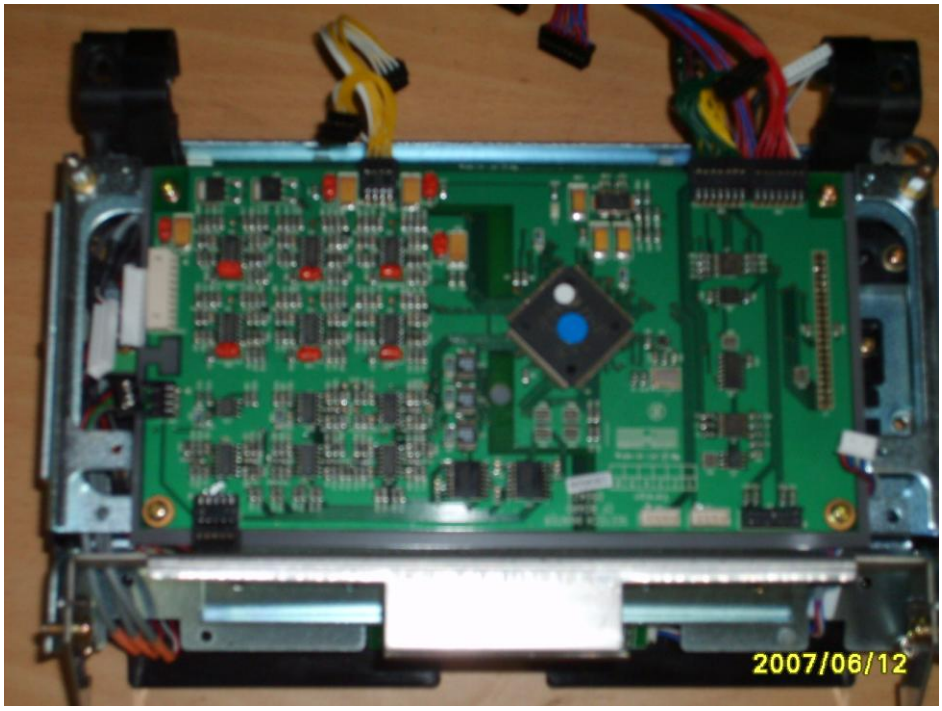

2) Disconnect all harnesses which are in CIS 1 main board.

3) Remove 4 screws from CIS 1 main board.

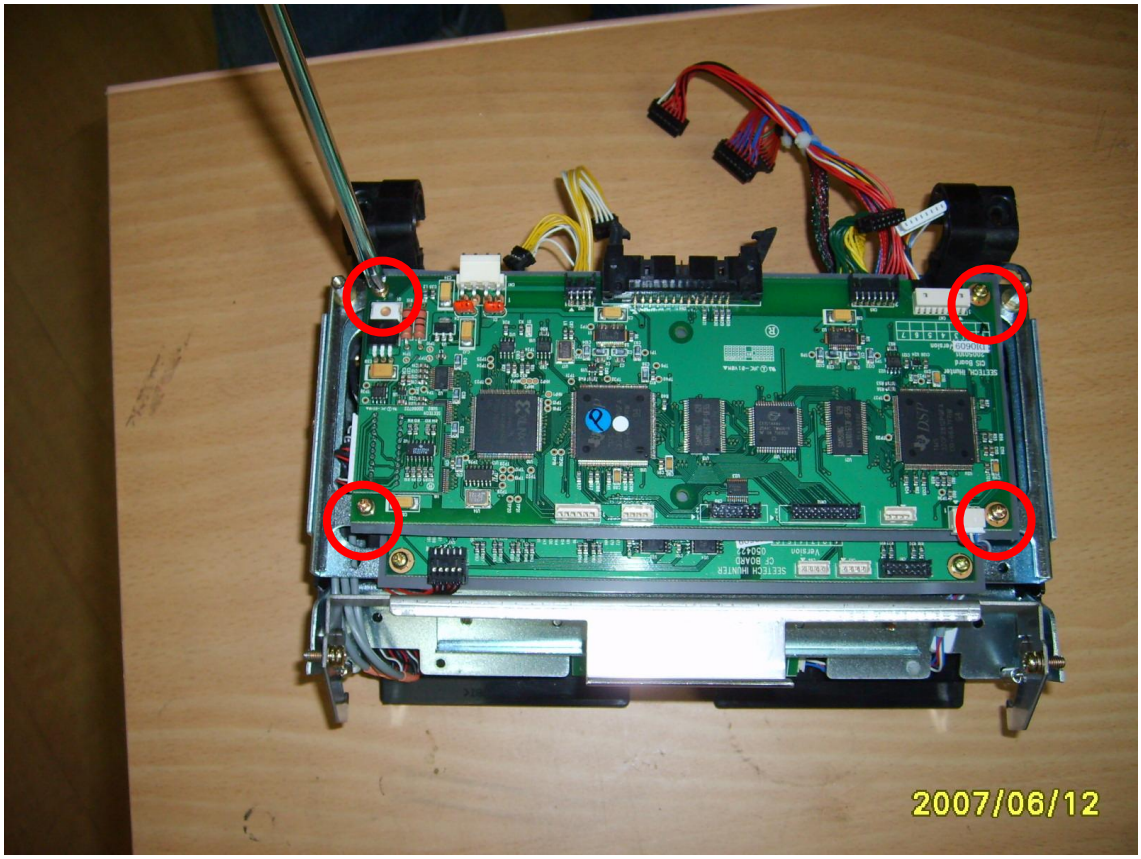

4) Remove CIS 1 main board from Detector Module.

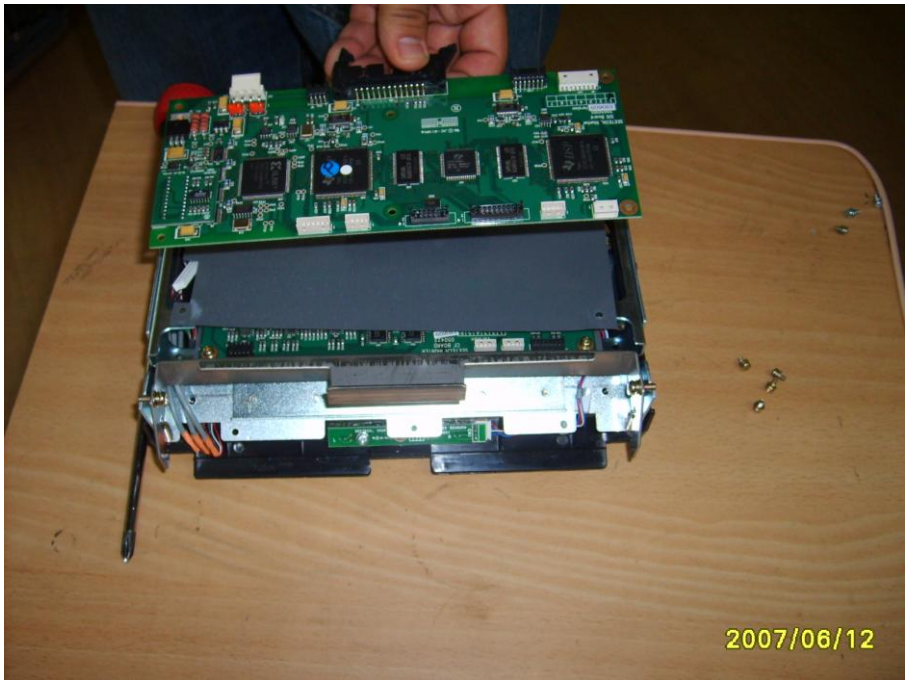

5) CF main board appears as below.

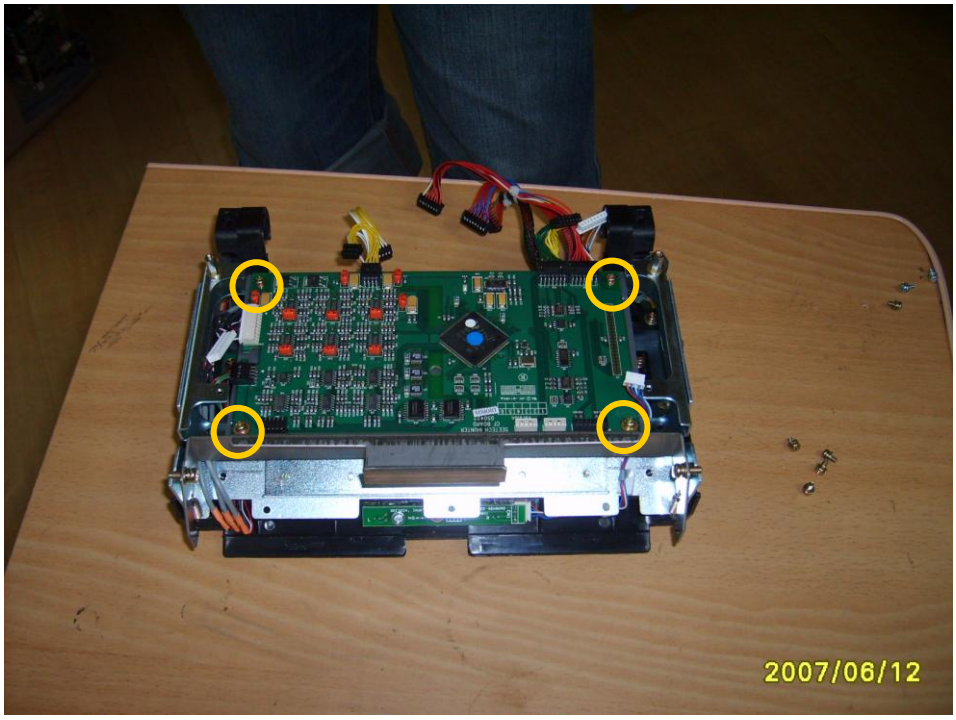

6) Remove 4 screw from CF main board.

7) Find Harness A which you disconnected from CIS 1 main board, connector A.

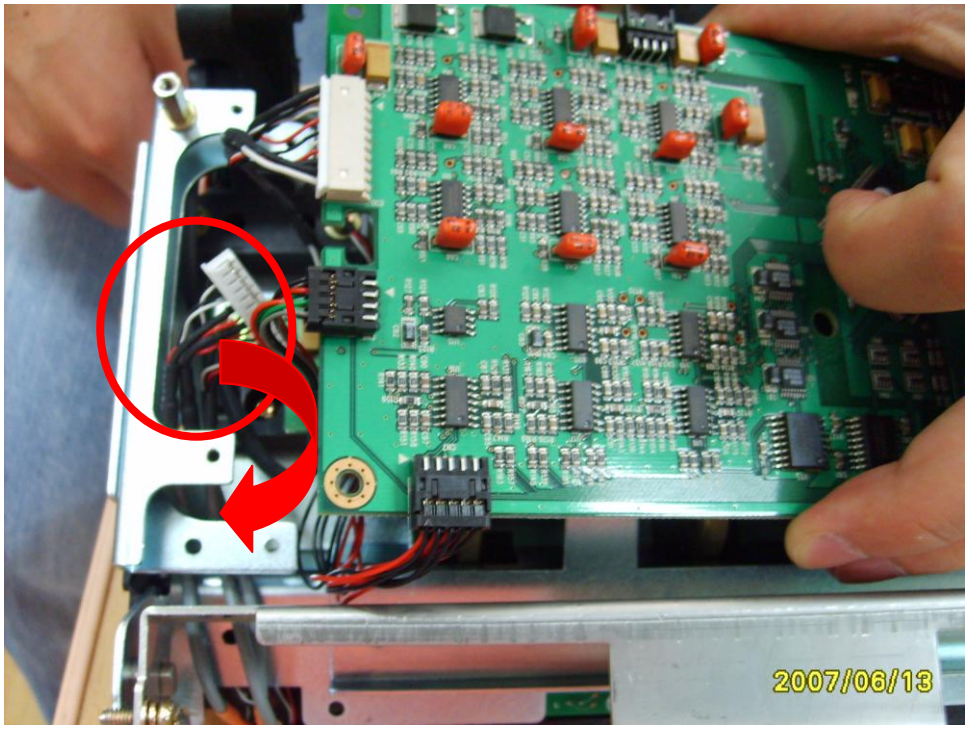

8) Change harness position as below.

As I informed at first, Connector A position was changed, harness position should be changed too.

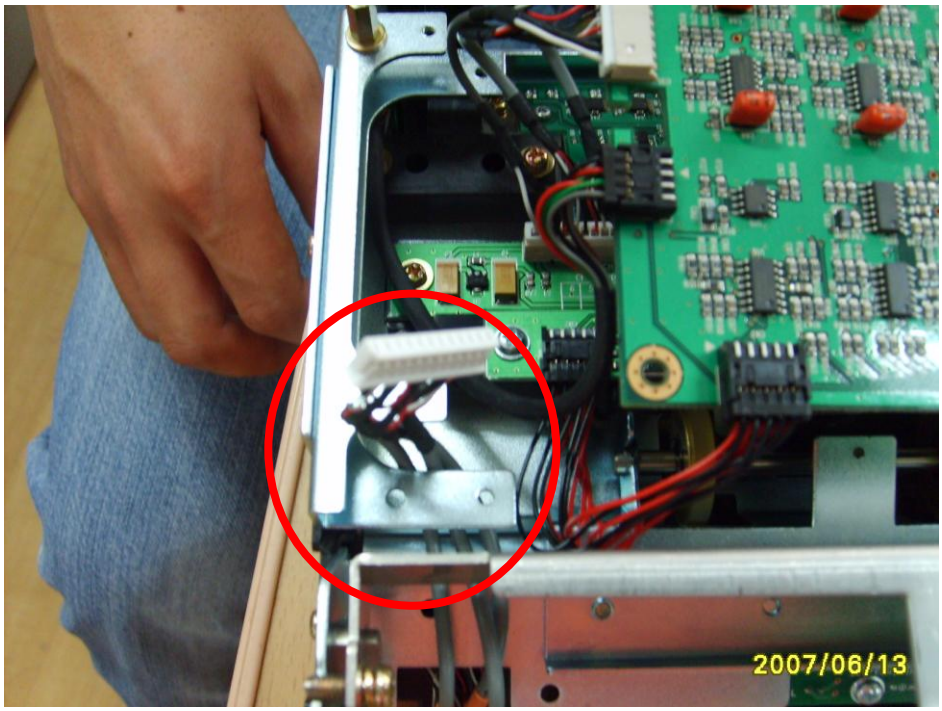

9) Tighten 4 screws to fix CF main board to Detector Module.

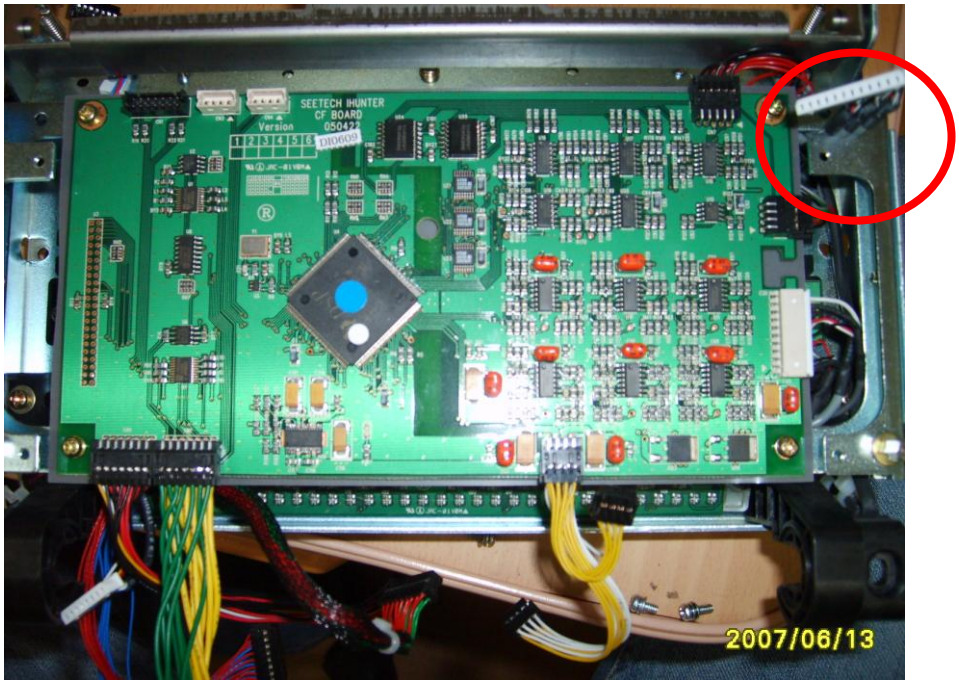

10) Connect all harnesses to CIS 2 main board.

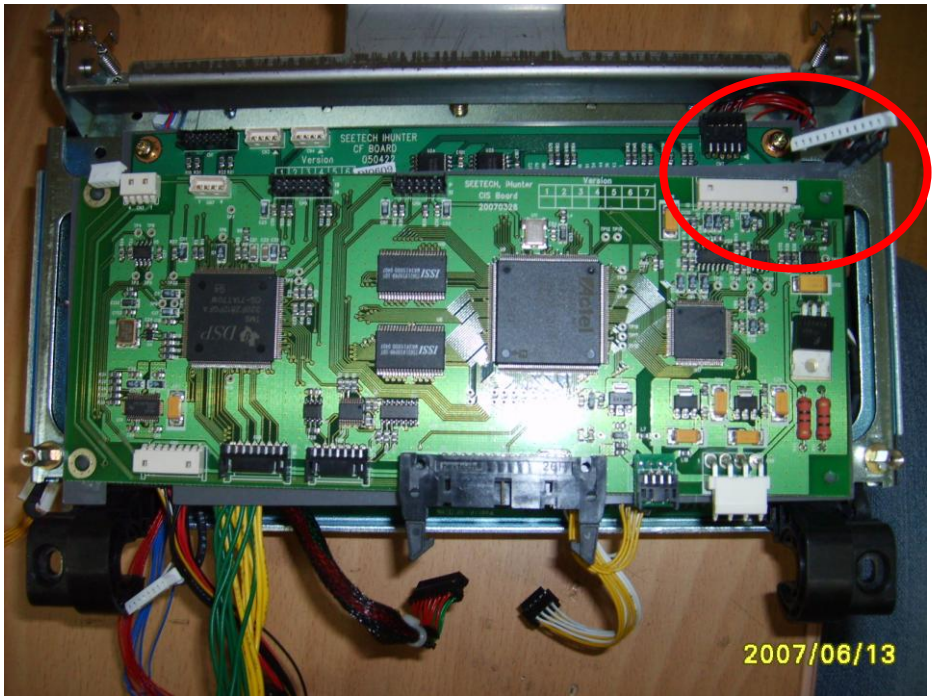

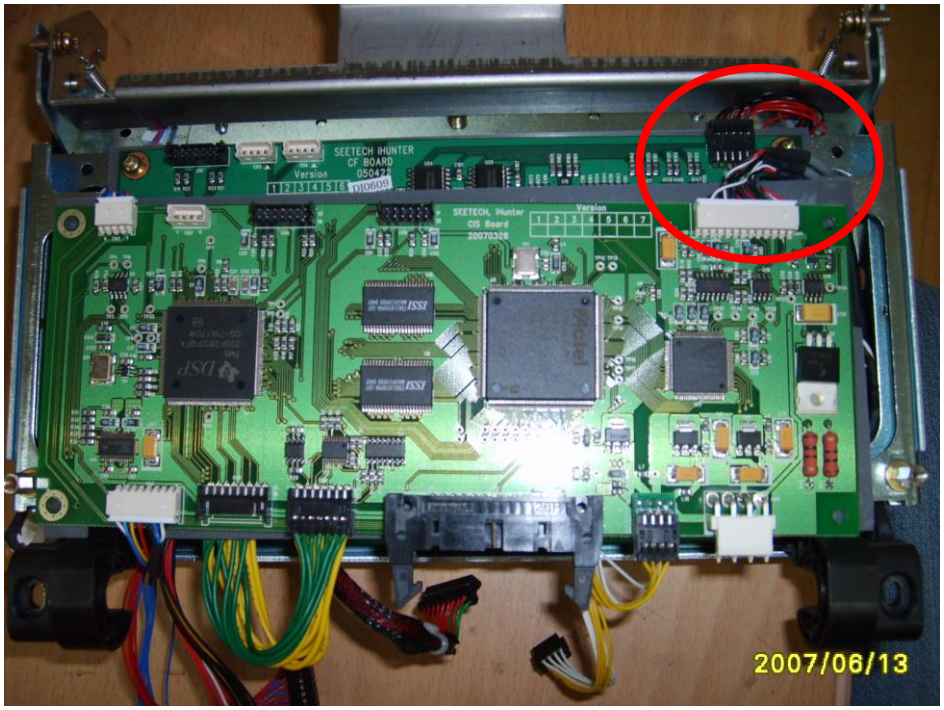

11) Tighten 4 screws to CIS 2 main board.

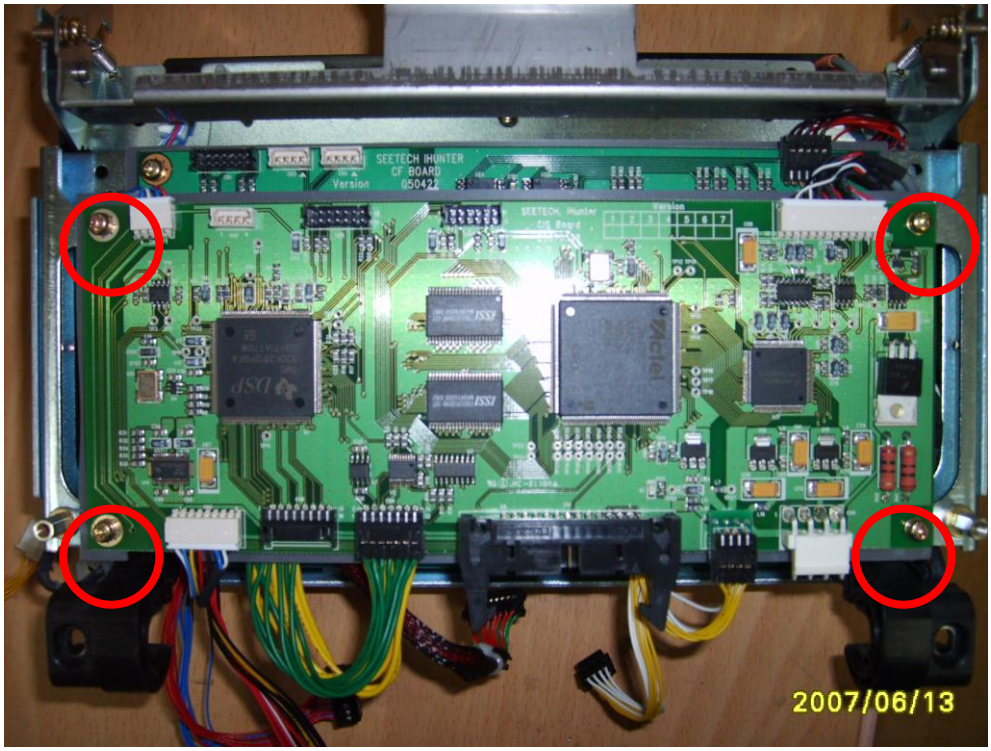

12) Assemble Detector Module to machine.

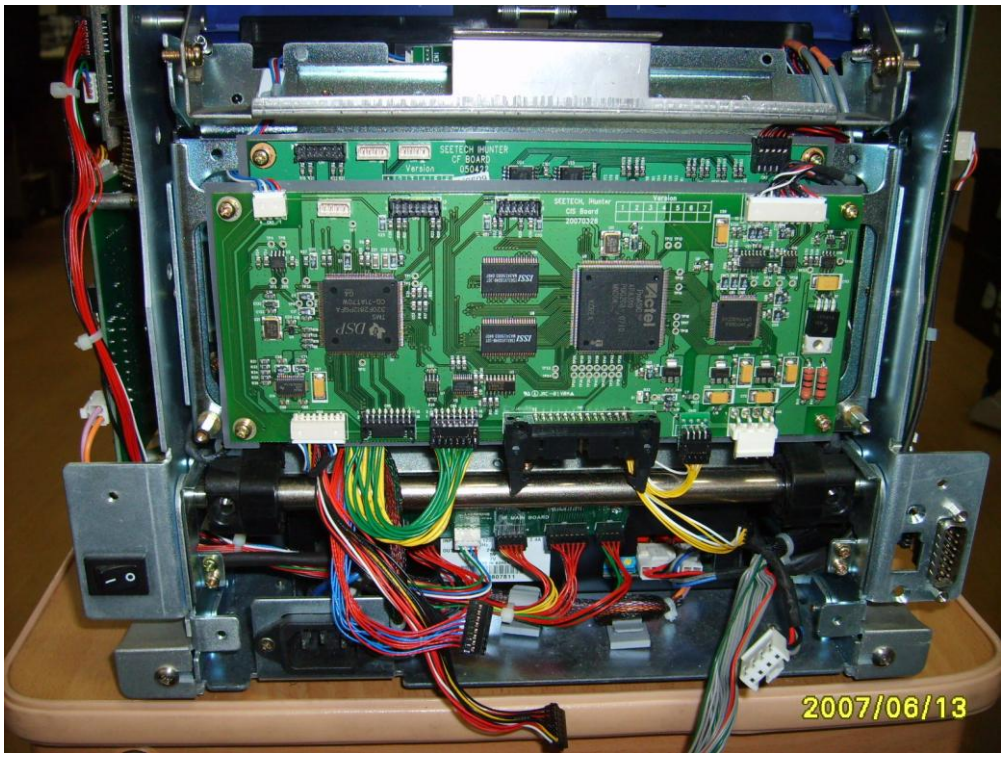

13) Connect 4 harnesses to IR connector Board.

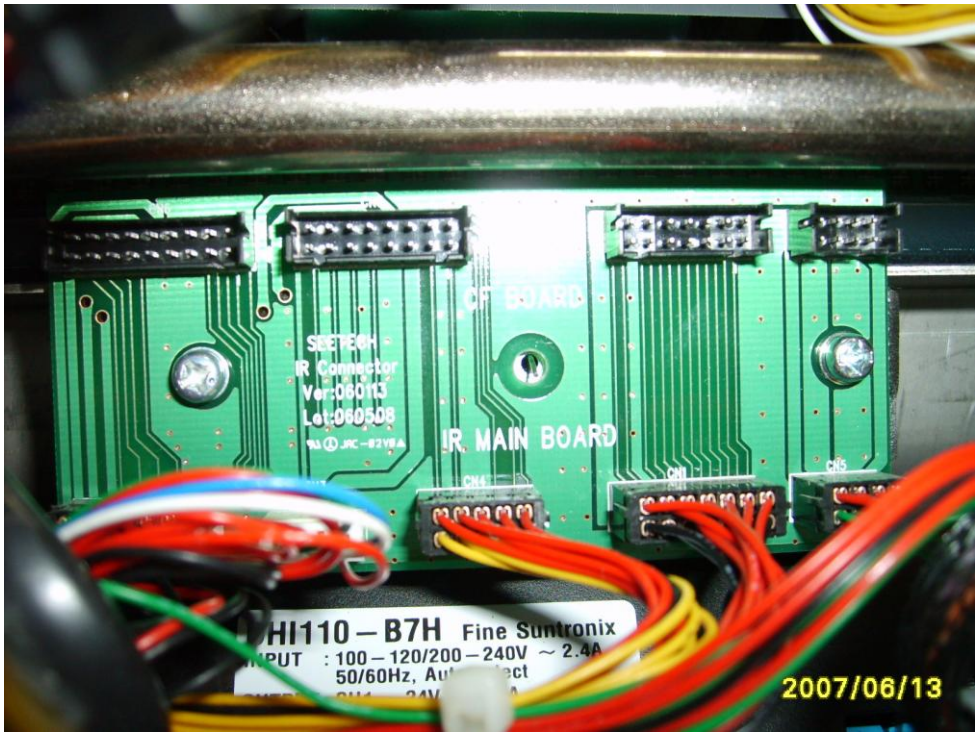

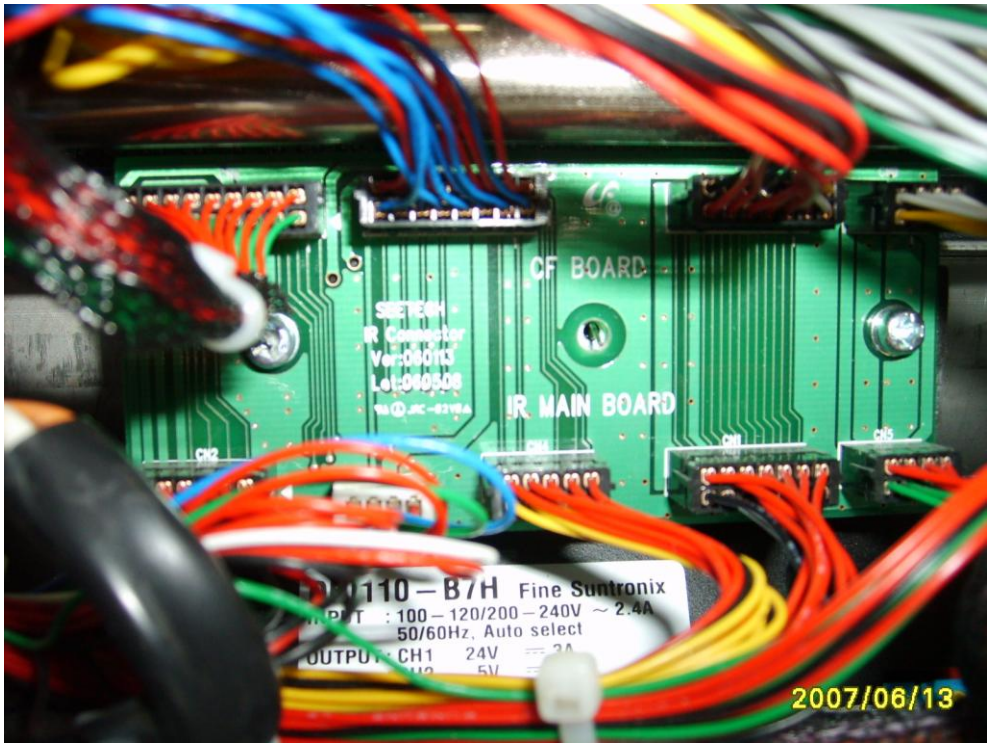

2007/06/13

7-29. HOW TO REPLACE CIS 1 MAIN BOARD TO CIS 2 MAIN BOARD WITH CF-IR MAIN BOARD

CIS 1 main board

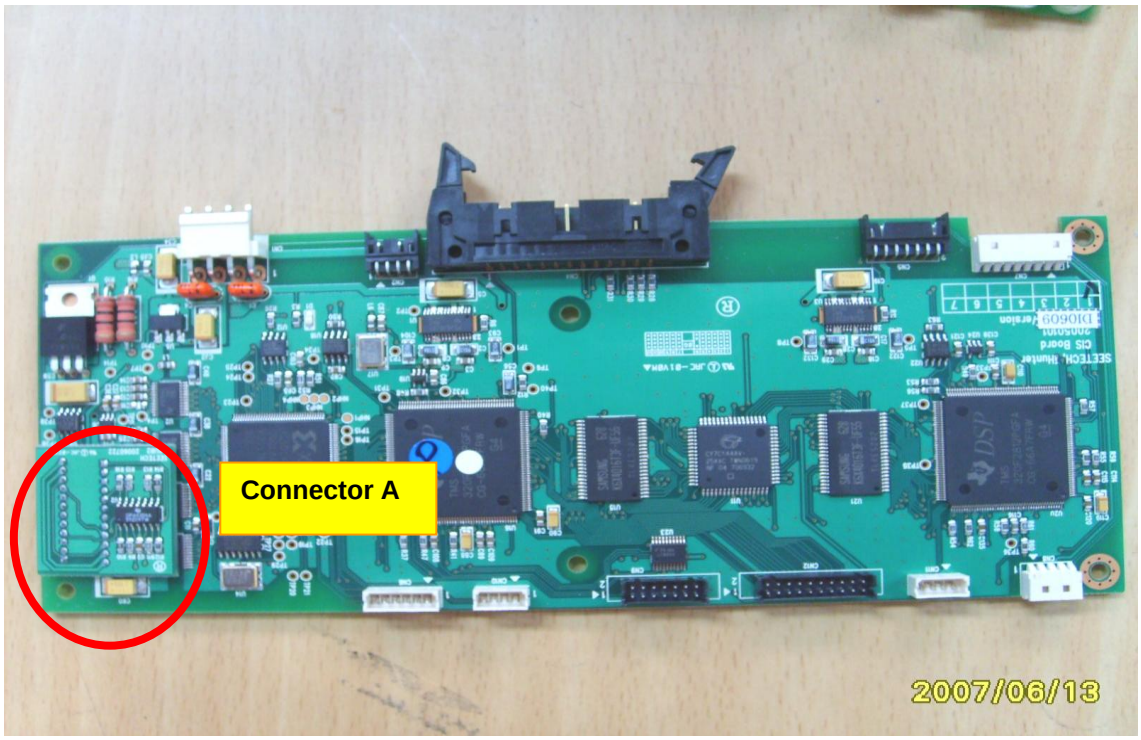

CIS 2 main board

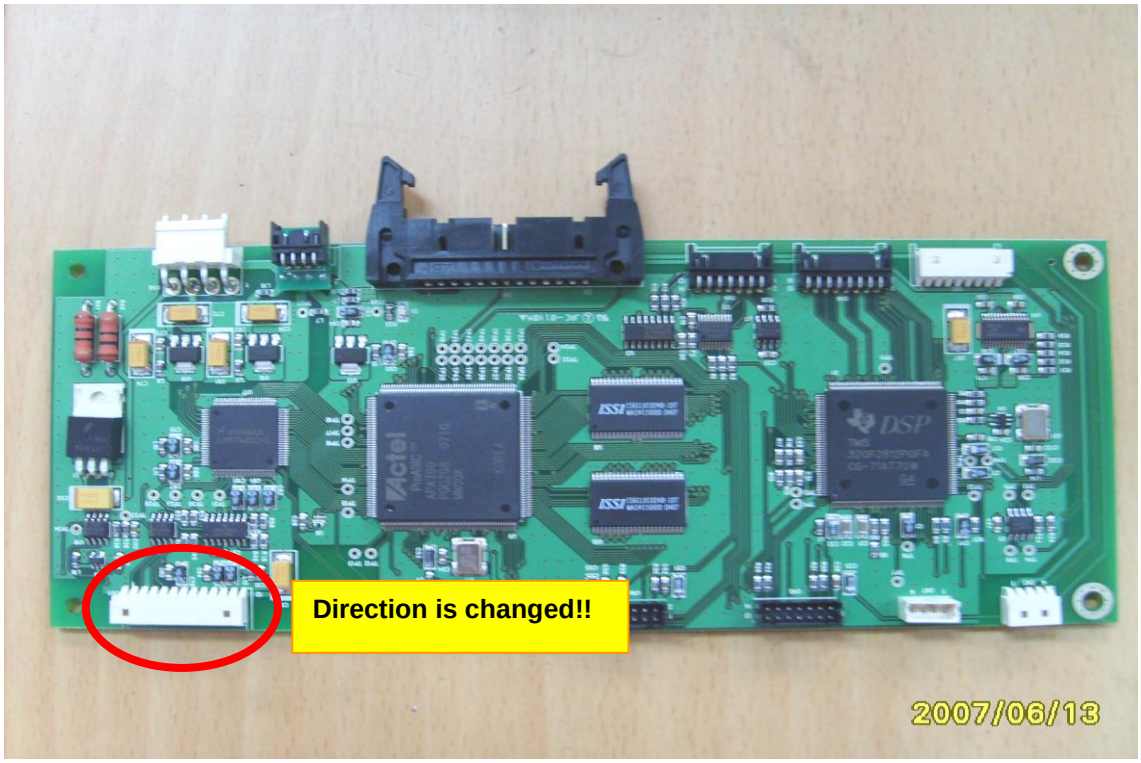

According to two pictures, direction of Connector A was changed.

Please notice.

1) Disassemble Detector Module from Machine.

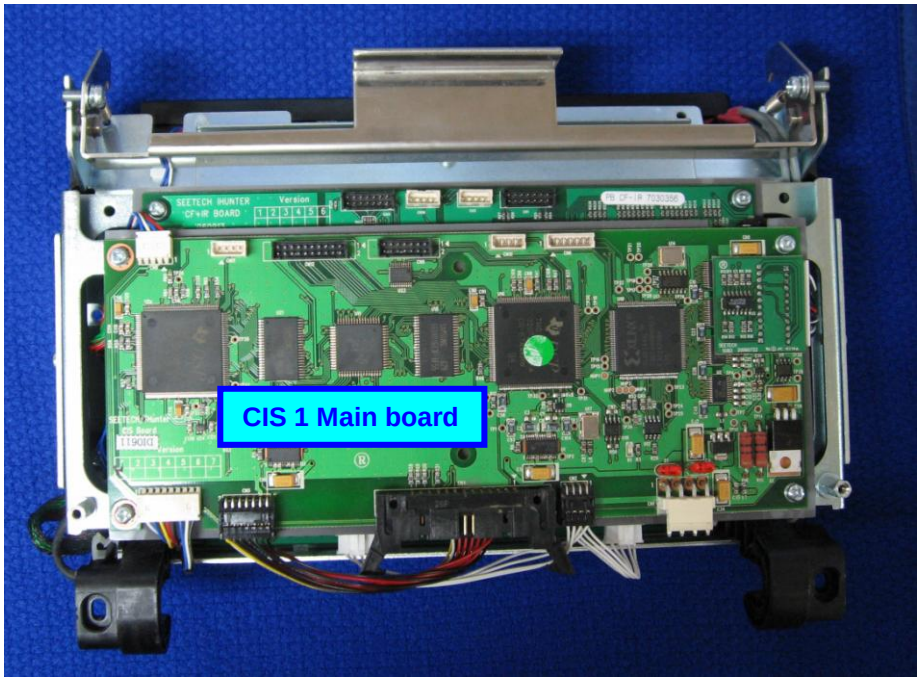

2) Disconnect all harnesses which are in CIS 1 main board.

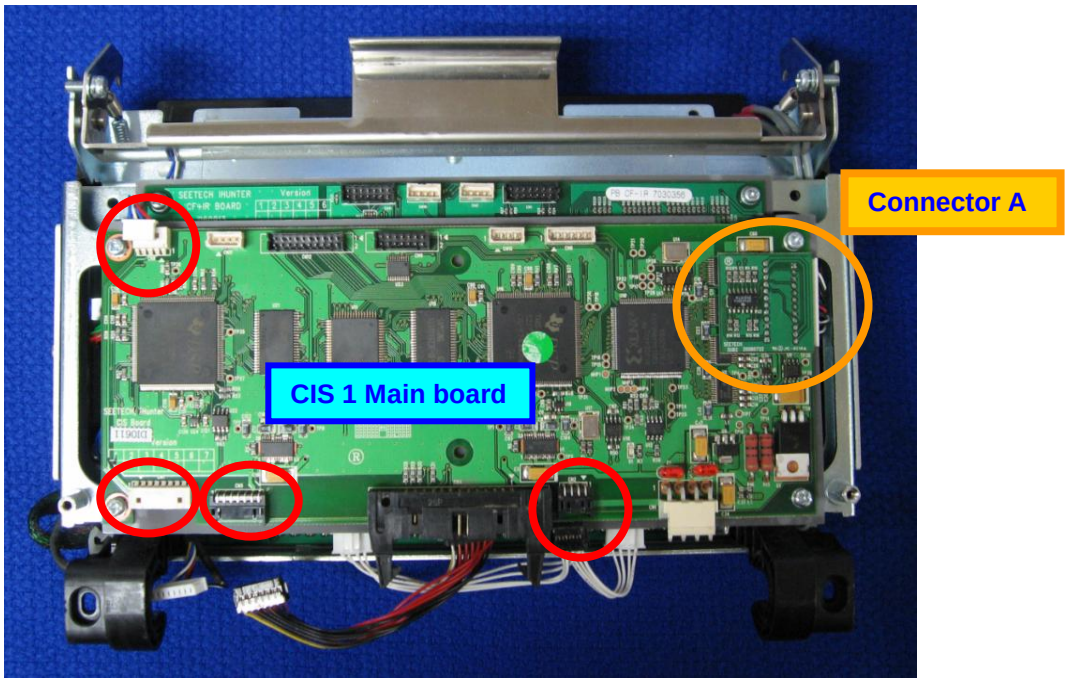

3) Remove 4 screws from CIS 1 main board.

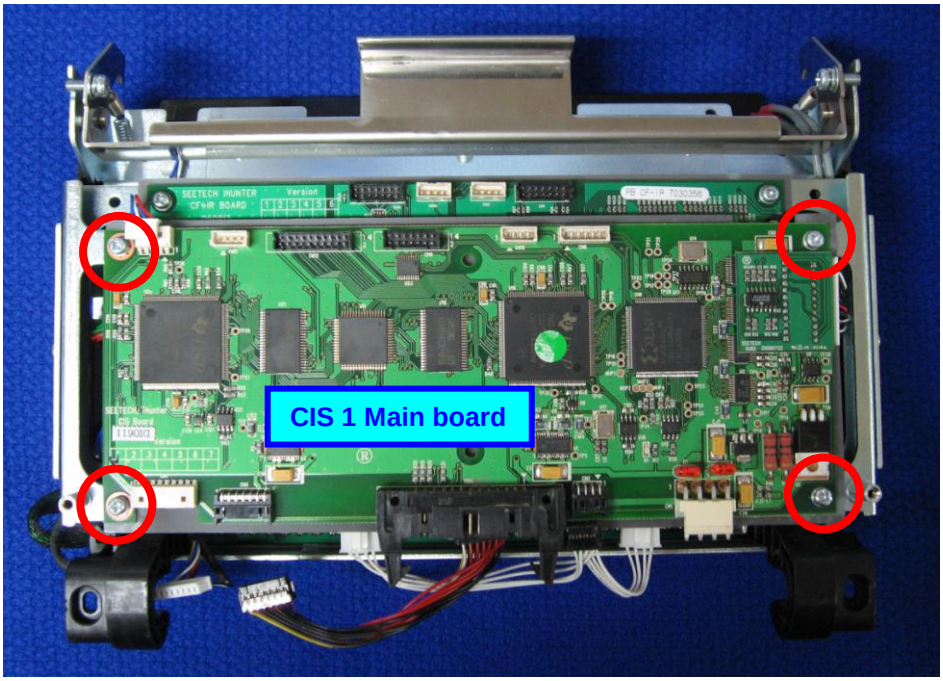

4) Remove CIS 1 main board from Detector Module.

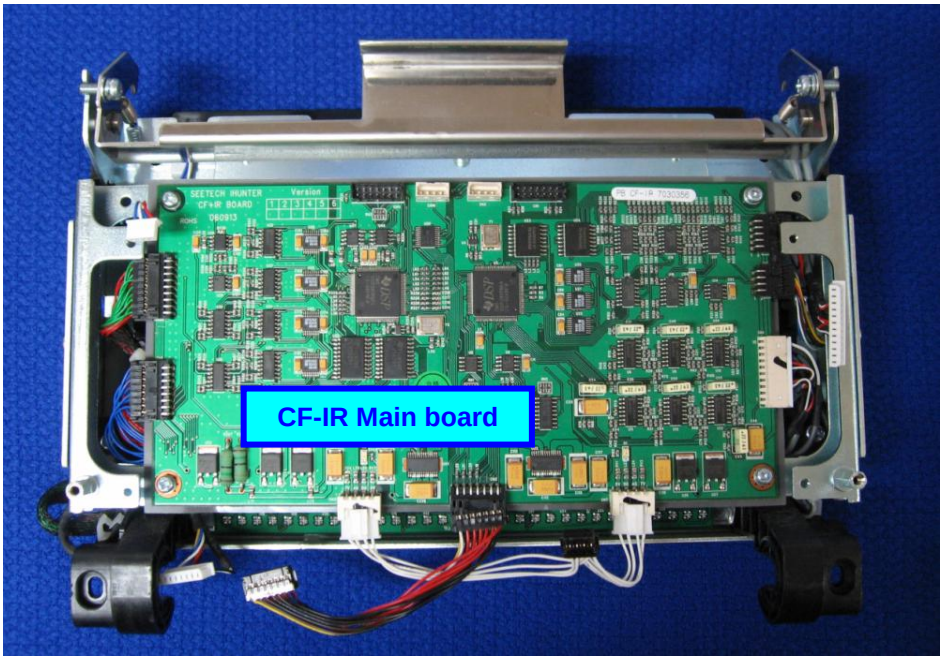

5) CF main board appears as below.

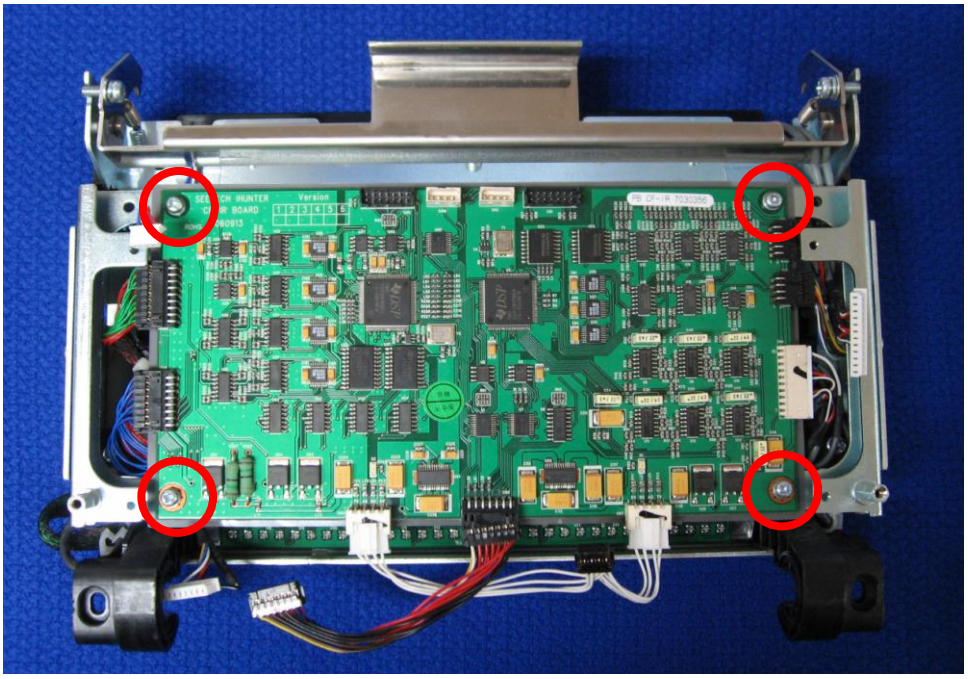

6) Remove 4 screw from CF main board.

7) Find Harness A which you disconnected from CIS 1 main board, connector A.

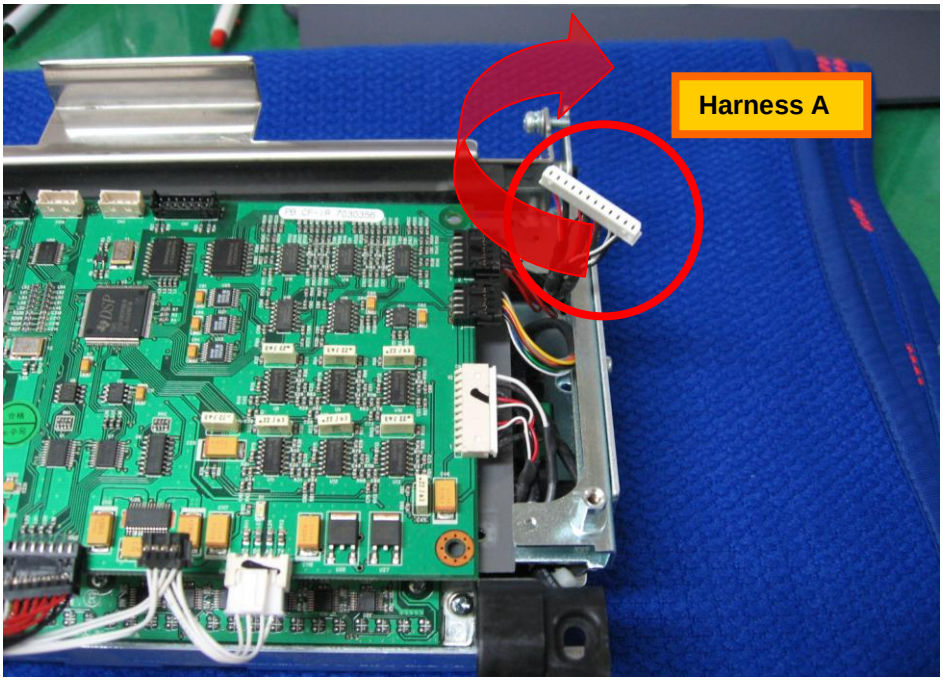

8) Change harness position as below.

As I informed at first, Connector A position was changed, harness position should be changed too.

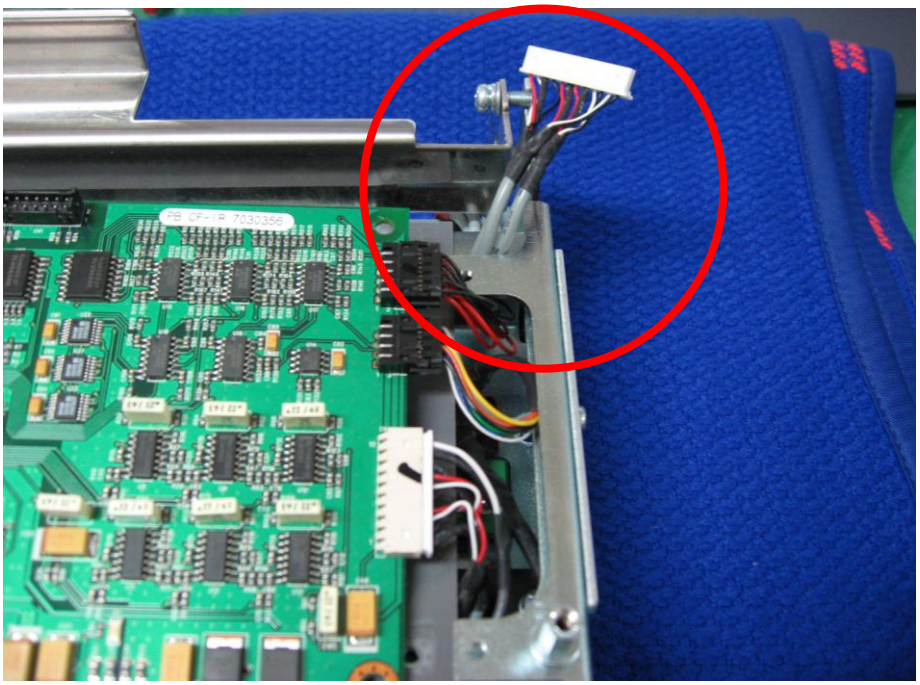

9) Tighten 4 screws to fix CF main board to Detector Module.

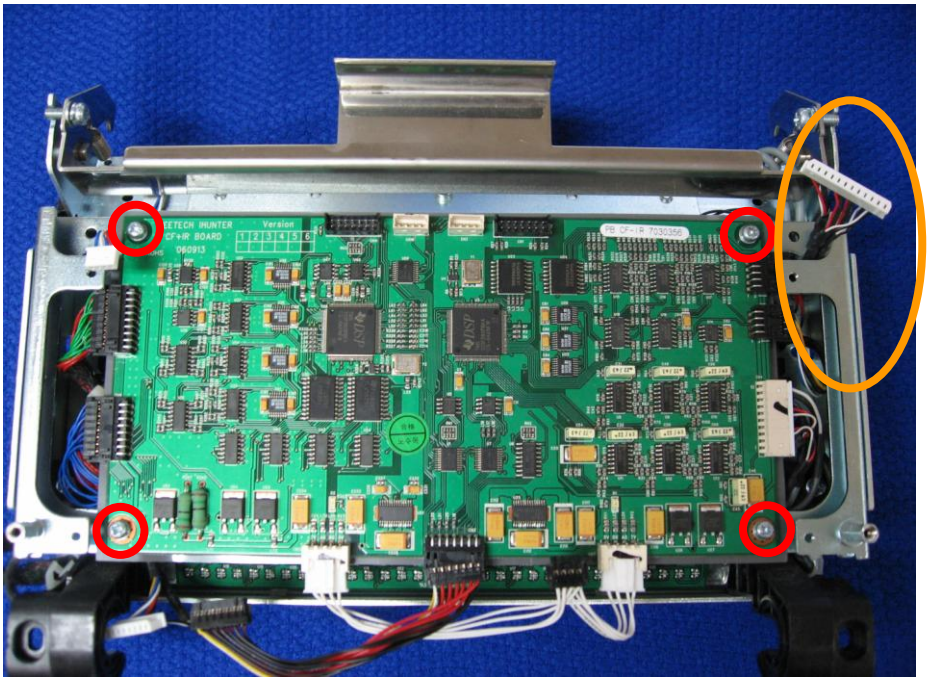

10) Put CIS 2 main board and connect Harness A to CIS 2 main board.

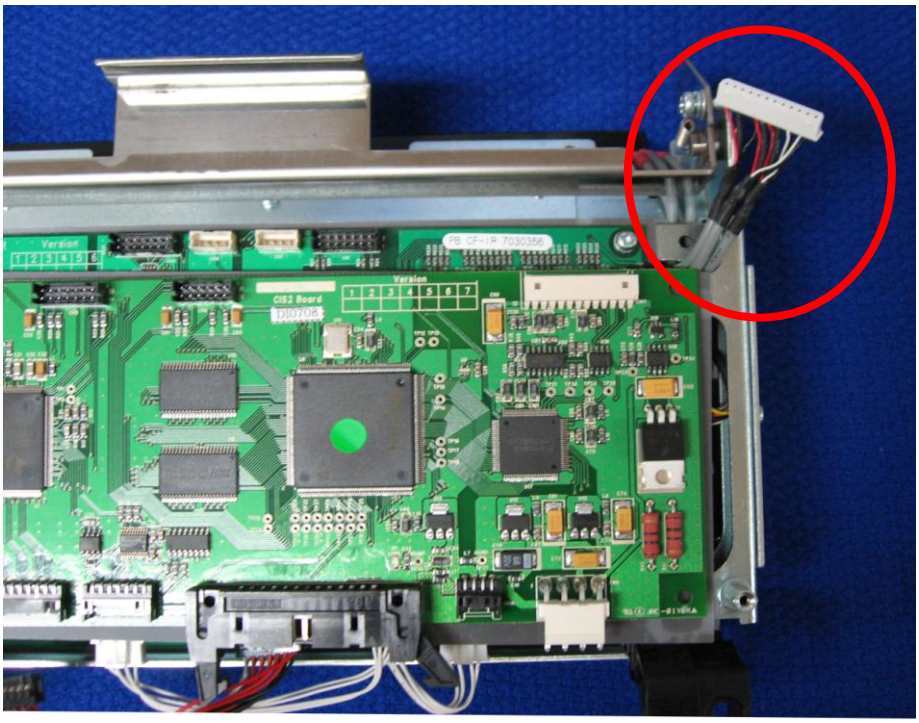

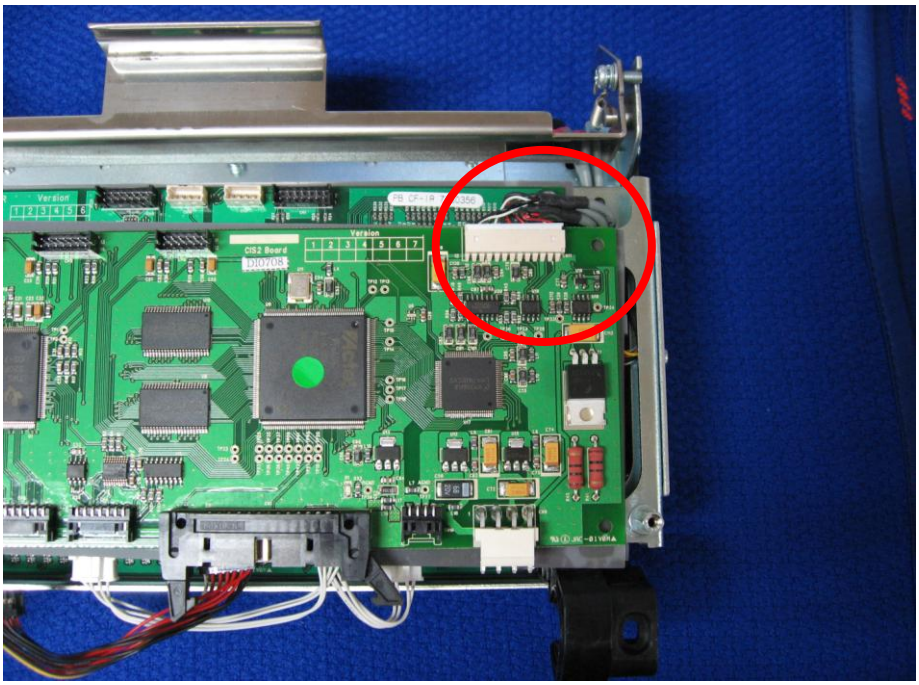

11) Connect all harness to CIS 2 main board and tighten 4 screws.

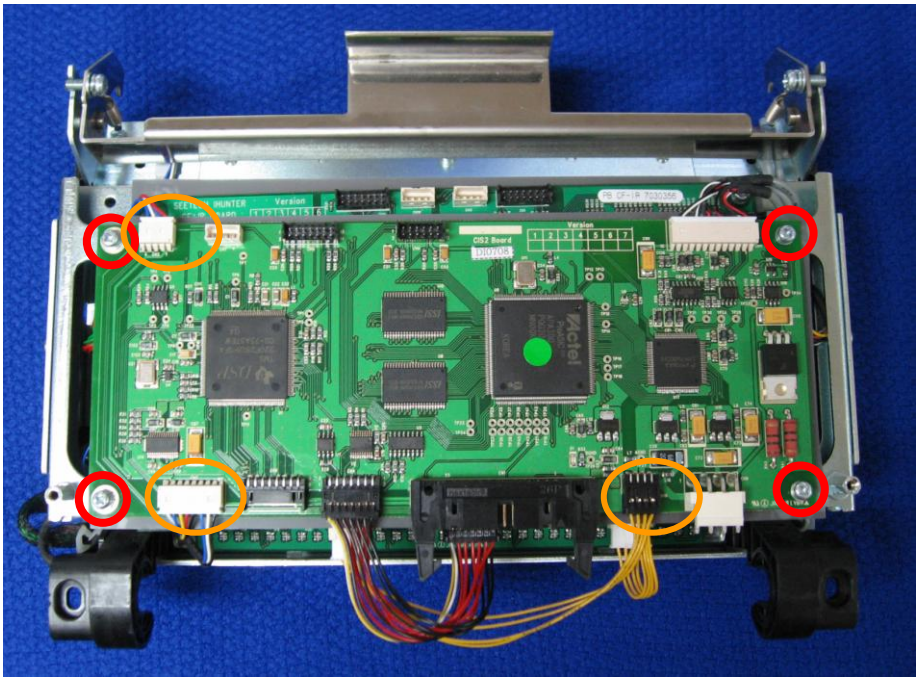

12) Assemble Detector Module to machine.

7-30. HOW TO REPLACE CIS 1/CIS 2/CIS 4 MAIN BOARD AND CF-IR MAIN BOARD TO CDM BOARD

*** Feature of CDM Board**

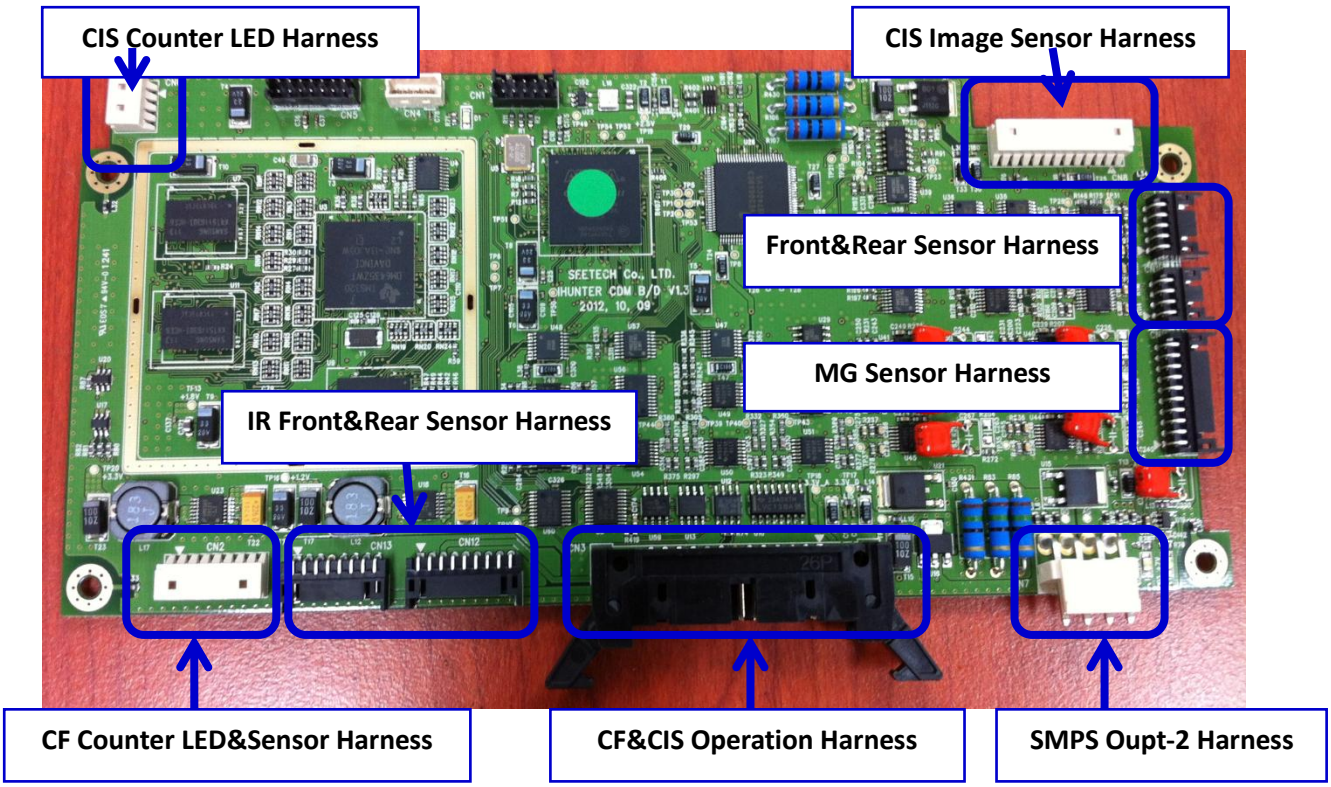

CIS 2 Main Board and CF-IR Main Board are replaced with CDM Board.

CIS2&CF Signal Harness and CIS&CF/IR Power Harness are not used.

*** Before replacing CDM Board**

Check the machine has Center MG Sensor or Side MG Sensor first.

When open Detector Module, you can check MG Sensor Type.

<Side MG>

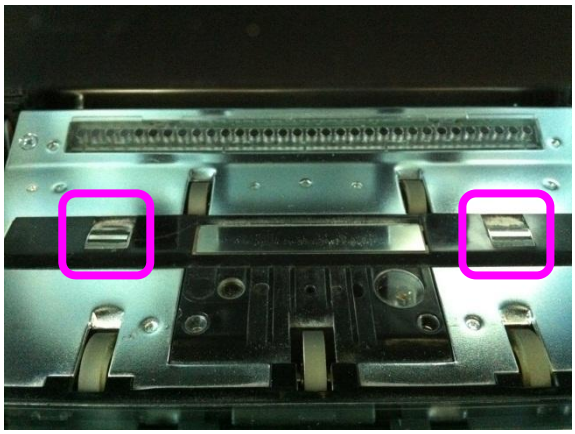

<Center MG>

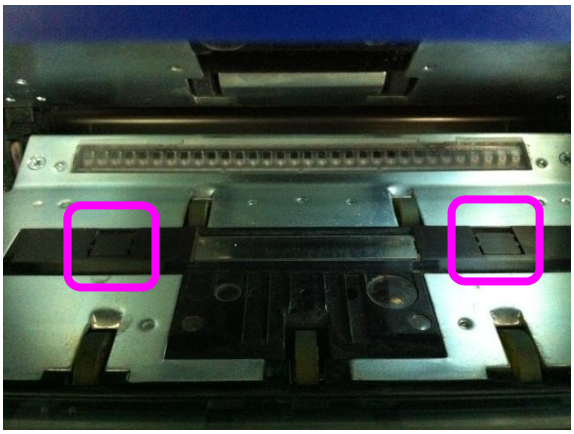

In case of Center MG machine, MG Sensor Harness is replaced with the new type MG Sensor.

<Old MG Sensor Harness>

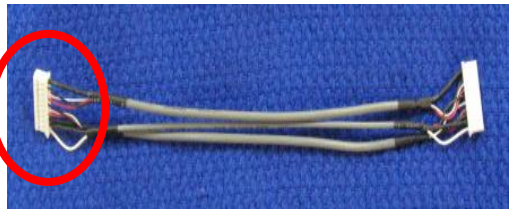

<New MG Sensor Harness>

*** Machine with Side MG**

1. Remove Detector Module from the machine.

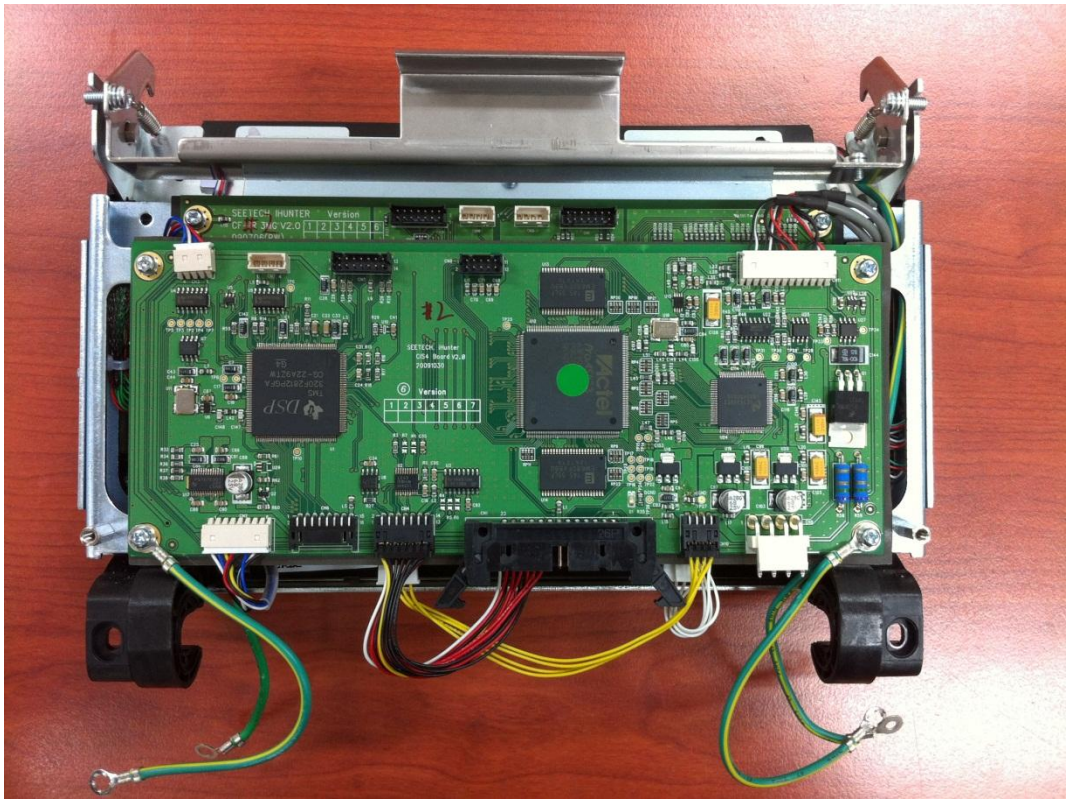

2. After remove DETECTOR COVER PLATE, Separate CIS Main Board from Detector Module.

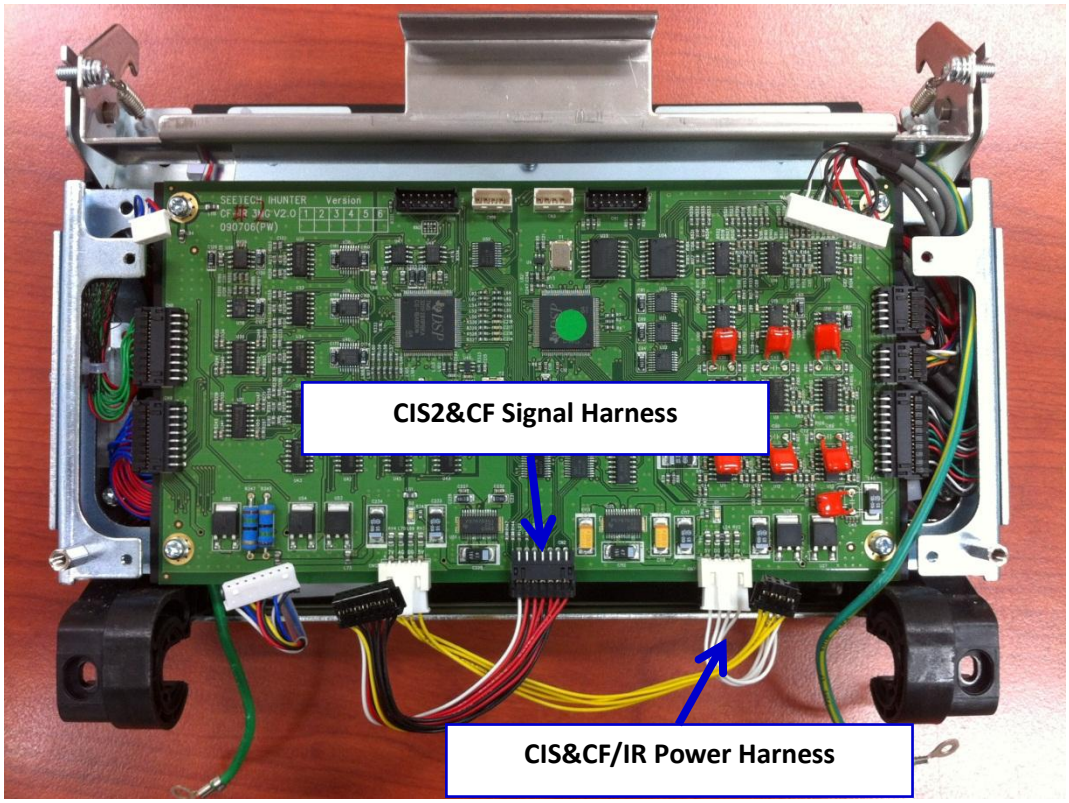

3. Remove CF-IR Main Board from Detector Module.

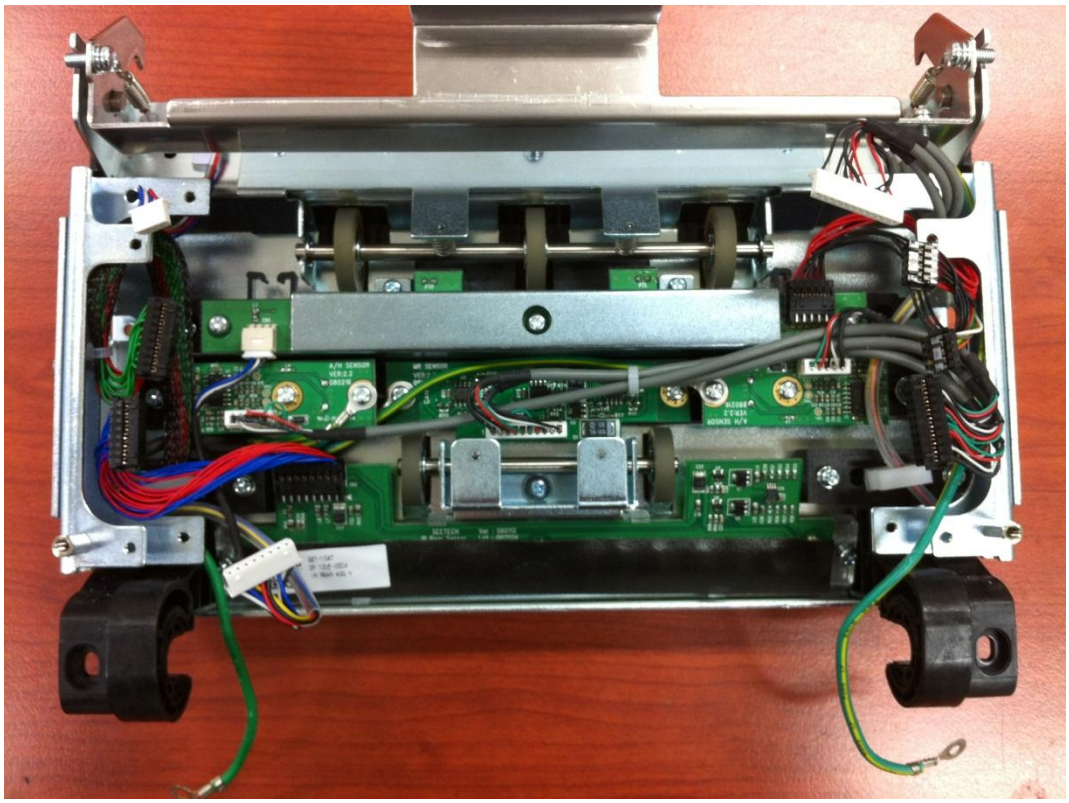

4. Put CIS ES SHIELD to Detector Module as below.

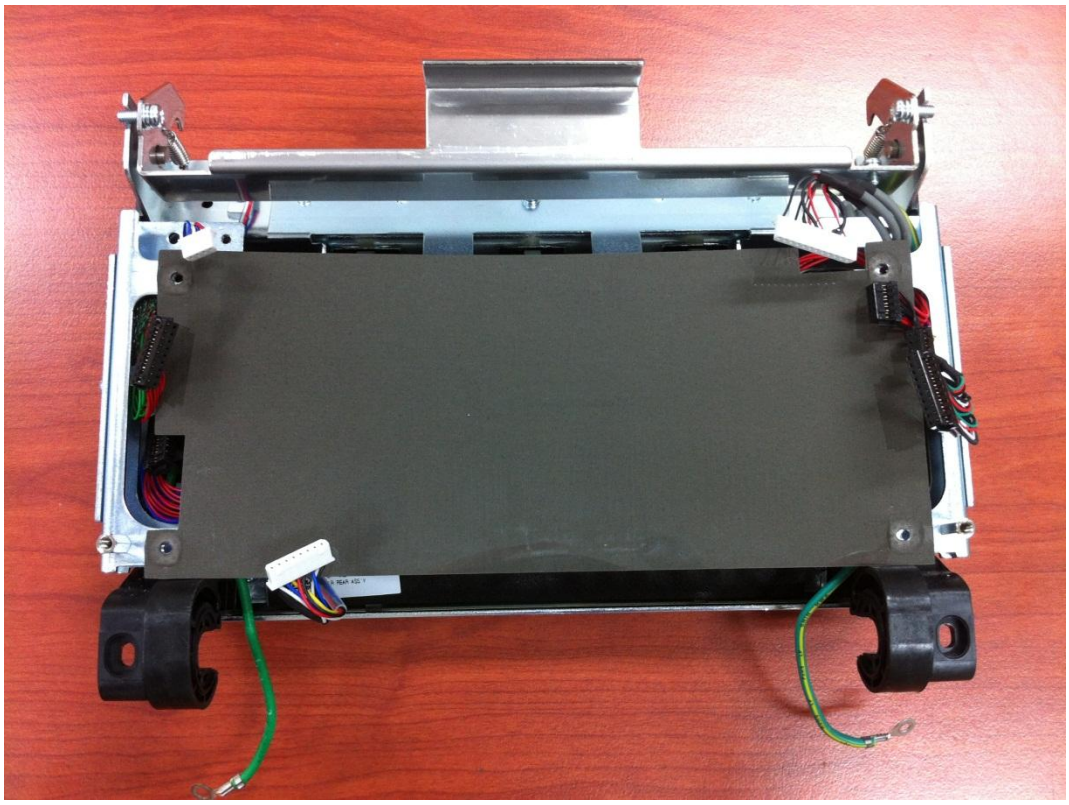

5. Put CDM Board and connect the harnesses correctly.

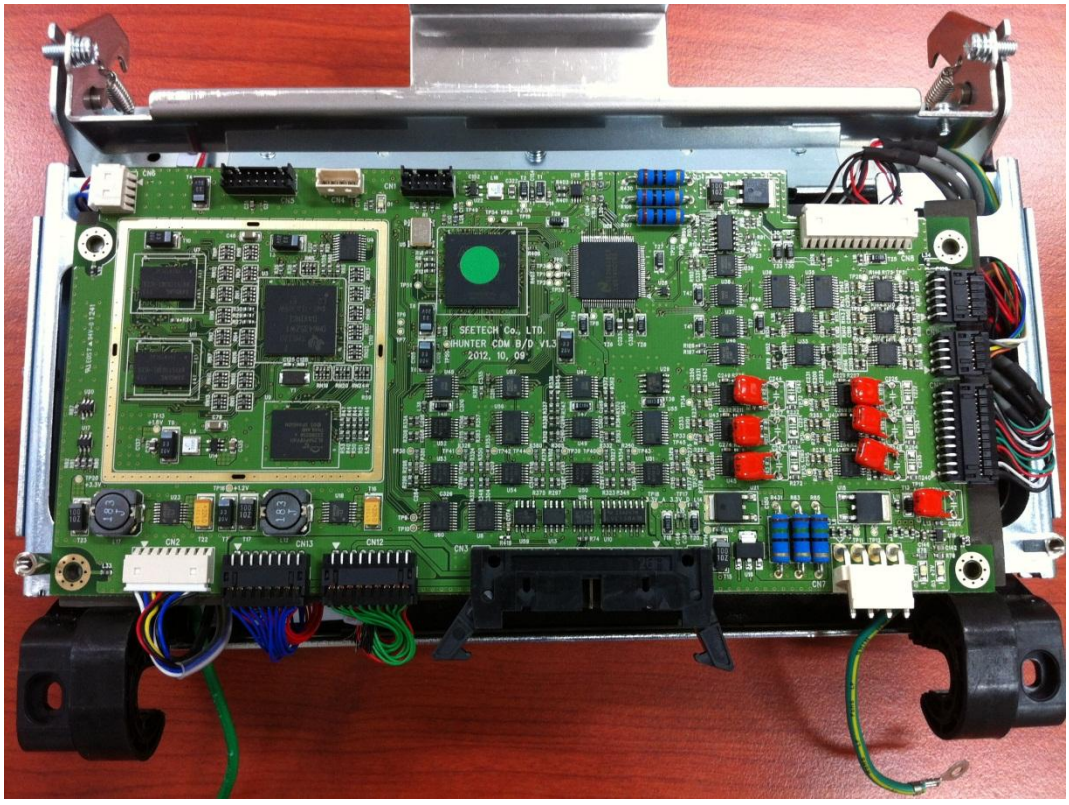

6. Tighten Screws.

If ground cables were added to CIS 2 Main Board, add ground cables too.

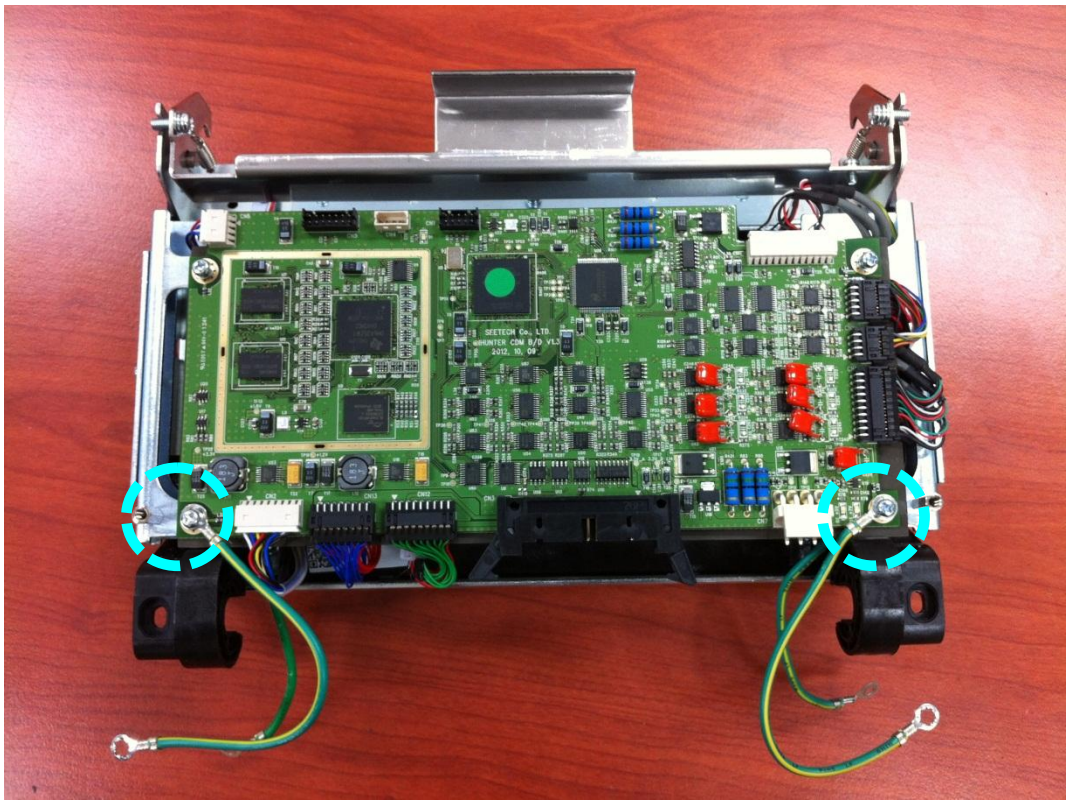

7. Arrange Front&Rear Sensor Harness and MG Sensor Harness as below.

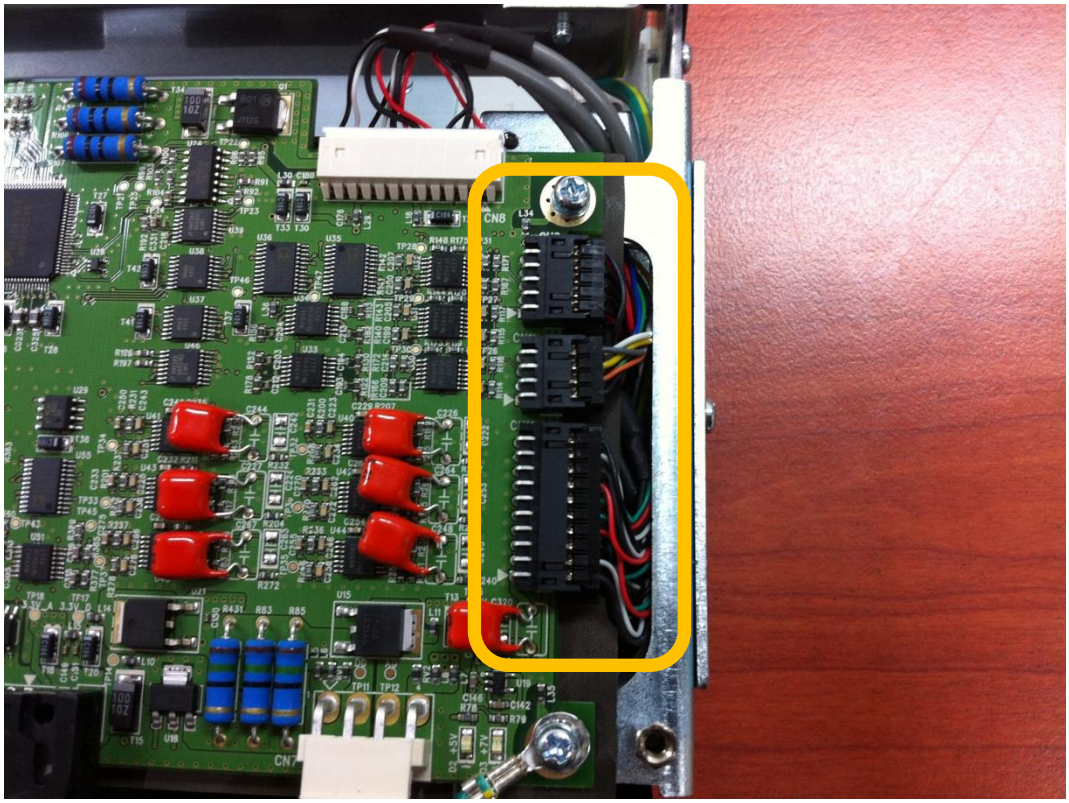

8. Assemble DETECTOR COVER PLATE and check Front&Rear Sensor Harness and MG Sensor Harness are not pressed by DETECTOR COVER PLATE.

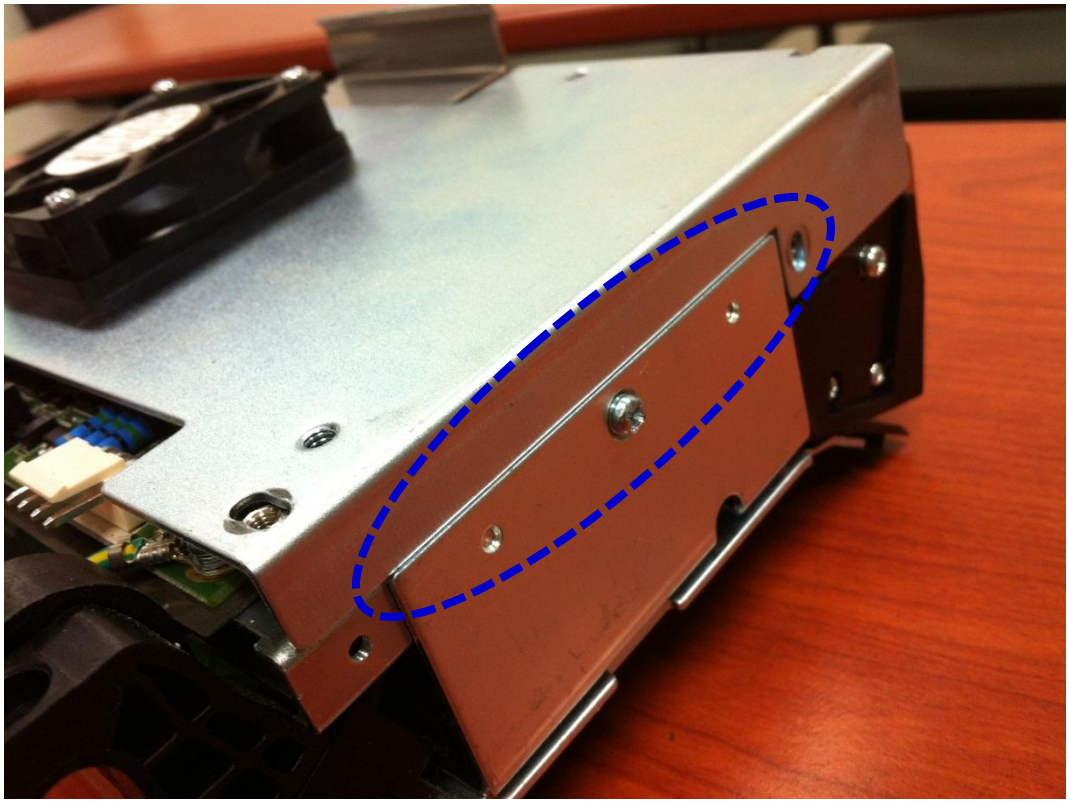

9. Assemble Detector Module to the machine.

10. With the new upgrade instructions, try to upgrade the machine.

11. Calibrate all parts. The calibration method is not changed.

*** Machine with Center MG**

1. Remove Detector Module from the machine.

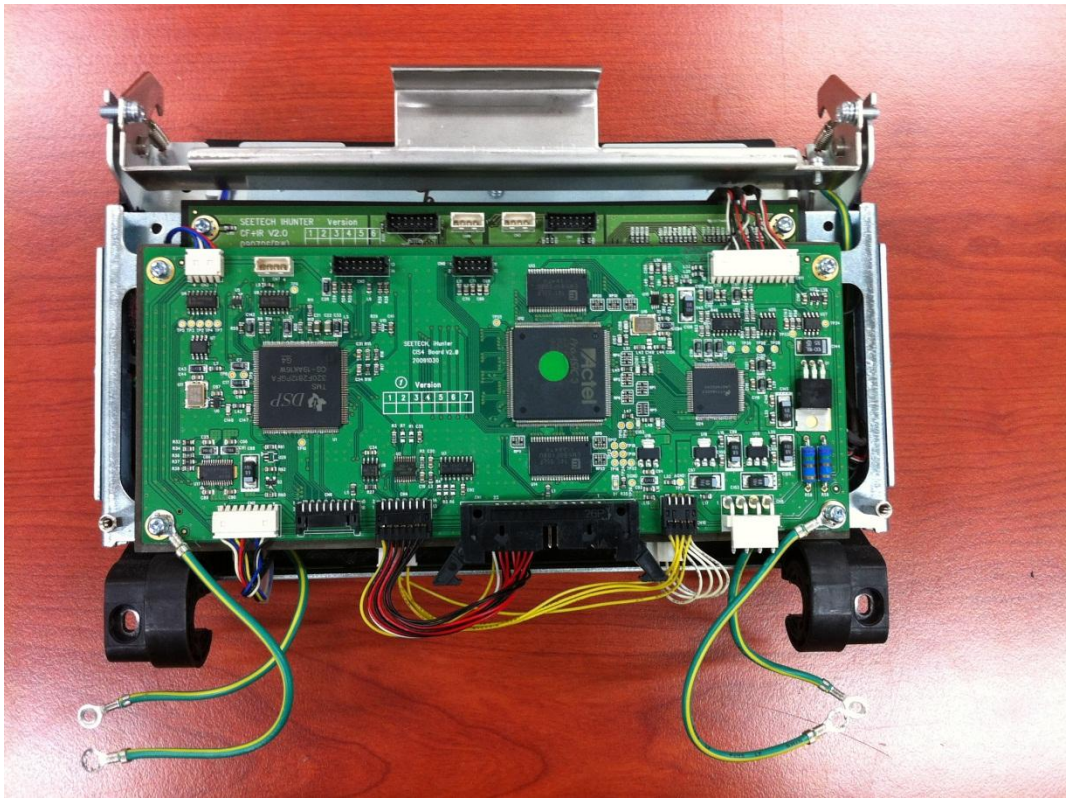

2. After remove DETECTOR COVER PLATE, Separate CIS Main Board from Detector Module.

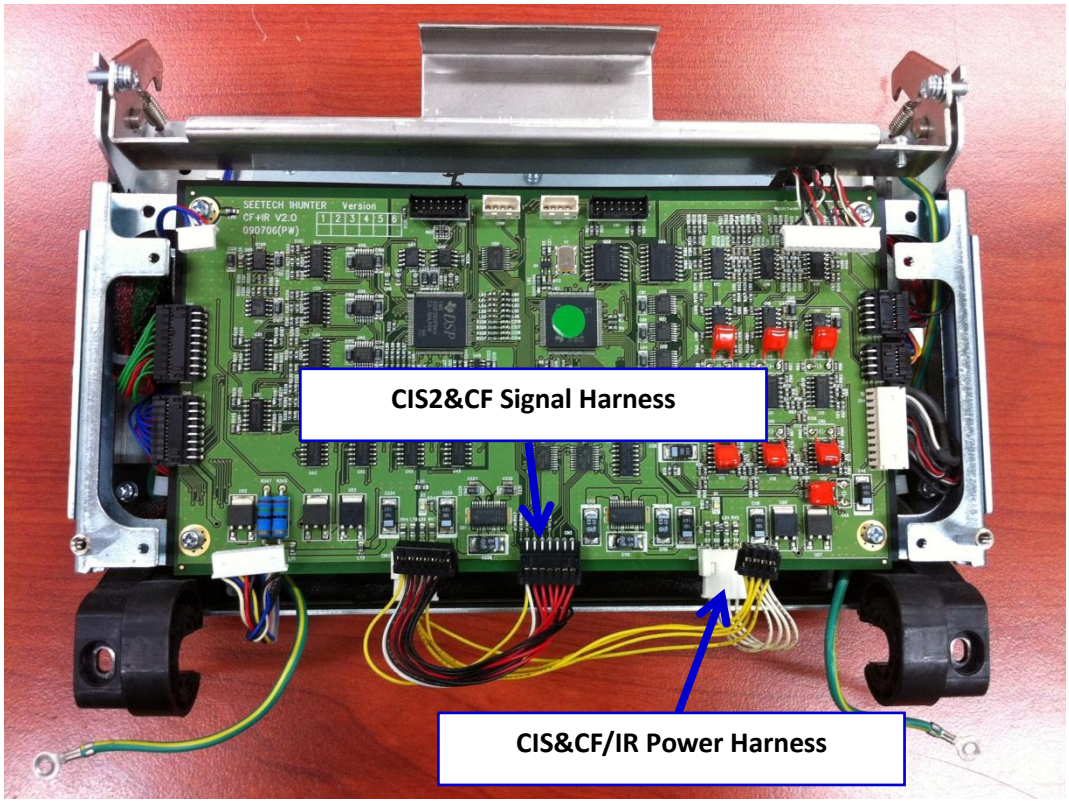

3. Remove CF-IR Main Board from Detector Module.

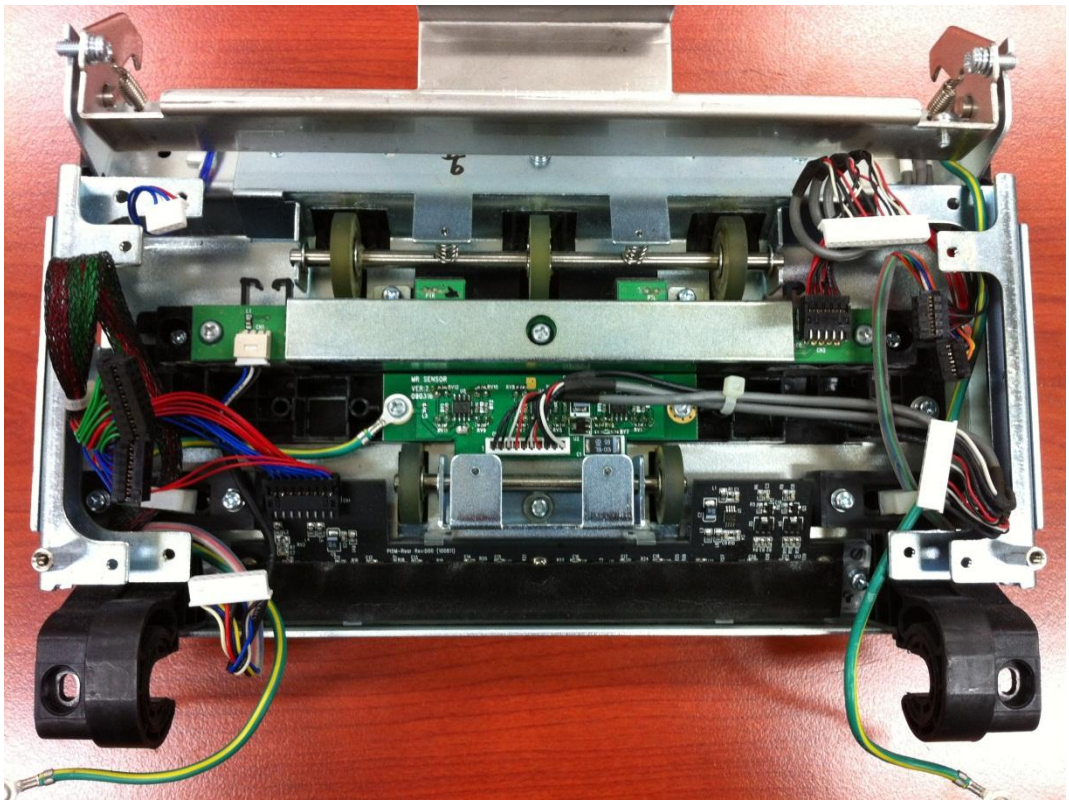

4. Replace old MG Sensor Harness with the new type.

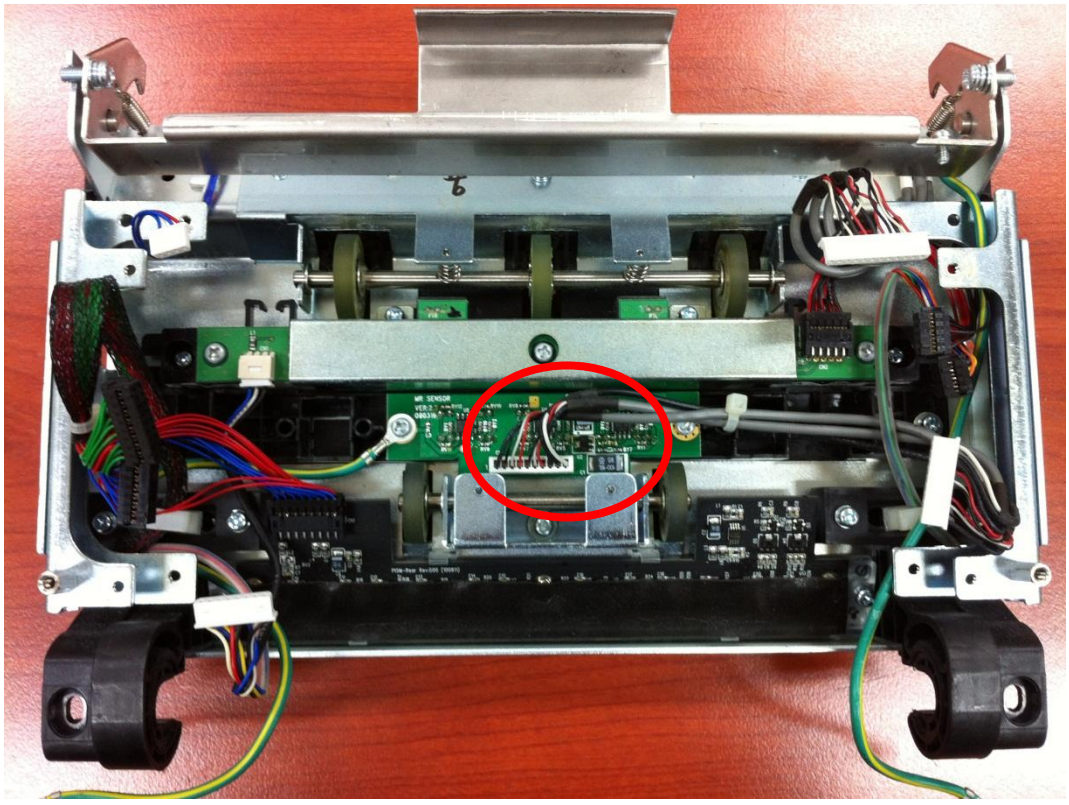

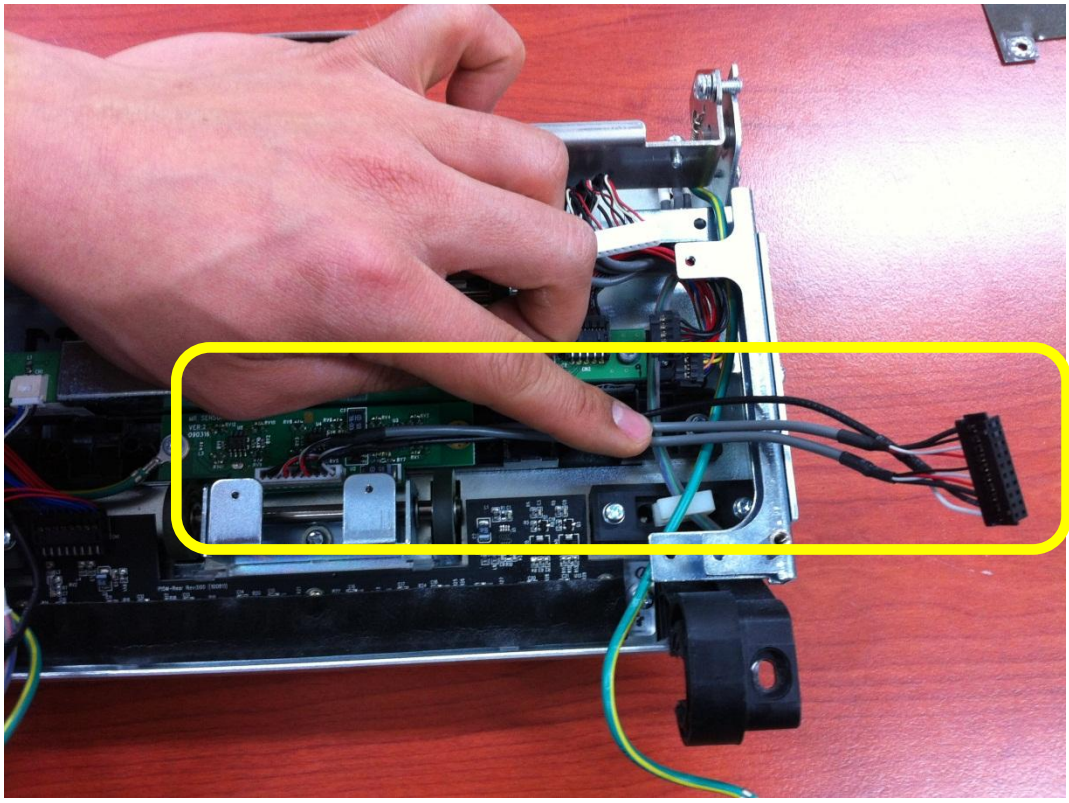

5. Arrange the new MG Sensor without touching it to rollers.

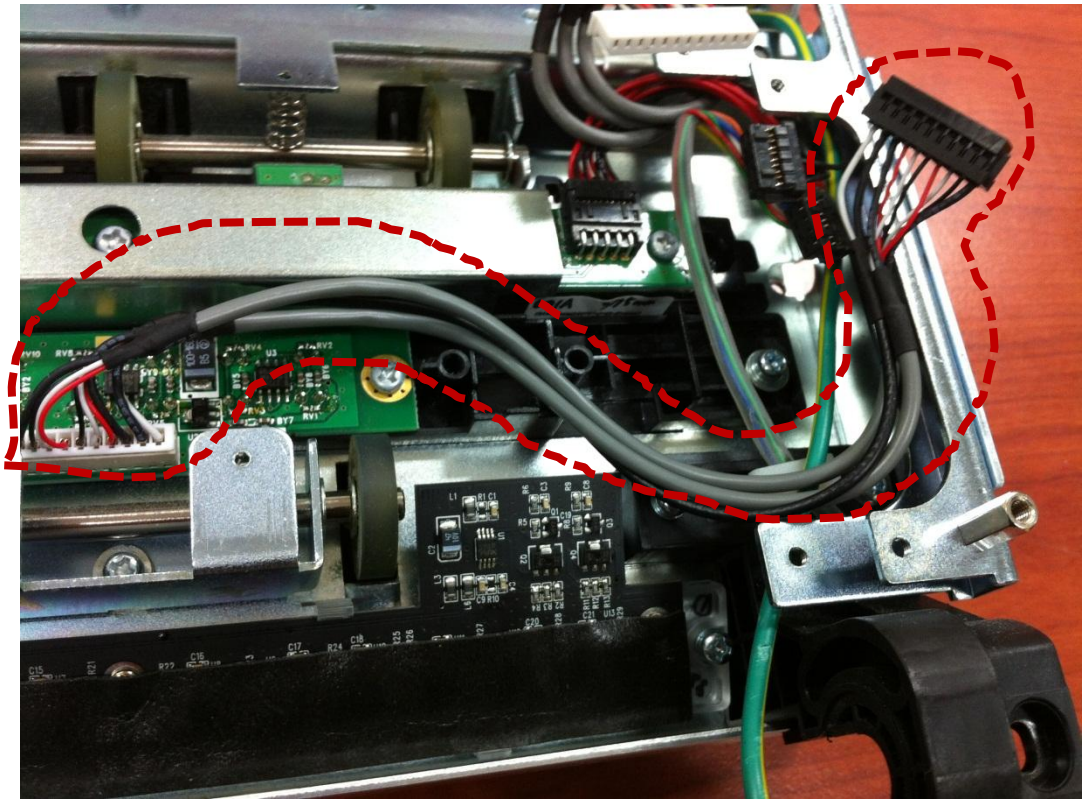

6. Put CIS ES SHIELD to Detector Module as below.

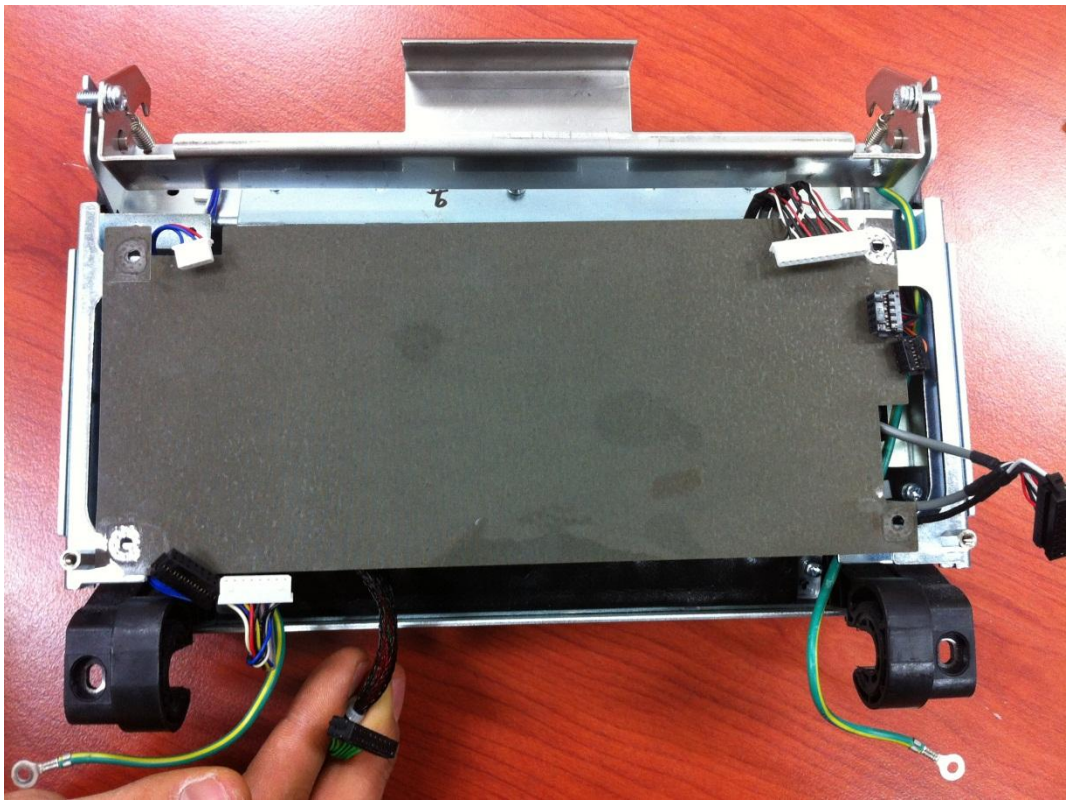

7. Put CDM Board and connect the harnesses correctly.

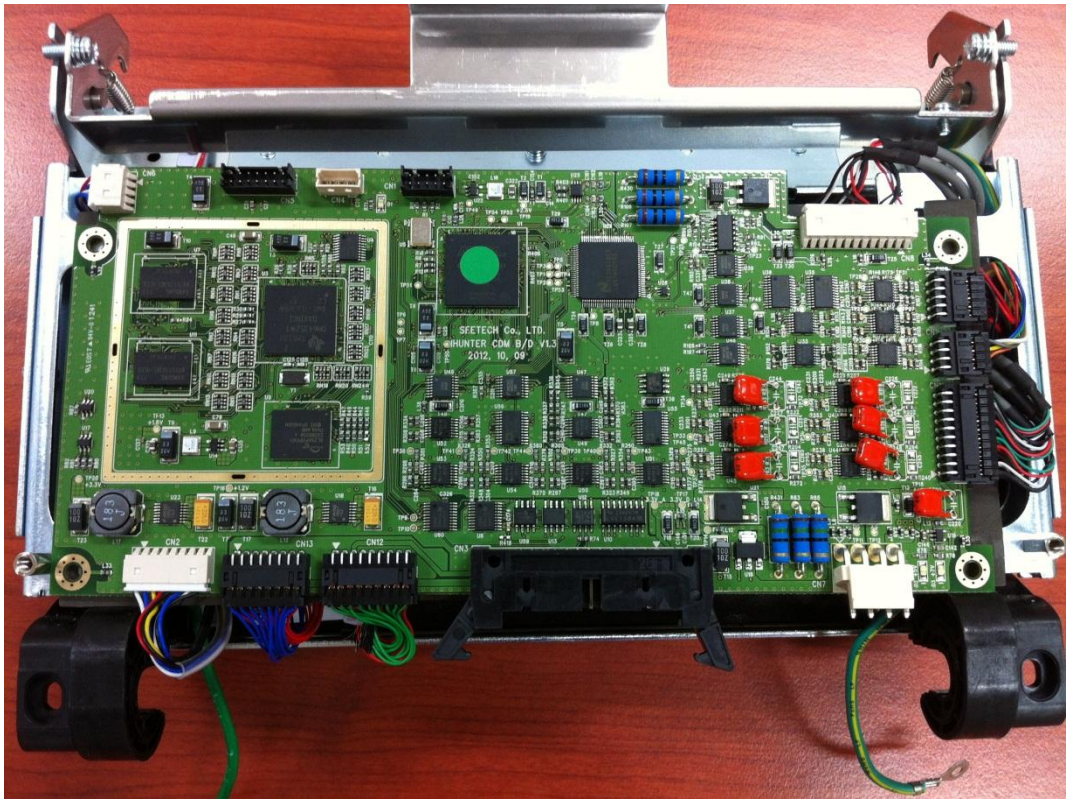

8. Tighten Screws.

If ground cables were added to CIS 2 Main Board, add ground cables too.

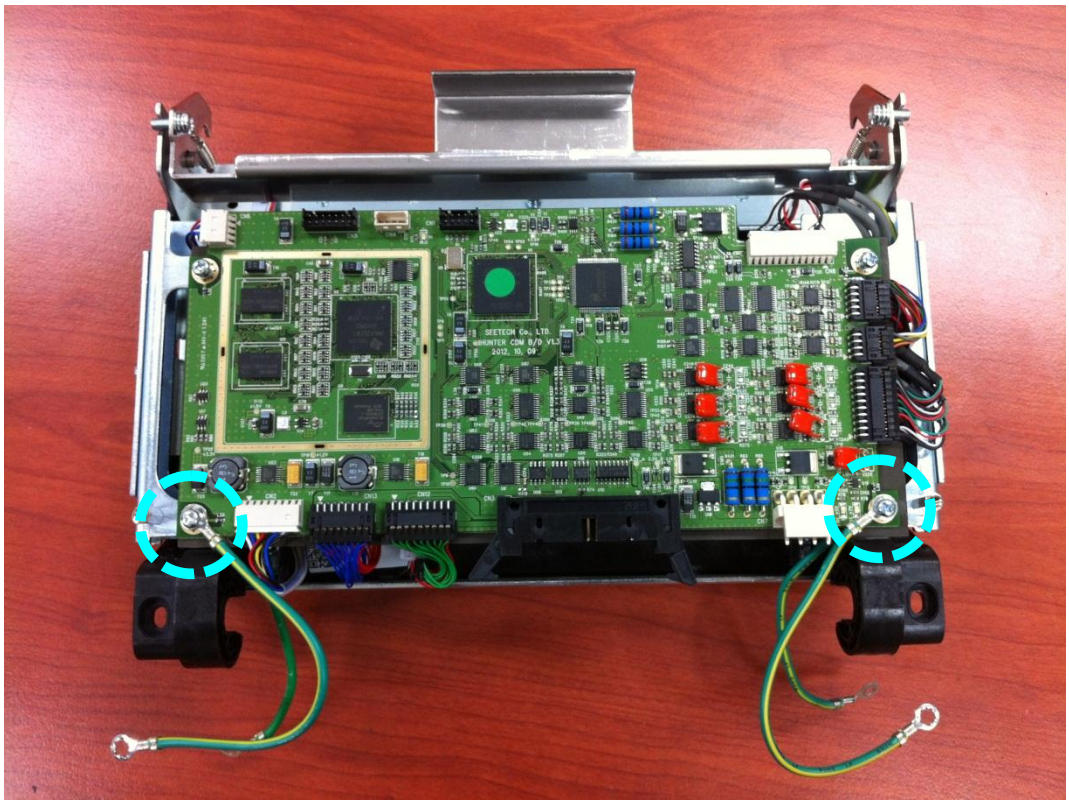

9. Arrange Front&Rear Sensor Harness and MG Sensor Harness as below.

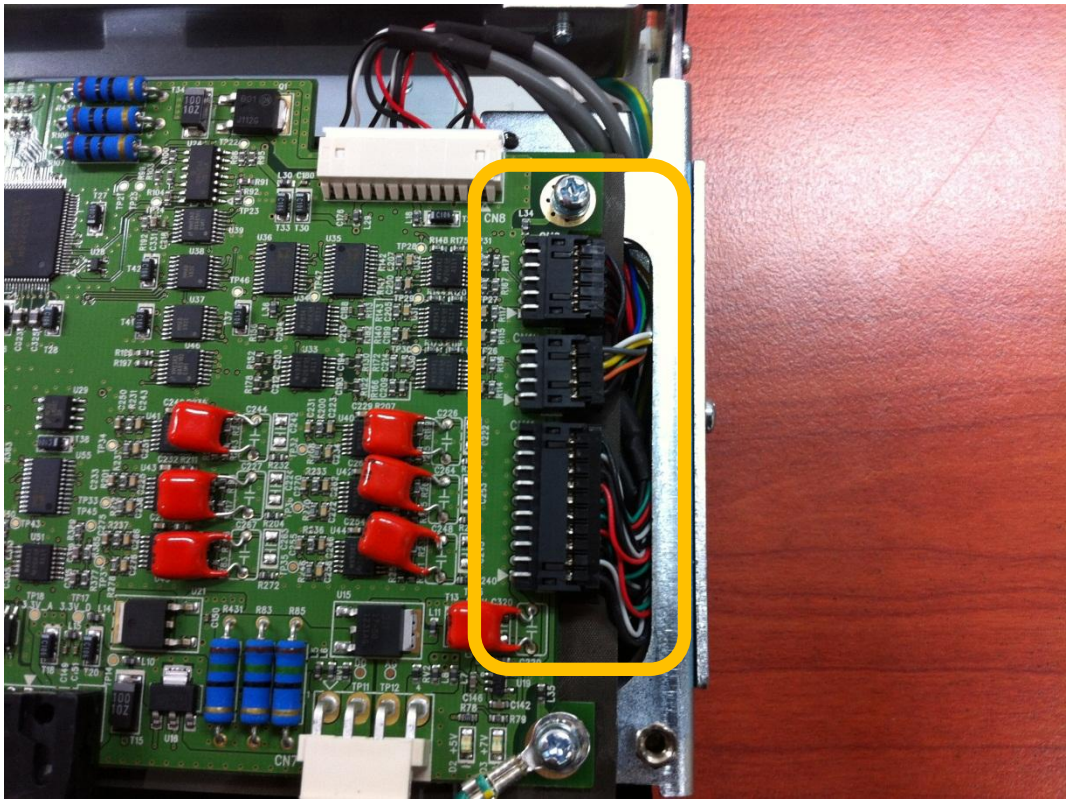

10. Assemble DETECTOR COVER PLATE and check Front&Rear Sensor Harness and MG Sensor Harness are not pressed by DETECTOR COVER PLATE.

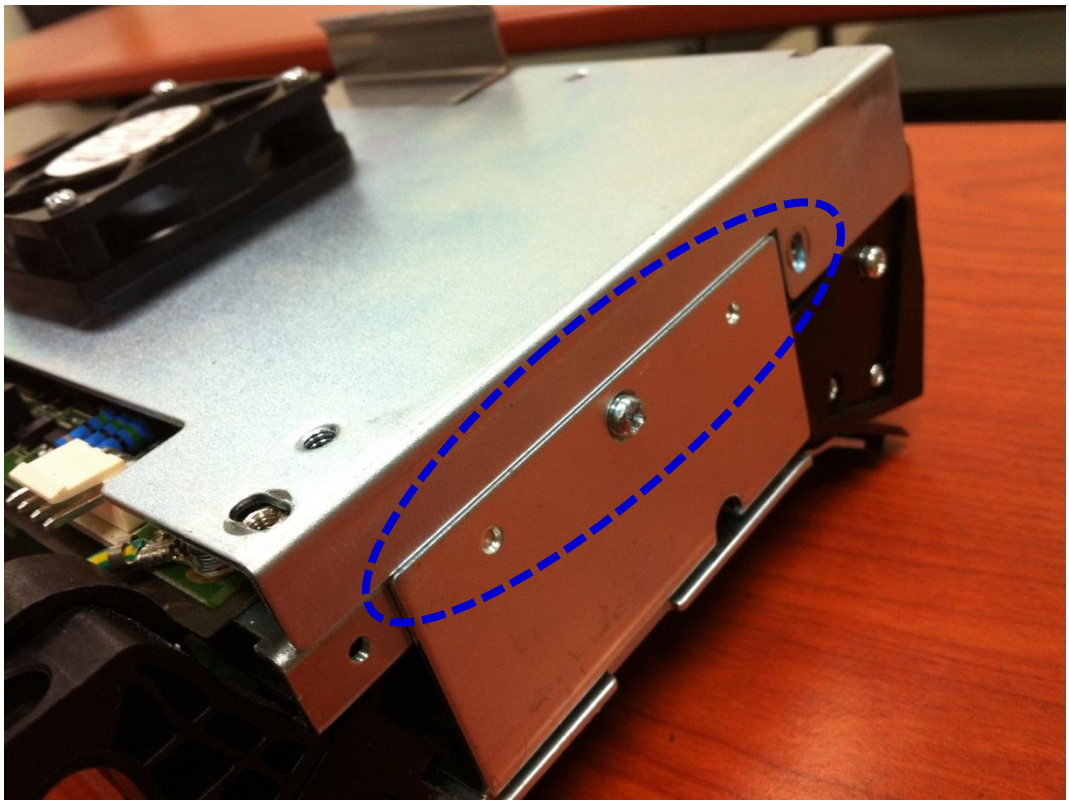

11. Assemble Detector Module to the machine.

12. With the new upgrade instructions, try to upgrade the machine.

13. Calibrate all parts. The calibration method is not changed.

7-31. HOW TO REPLACE SORTING BELT

1. Remove left and right cover.

2. Remove 2 screws from back side.

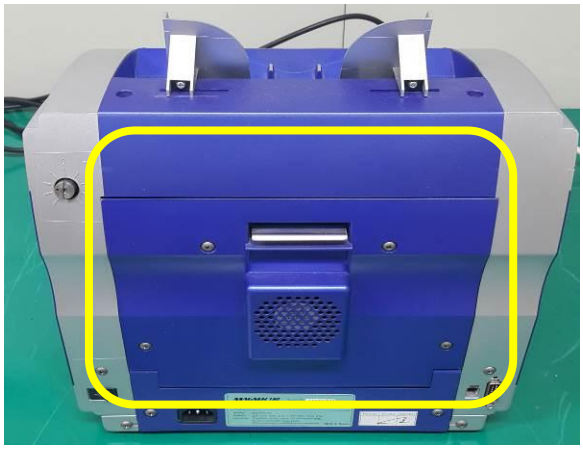

3. Open Rear cover.

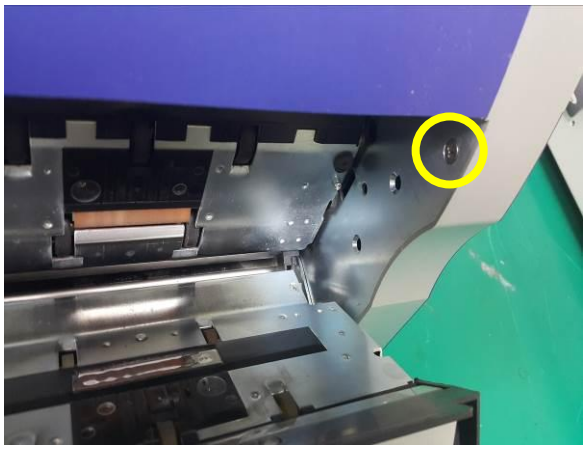

4. Remove screw form both side.

5. Open Front cover.

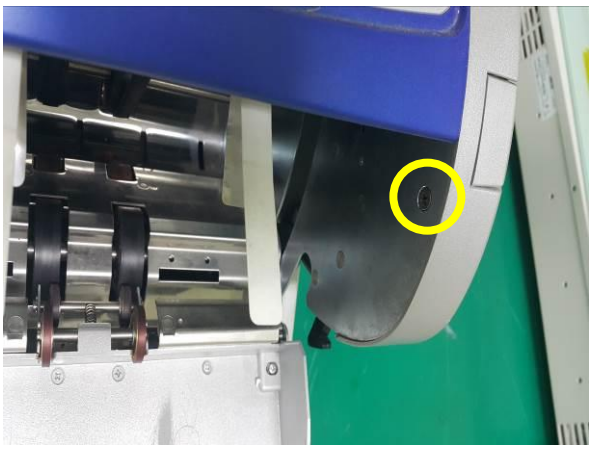

6. Remove screw form both side.

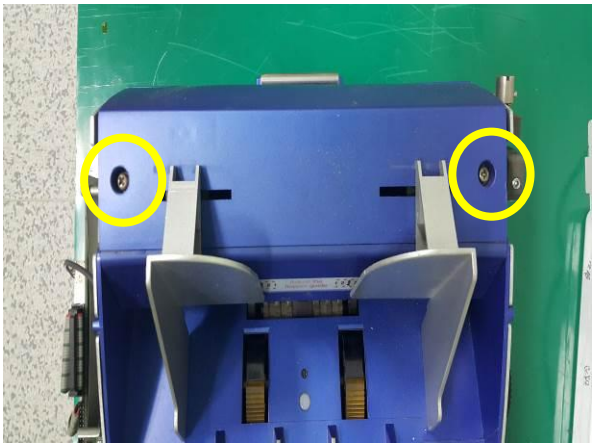

7. Remove 2 screws from upside and remove HOPPER GUIDE COVER ASS'Y.

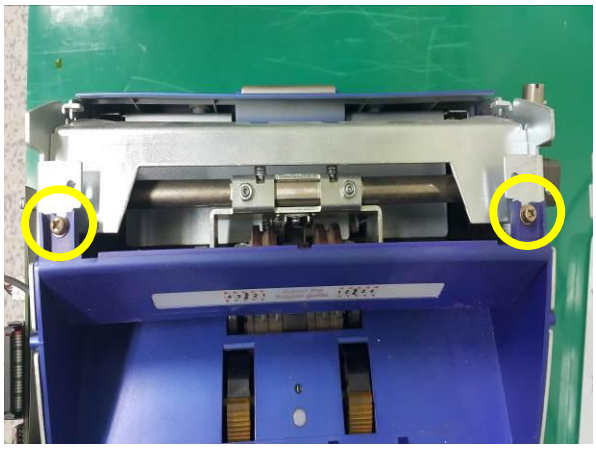

8. Remove 2 screws from upside and remove HOPPER COVER

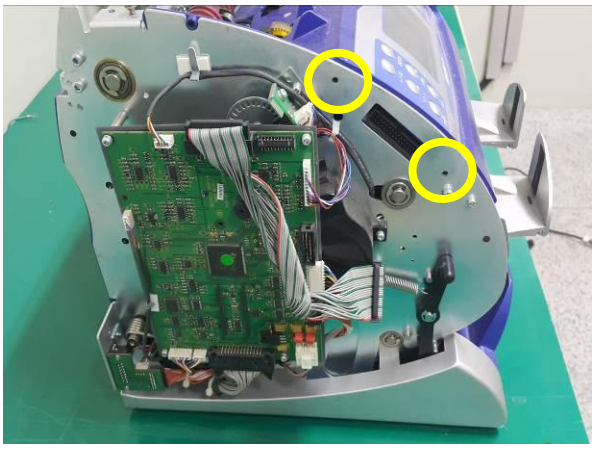

9. Remove 4 screws from the both side and remove FRONT COVER.

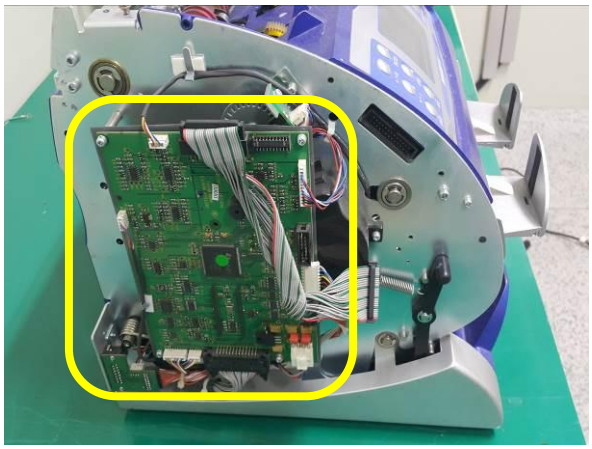

10. Remove all harnessed from Main B/D and remove Main B/D

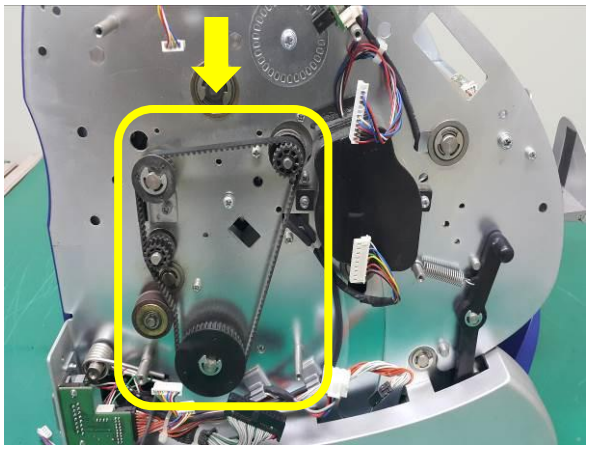

11. Remove SUB MOTER BELT.

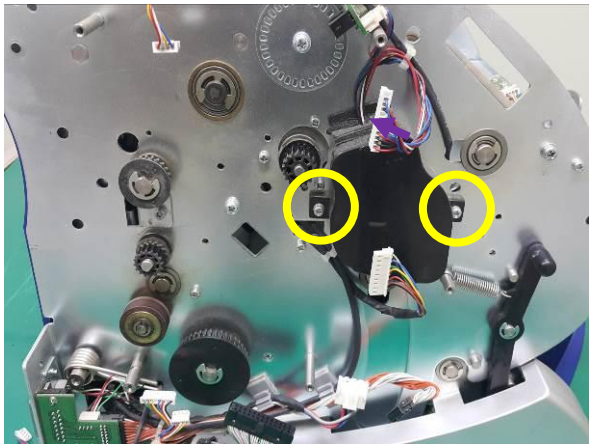

12. Remove 2 screws and remove MAIN ENCODER COVER

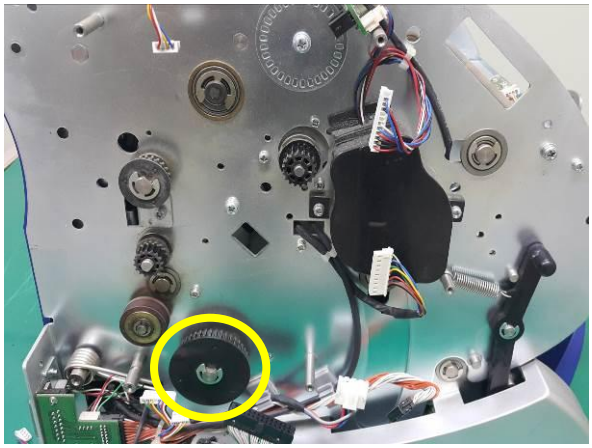

13. Remove E-ring and PULLY.

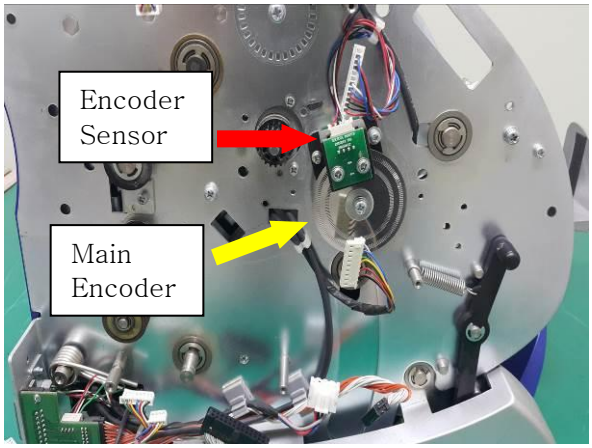

14. Remove the screw and remove MAIN ENCODER.
You don't have to remove the Encoder Sensor.

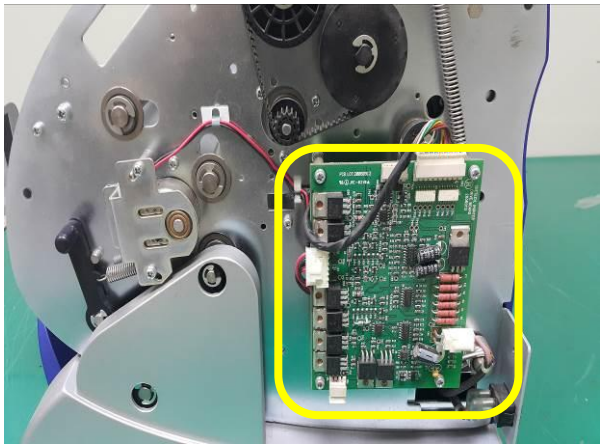

15. Removed all harnessed from Motor Drive B/D and remove Motor Drive B/D.

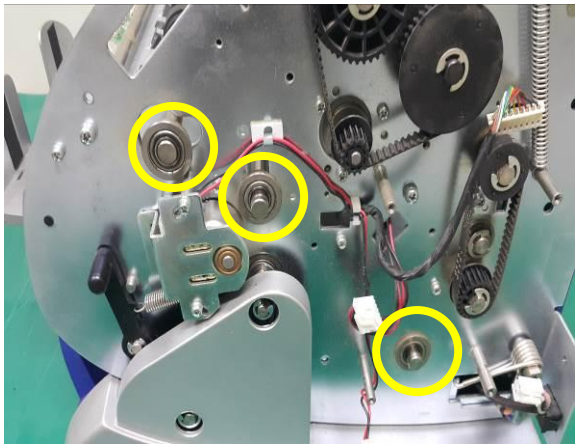

16. Removed 3 E-RINGS and BEARING from left side.

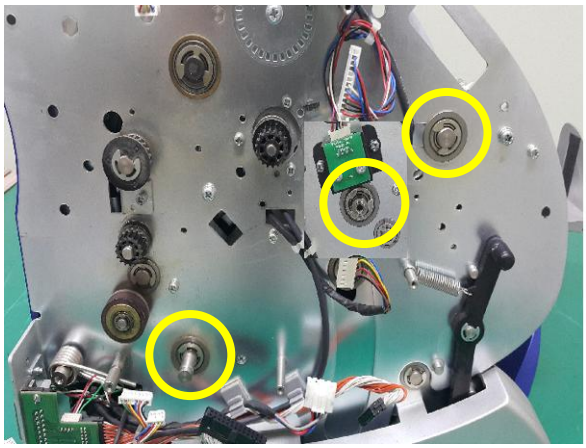

17. Removed 3 E-RINGS and BEARINGS from right side.

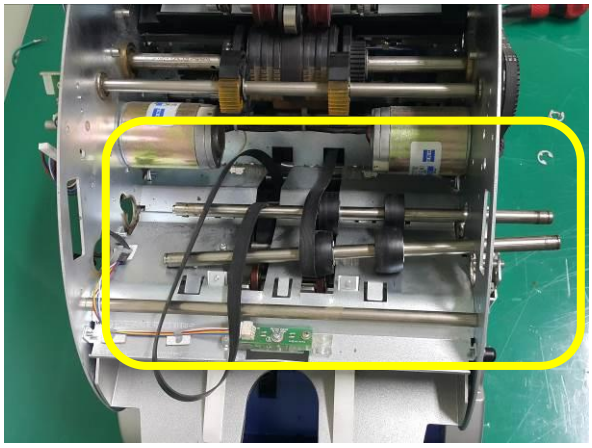

18. Move the shaft and remove SORTING BELT.
    Disassembly is finish.
    Please assemble it in reverse order.

CHAPTER 8. UPGRADE & CALIBRATION

This chapter is for only technical engineer.

When update machine with the laest upgrade software or add new function to machine, please try to upgrade machine according to this chapter.

[ex1) software upgrade, software bugs, function upgrade, additional technical part, additional hardware, etc....]

[ex2) additional option(Old&New, serial number function, etc....)]

8-1. UPGRADE INSTRUCTION

1. Connect Power cable to the machine.

2. Connect serial cable (15P-15P) between the machine and upgrade board.

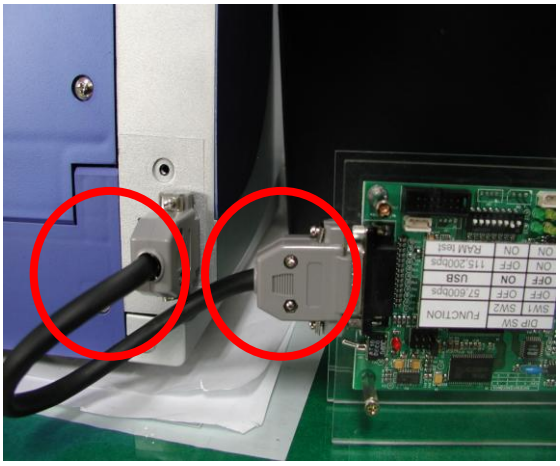

3. Connect the cable (USB or Serial cable<9P-9P>) between upgrade board and PC.

<< USB >>

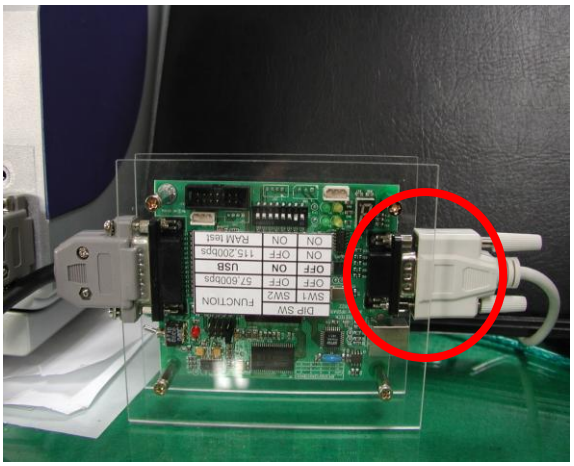

<< SERIAL >>

4. Set the baud rate using dip switch referring to following table.

DIP SWITCH								FUNCTION	REMARK
1	2	3	4	5	6	7	8		
ON	OFF	OFF	OFF	OFF	OFF	OFF	OFF	57,600 BPS	FOR SERIAL
OFF	ON	OFF	OFF	OFF	OFF	OFF	OFF	115,200 BPS	FOR SERIAL
OFF	OFF	ON	OFF	OFF	OFF	OFF	OFF	**USB**	**DEFAULT**
OFF	OFF	OFF	ON	OFF	OFF	OFF	OFF	FND & LED TEST	THIS IS ONLY TECHNICIAN
OFF	OFF	OFF	OFF	ON	OFF	OFF	OFF	RAM TEST	
OFF	OFF	OFF	OFF	OFF	ON	OFF	OFF	57,600 BPS TEST	
OFF	OFF	OFF	OFF	OFF	OFF	ON	OFF	115,200 BPS TEST	
OFF	OFF	OFF	OFF	OFF	OFF	OFF	ON	USB TEST	

Baud rate is related with upgrade speed. When use USB, the upgrade speed is three times faster than using serial cable.

5. Turn on power the machine and upgrade board.

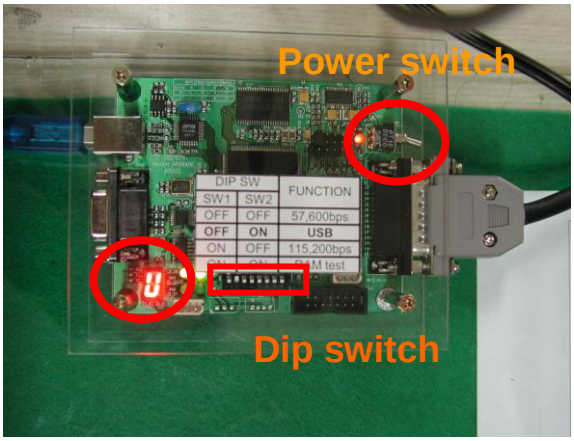

<< USB >>

<< SERIAL-115,200bps >>

6. If use USB, after connecting, PC starts new hardware drive. Setup the USB driver to refer to following.

①

②

Click the **Next** button.

③

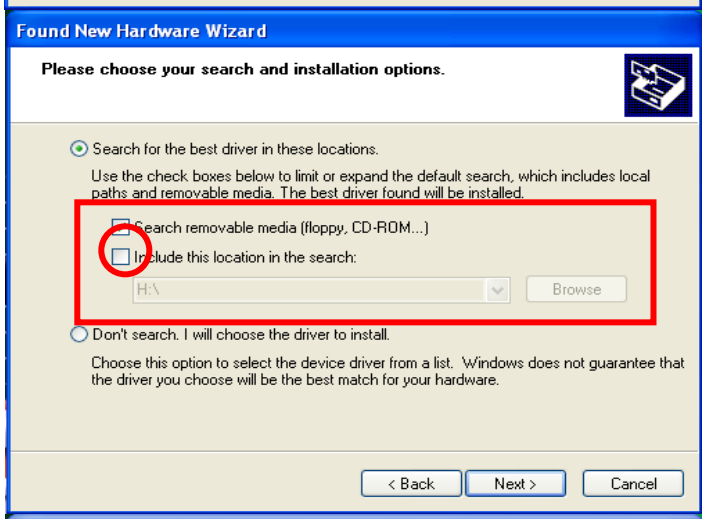

Select the second box and Click the **Browse**.

④

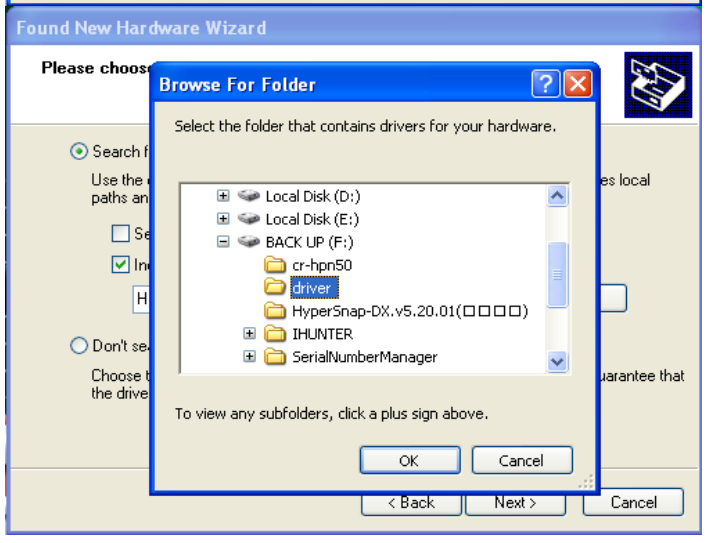

Select the driver folder what we sent and click the **OK** button.

⑤

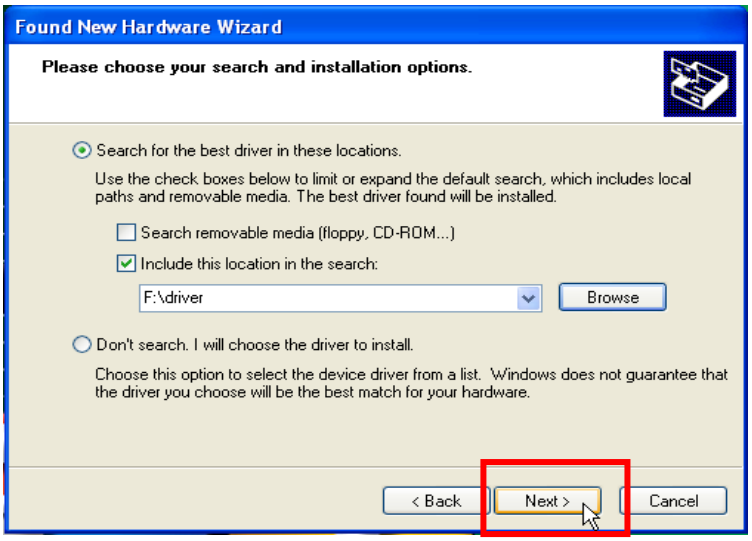

⑥

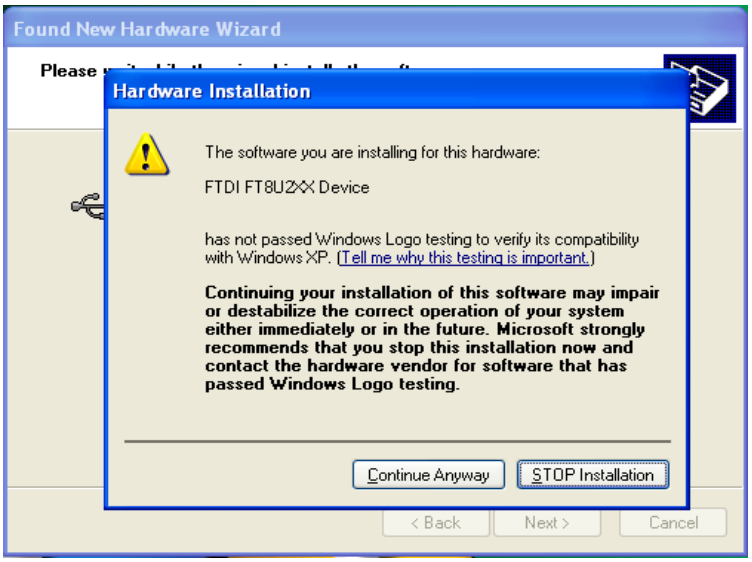

⑦

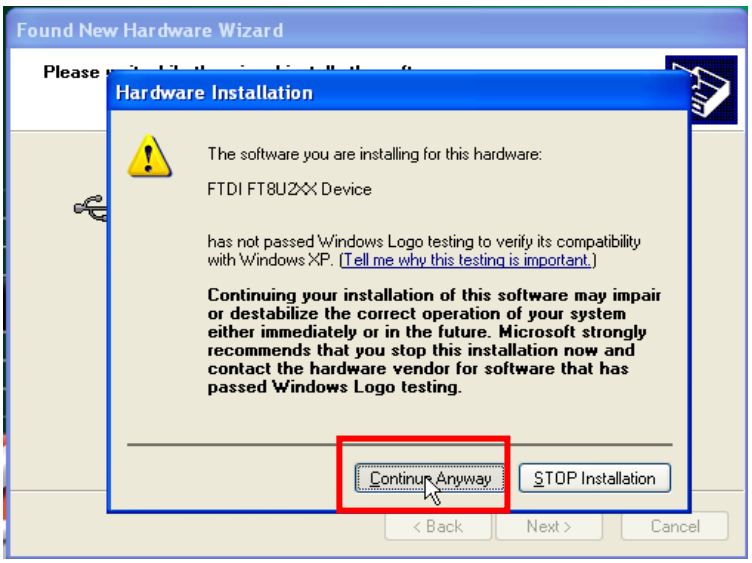

Click the **Continue Anyway** button.

⑧

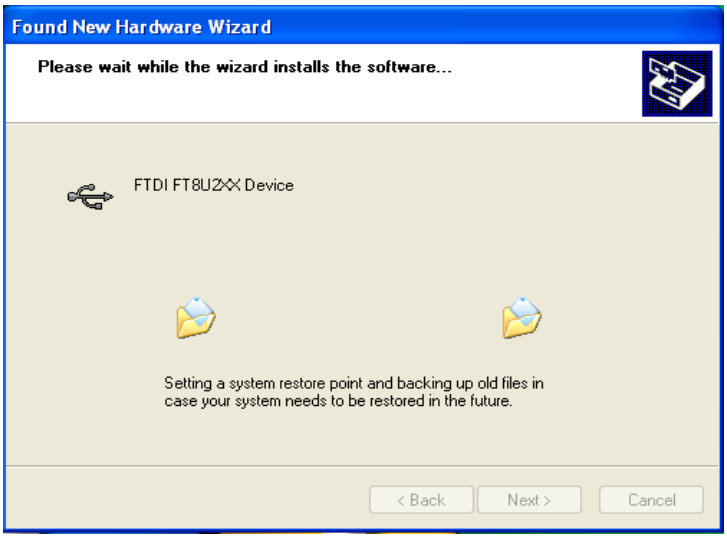

⑨

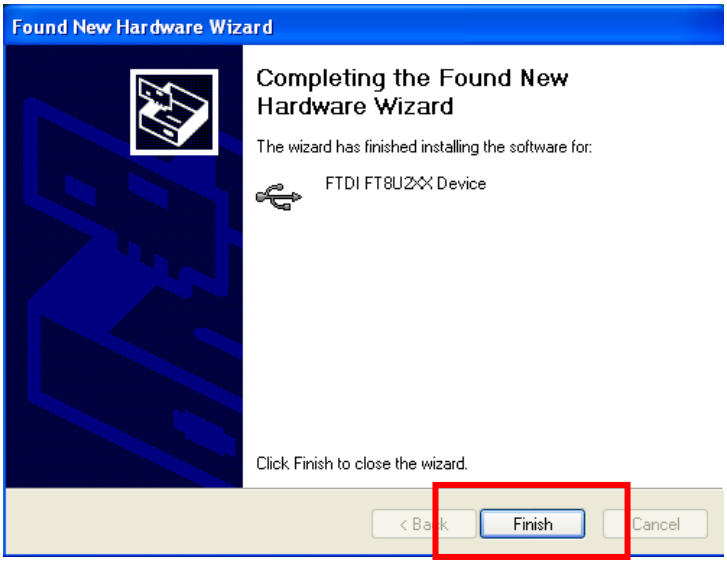

* It is possible that actual instruction is little different by PC conditions.
* After install Driver, you don't need install again in same PC.

7. Execute the **PC_UPGRADE_USB_V0_99.exe**.

①

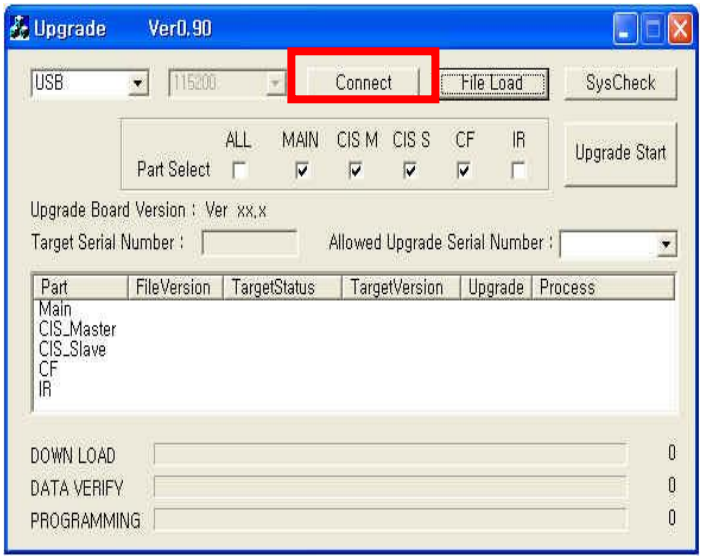

Click the **connect** key.

②

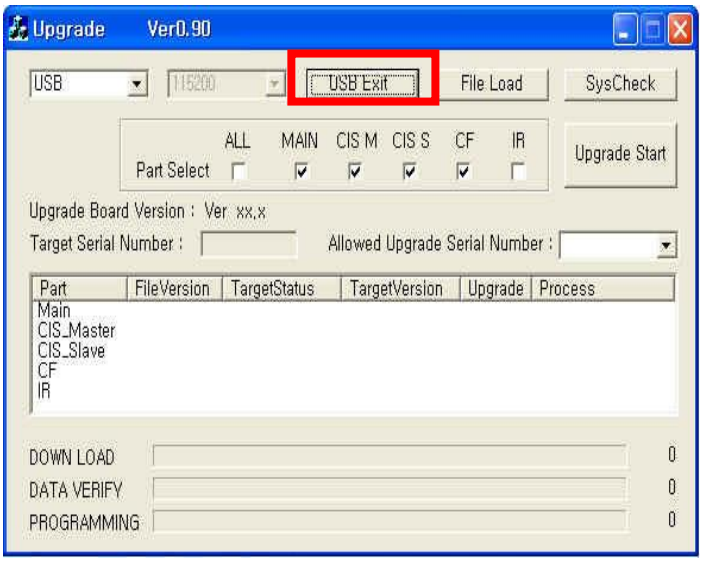

When click connect key, key is changed by “USB Exit”.
If you want to exit USB connection, click “USB Exit”.

③

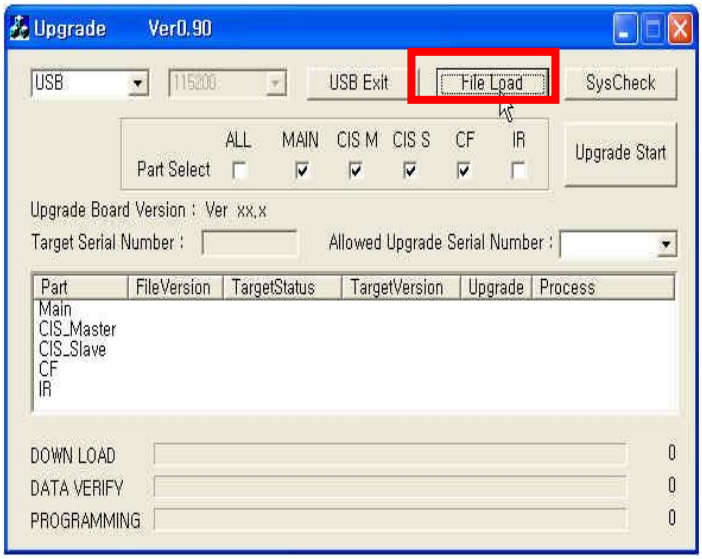

Click “**File Load**” to load upgrade file.

④

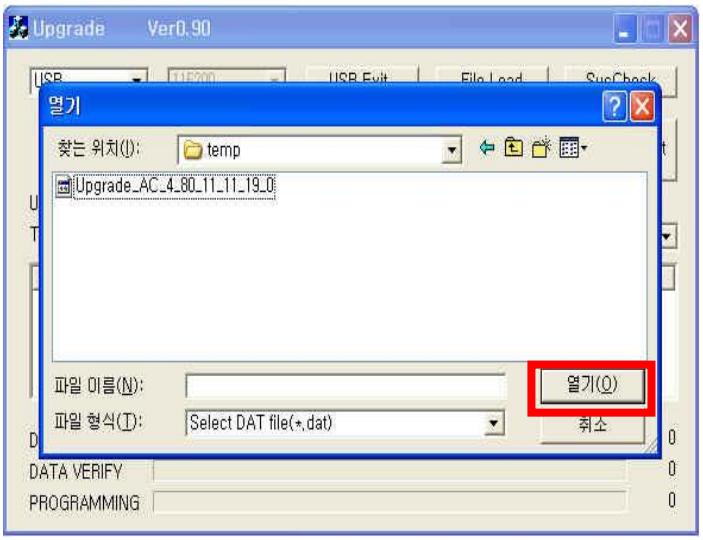

Open the upgrade file.
Upgrade file is different from currency functions.
Upgrade_XX_X_xx_xx_xx_xx_xx_xxx
① ② ③ ④ ⑤ ⑥ ⑦ ⑧

① Currency code(AA~ZZ)
② Boot : 8
③ Main software version(80 means 8.0)
④ CIS Master software version
⑤ CIS Slave software version
⑥ CF software version
⑦ IR software version
⑧ CIS light source & UV rank

⑤

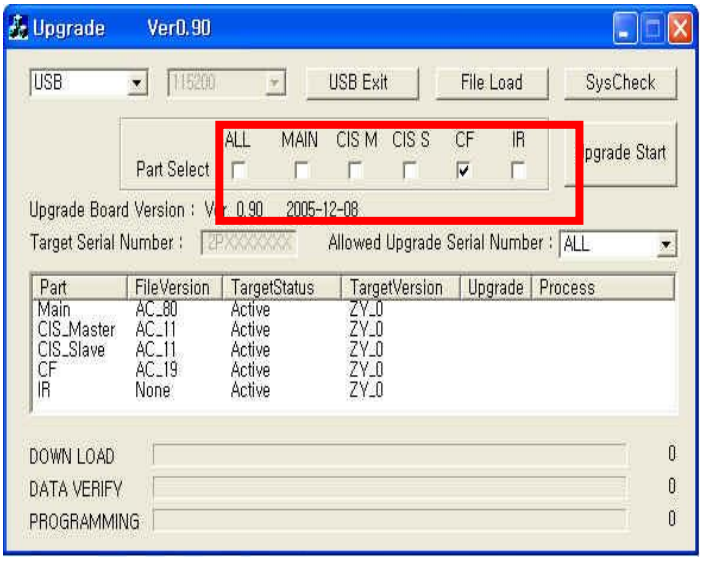

Select the part which you want to upgrade.
If you select "**ALL**", upgrade all of board.

⑥

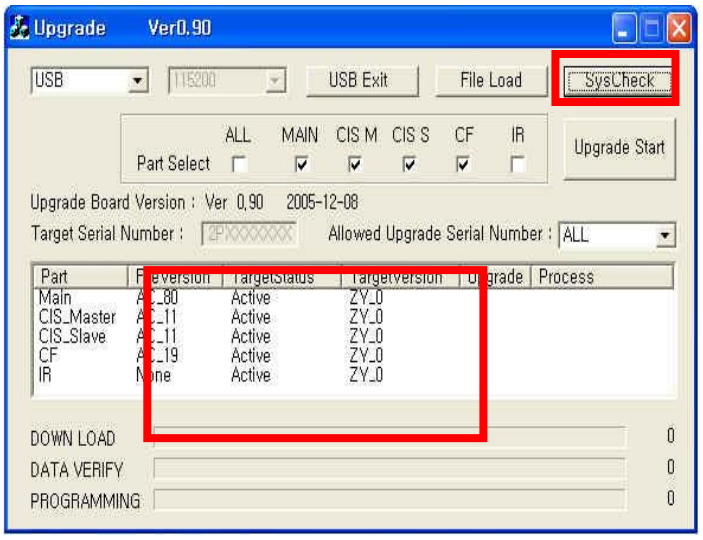

Click the "**SysCheck**".
After self-checking, the result is shown on the window.

⑦

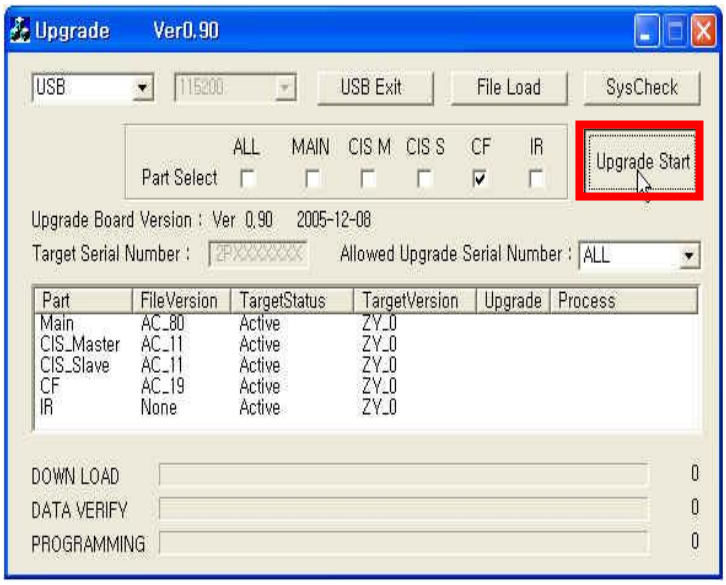

Click the "**Upgrade Start**".

⑧

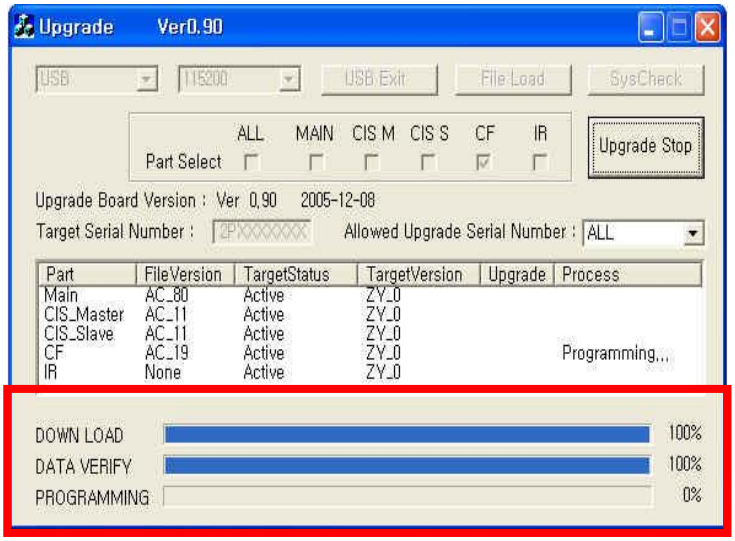

Upgrade is started.

Check the FND of the upgrade board. If display stays "**0**" for more than 1 minute, try to upgrade again or check the connection.

⑨

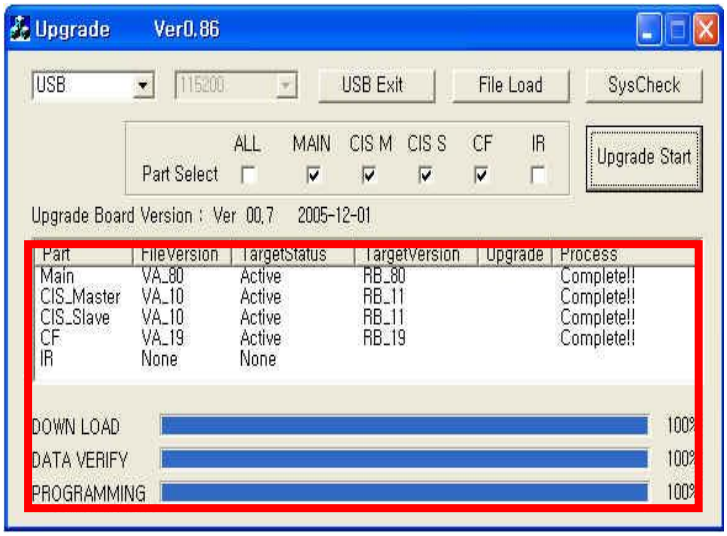

⑩

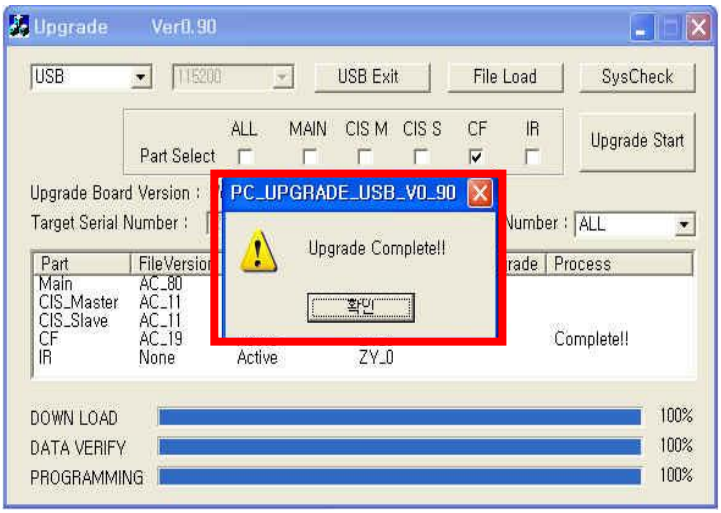

If the upgrade is successful, the following message will be shown.

▲ TIME TABLE

NAME	TIME	REMARK
MAIN Part	1’ 05”	
CIS MASTER Part	1’ 05”	CIS 1 MAIN board has MASTER and SLAVE. CIS 2 MAIN board has MASTER only.
CIS SLAVE Part		
CF Part	1’ 05”	CF-IR Main Board has CF and IR Part.
IR Part	1’ 05”	
TOTAL TIME	4’ 20”	

* It is possible that actual upgrade time using USB is little different by PC conditions.

8. Exit the **PC_UPGRADE_USB_V0_99.exe (The latest version is 0.99)**
9. Turn off the machine and upgrade board.
10. Remove the cable of the machine and upgrade board.
11. We recommend after completing upgrading, calibrate the machine again.

8-2. UPGRADE INSTRUCTION(NEW)

8-2-1. UPGRADE OLD UPGRADE BOARD

Before Start

To upgrade new iHUNTER with CDM Board, you need to prepare followings.

1. Upgrade Board and cables for iHUNTER

2. Prepare USB to Serial Cable (9 pin) which is ready-made.

3. Install USB Driver to your PC for connecting the Upgrade Board with new Firmware to the machine with CDM Board. You can download the Driver from following link.

Download Click Here -> CP201X_Driver

4. Install USB Driver to your PC for suing USB to Serial Cable (9pin)

Download Click Here -> USB2Serial_Driver

When you open the box of USB to Serial 9 pin cable, you can find a CD for USB Driver. Because USB Driver is different from the manufacture of the cable, you have to install the enclosed Driver to your PC.

How to upgrade Upgrade Board

1. Remove the upper plate from Upgrade Board.

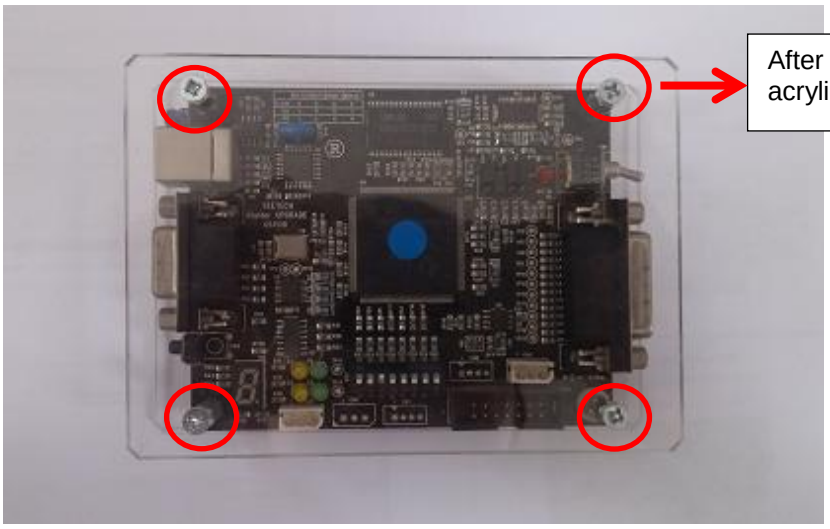

After remove 4 screws, remove the acrylic plate.

2. Check Pin arrangement from Upgrade Board.

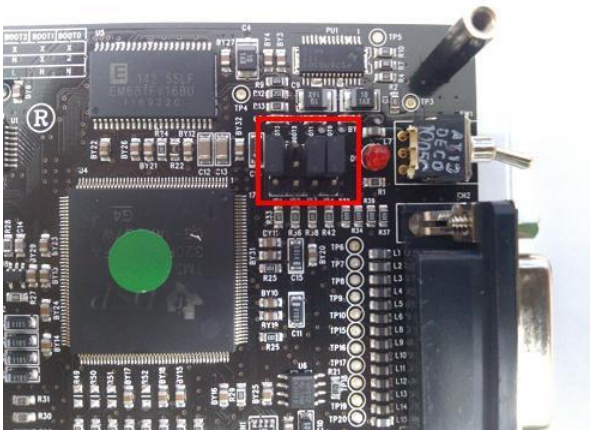

3. Change Pin arrangement as below

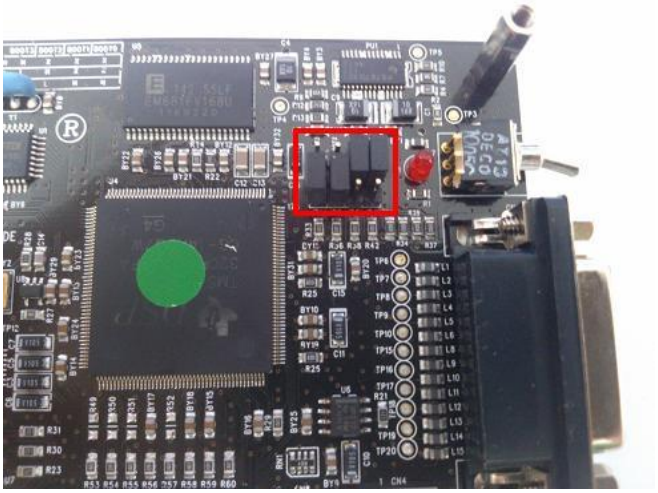

4. Connect USB to Serial Cable (9 pin) to Upgrade Board and PC.

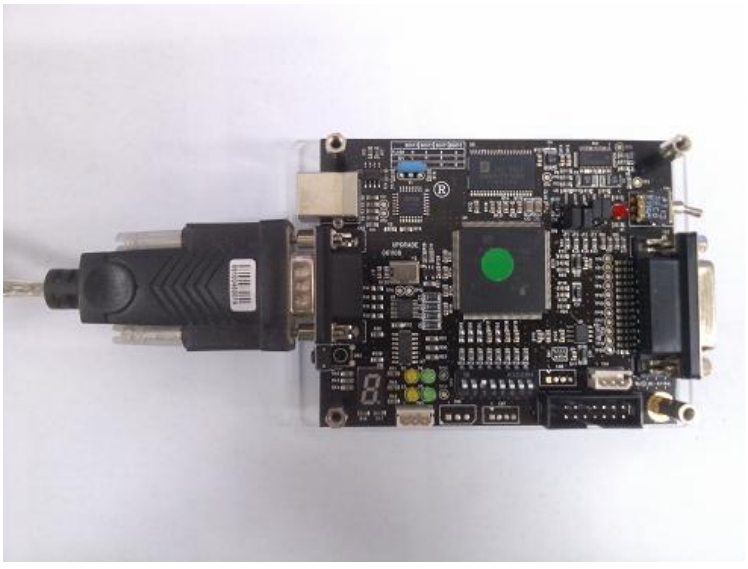

5. Connect 15pin-15pin cable to Machine and Upgrade Board.

6. When turn on the power of Machine, LEDs from Upgrade Board are turned on as below.

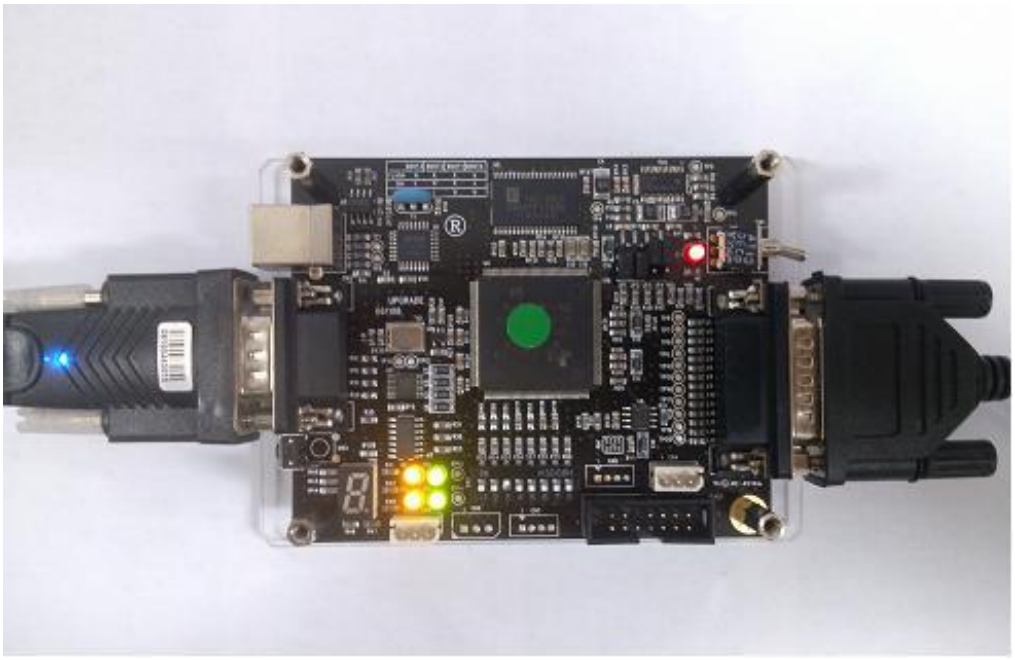

7. Execute New Upgrade Program Ver 1.0.4

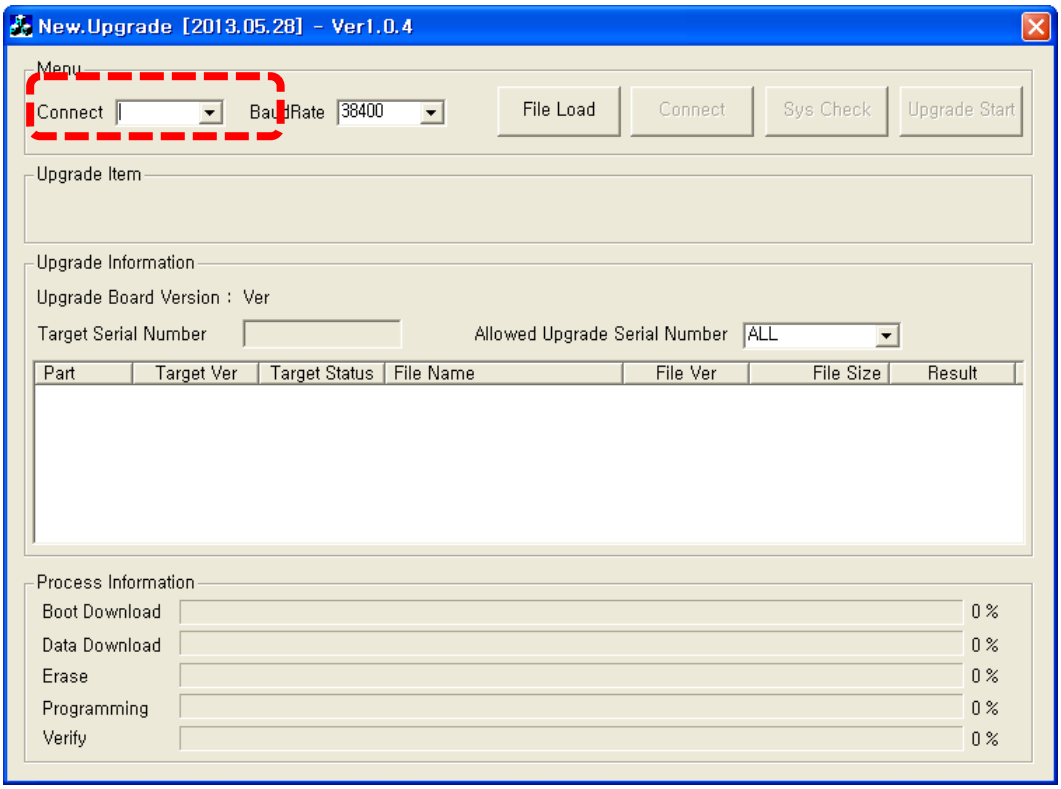

8.lick “File Load” and select UPBD_YYYYMMDD_HHMMSS.IHU.

You can download “UPBD_YYYYMMDD_HHMMSS.IHU” file from following link.

Download Click Here -> UPBD_20130614_171350.IHU

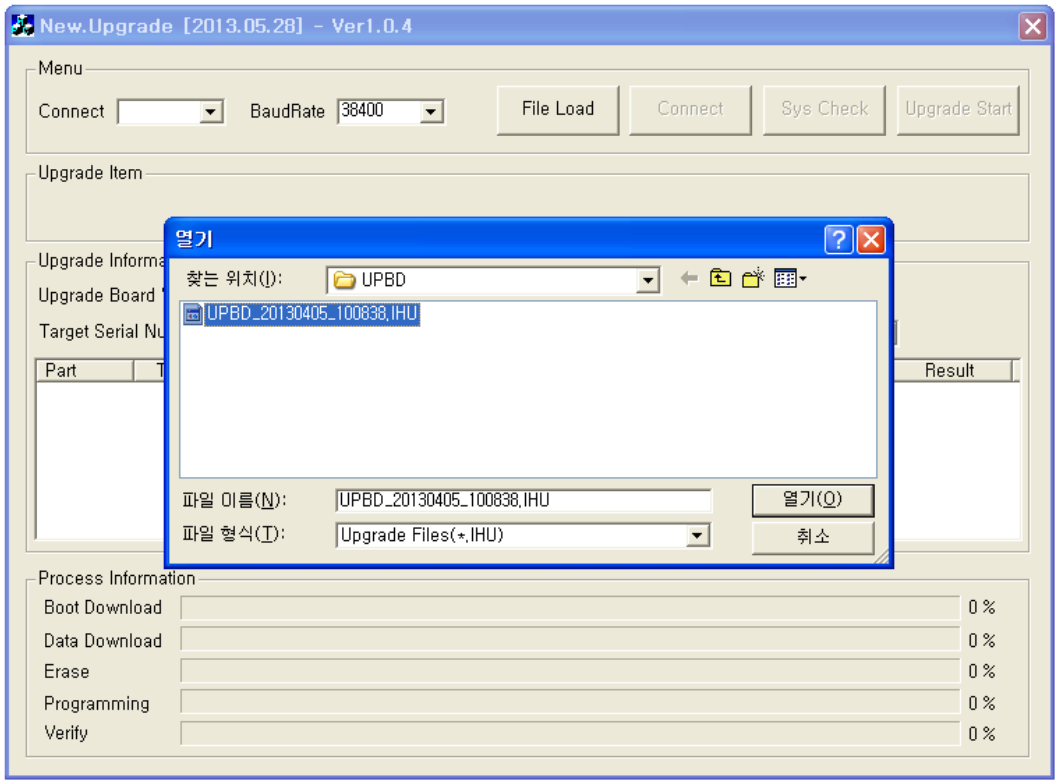

9.If the loaded file is for upgrading Upgrade Board, Connect type is activated as COM.

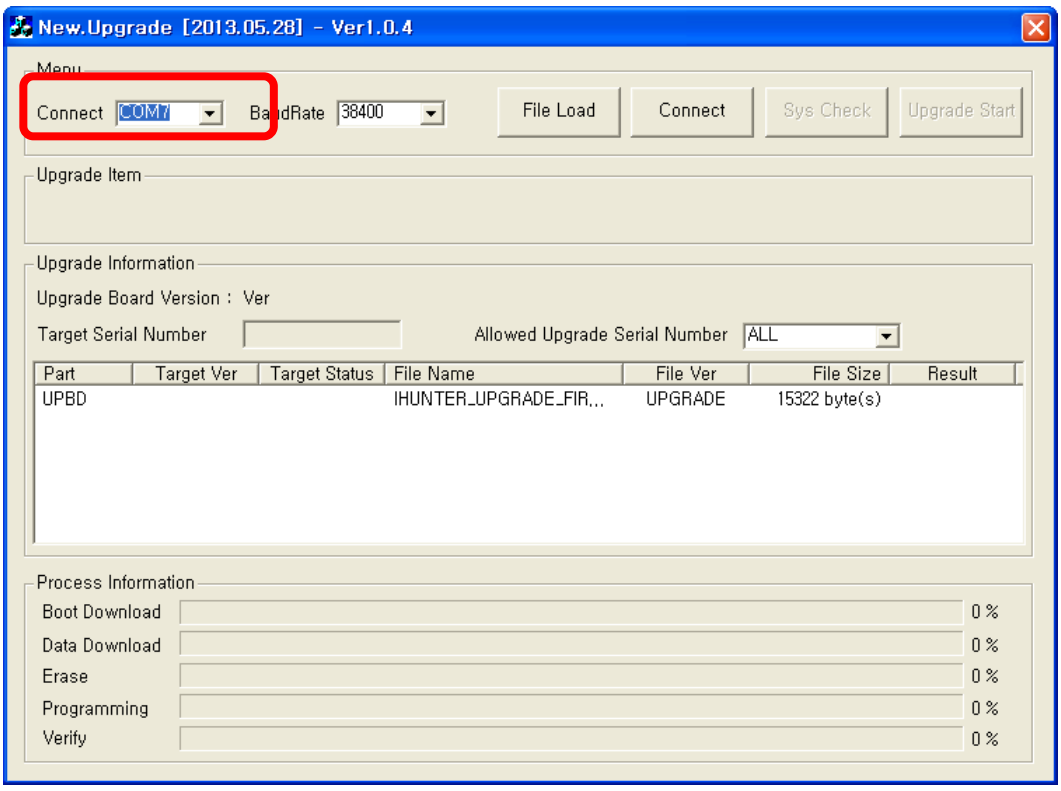

10. Check Comport which USB to Serial Cable (9 pin) is connected from Device Manager.

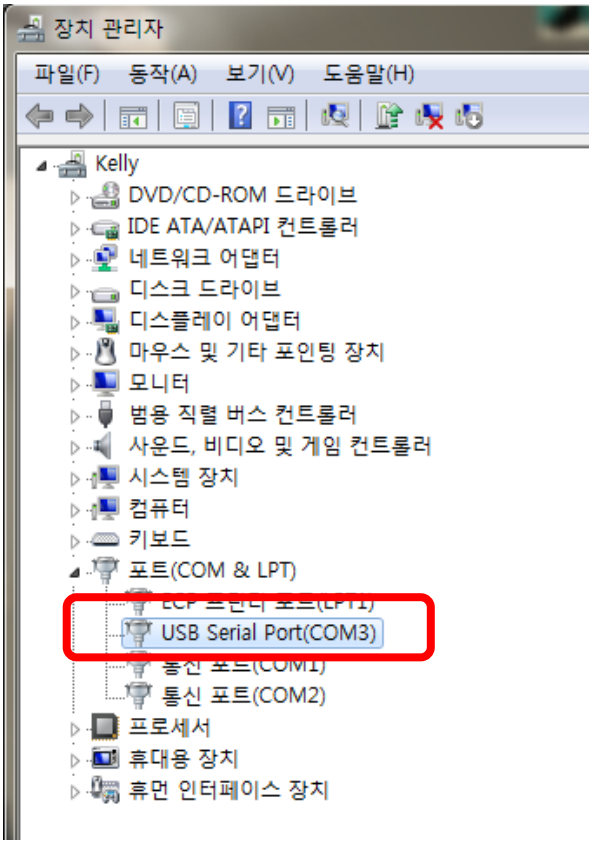

11. Select Comport and adjust Baud Rate is **38400**.

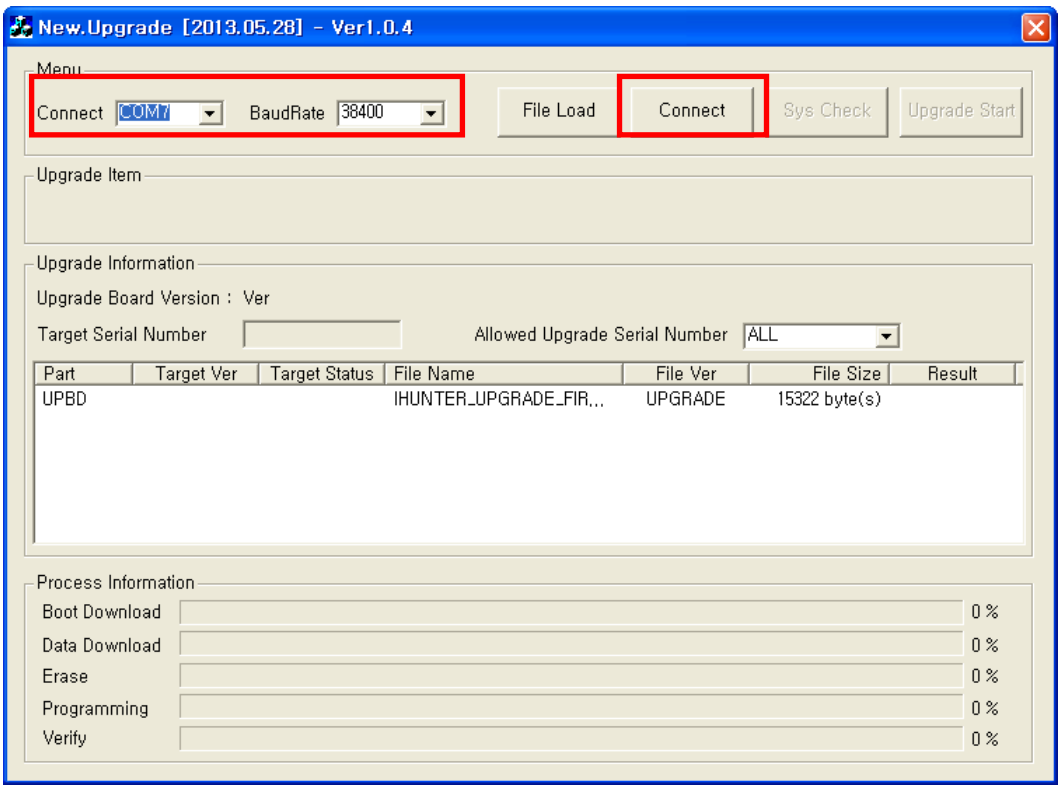

12. Click "Connect" button and Upgrade is started.

(Boot Download → Erase → Data Download)

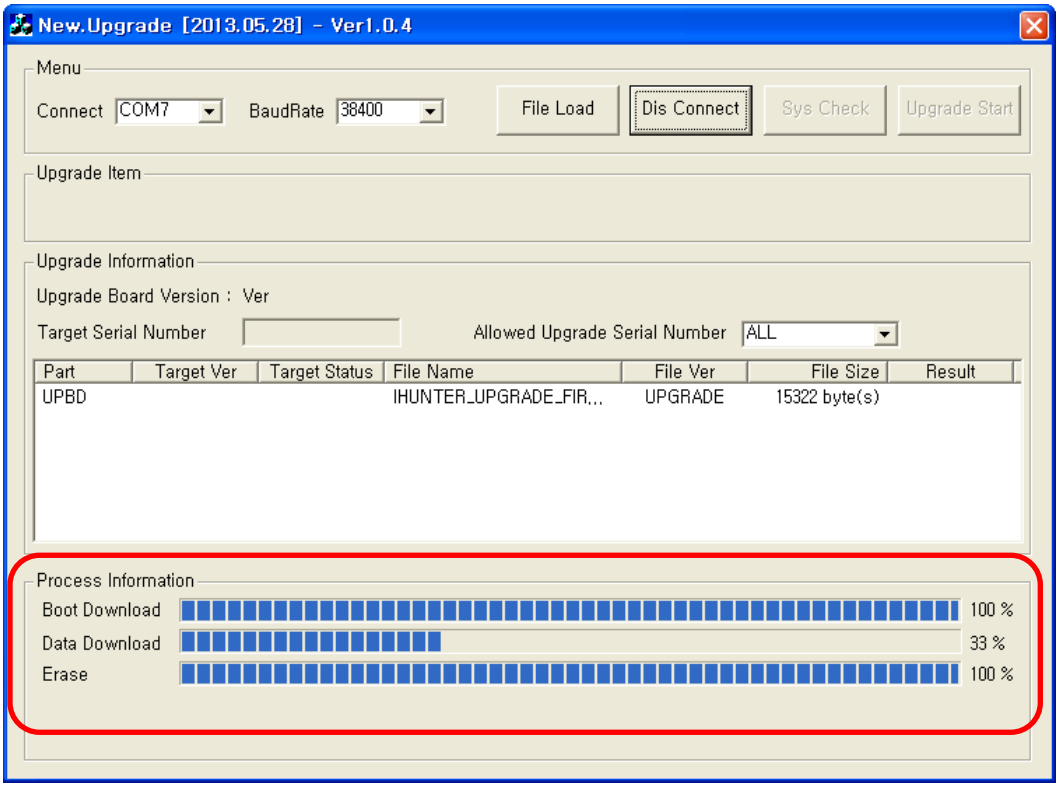

13. When Upgrade is finished, “Complete” message is shown as below.

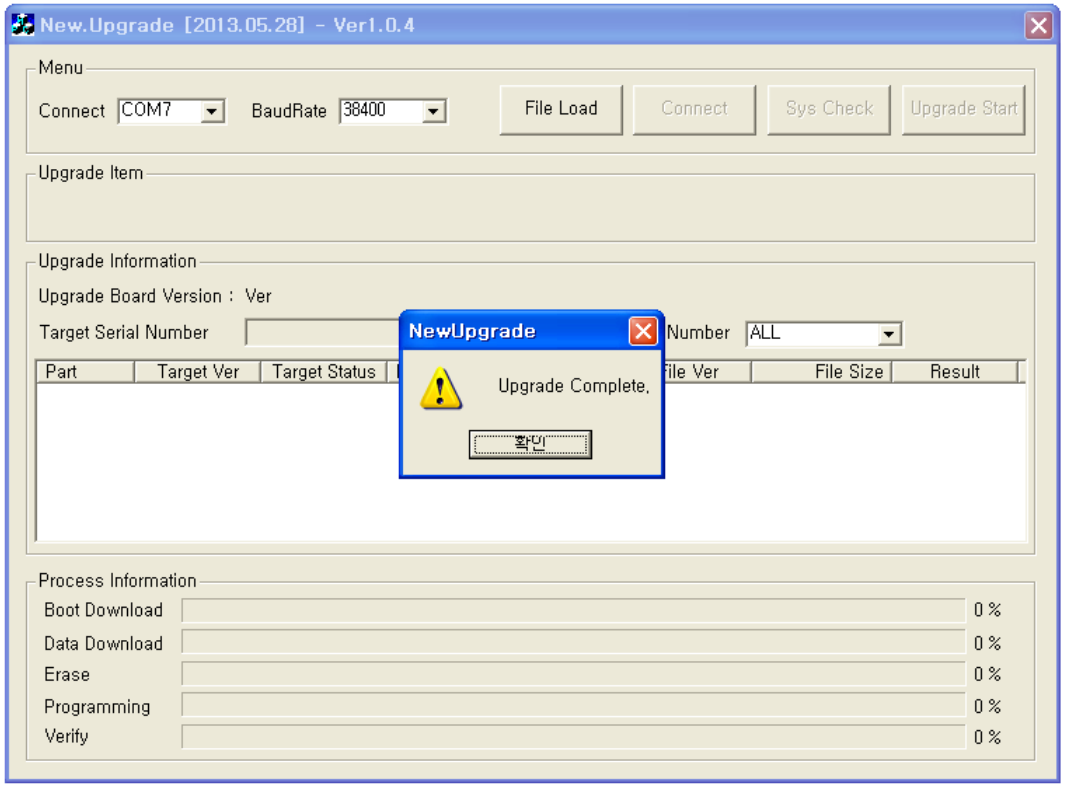

14. Turn off the power of Machine.

15. Change Pin arrangement again as below.

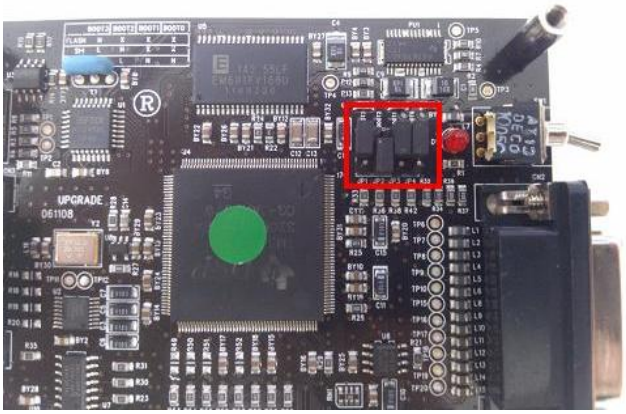

16. Assemble the upper plate to Upgrade Board

17. Remove all cables from Upgrade Board.

8-2-2. NEW UPGRADE INSTRUCTIONS

Before Upgrade

Prepare the updated Upgrade Board.

Install two kinds of USB Driver to your PC.

You can download the Driver from following link.

Download Click Here -> CP201X_Driver

Download Click Here -> USB2Serial_Driver

When you open the box of USB to Serial 9 pin cable, you can find a CD for USB Driver.

Because USB Driver is different from the manufacture of the cable, you have to install the enclosed Driver to your PC.

How To Upgrade the machine with CDM Board

1. Connect the machine to PC via Upgrade Board and cables as below

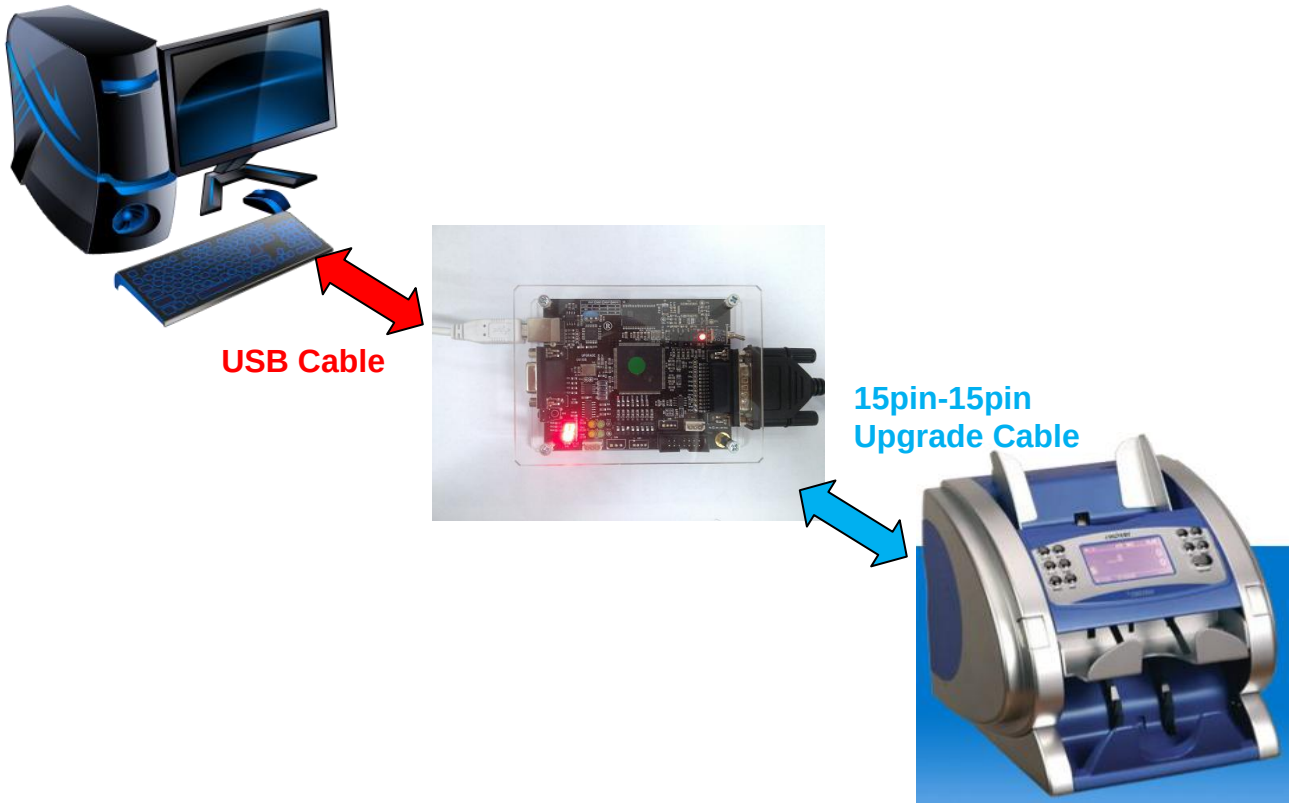

2. Execute New Upgrade Ver 1.0.x.

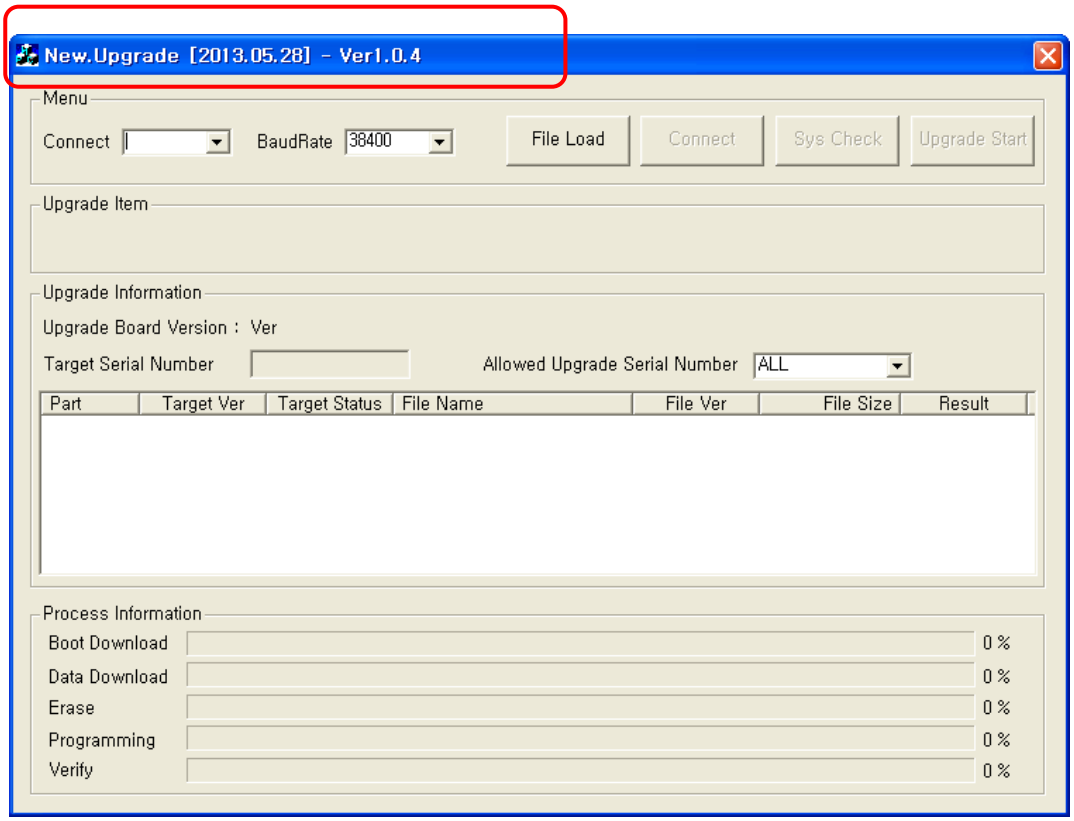

This is the new PC Upgrade program for iHUNTER and CDM iHUNTER.

With this program, you can upgrade old iHUNTER and CDM iHUNTER together.

But Upgrade Board must be updated.

Upgrade Software format for old iHUNTER is **DAT**.

Upgrade Software format for CDM iHUNTER is **IHU**.

IHU upgrade format can be available with old iHUNTER too.

We will changed the upgrade format for old iHUNTER to IHU later.

3. Load Upgrade Software, DAT or IHU type.

- IHU type

This is new upgrade software for and there are two kinds of IHU file.

1) For CIS1, CIS2 and CIS 4 Main Board

Upgrade_**U1**_XXXXXXXXXXXXXXXXXXXX.IHU

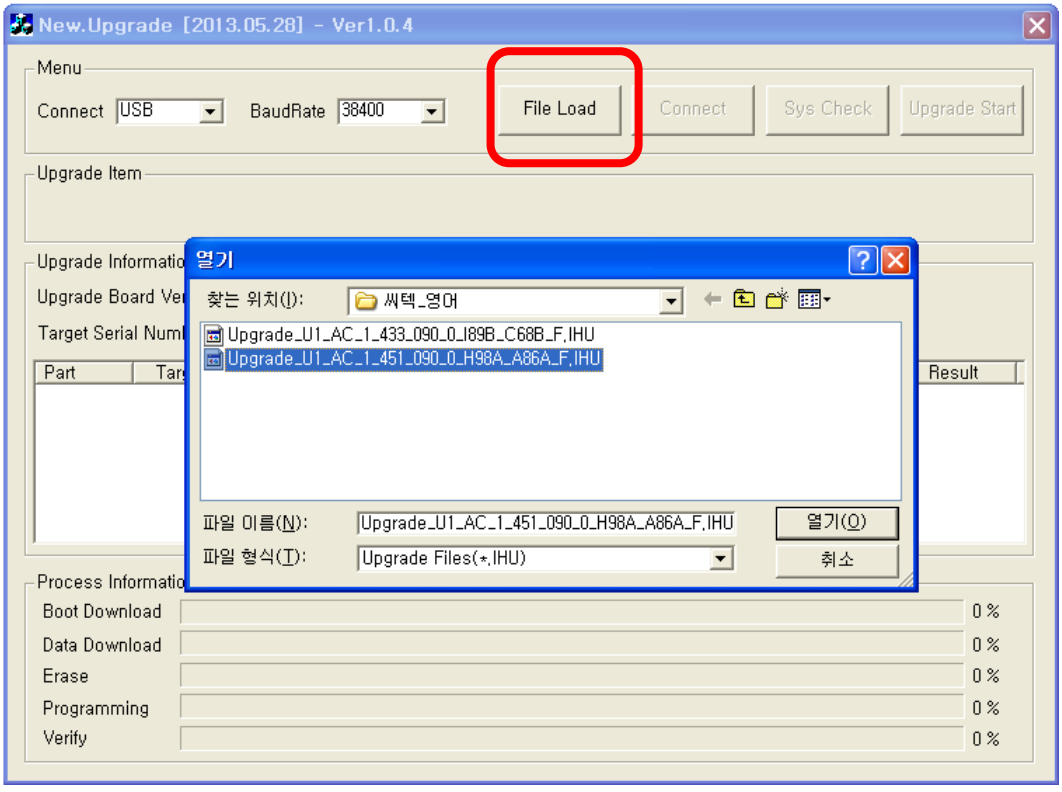

2) For CDM Board

Upgrade_U2_XXXXXXXXXXXXXXXXXXXX.IHU

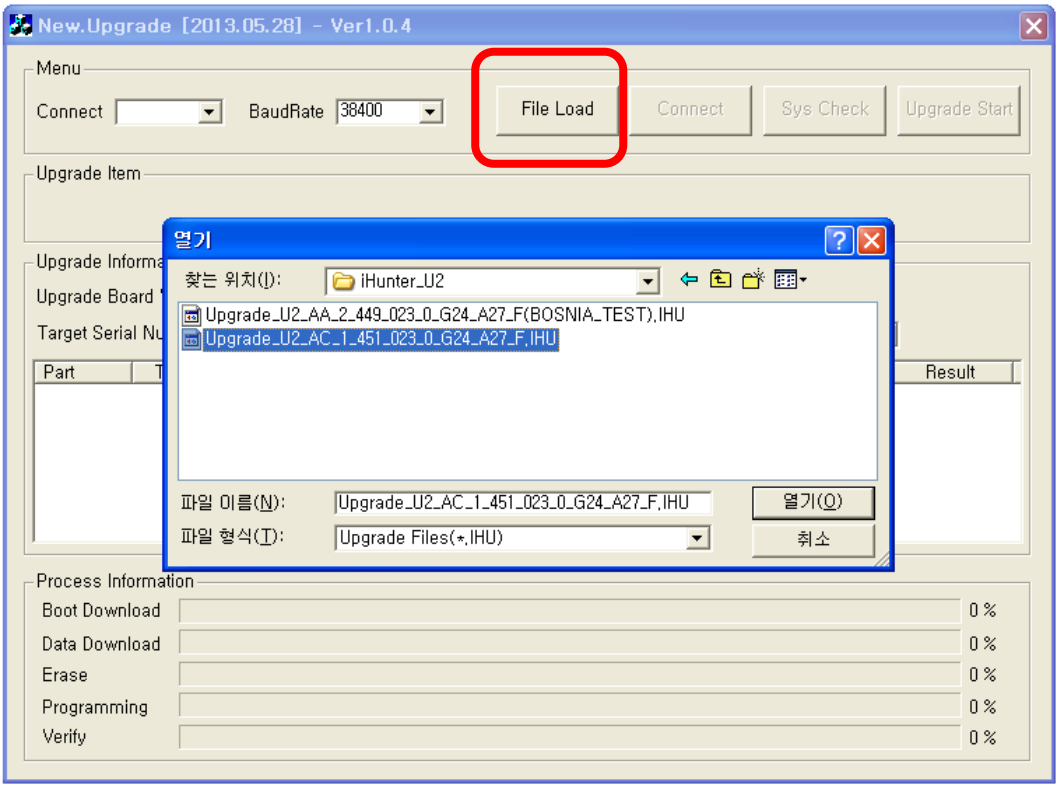

- DAT type

This is original upgrade software format of iHUNTER.

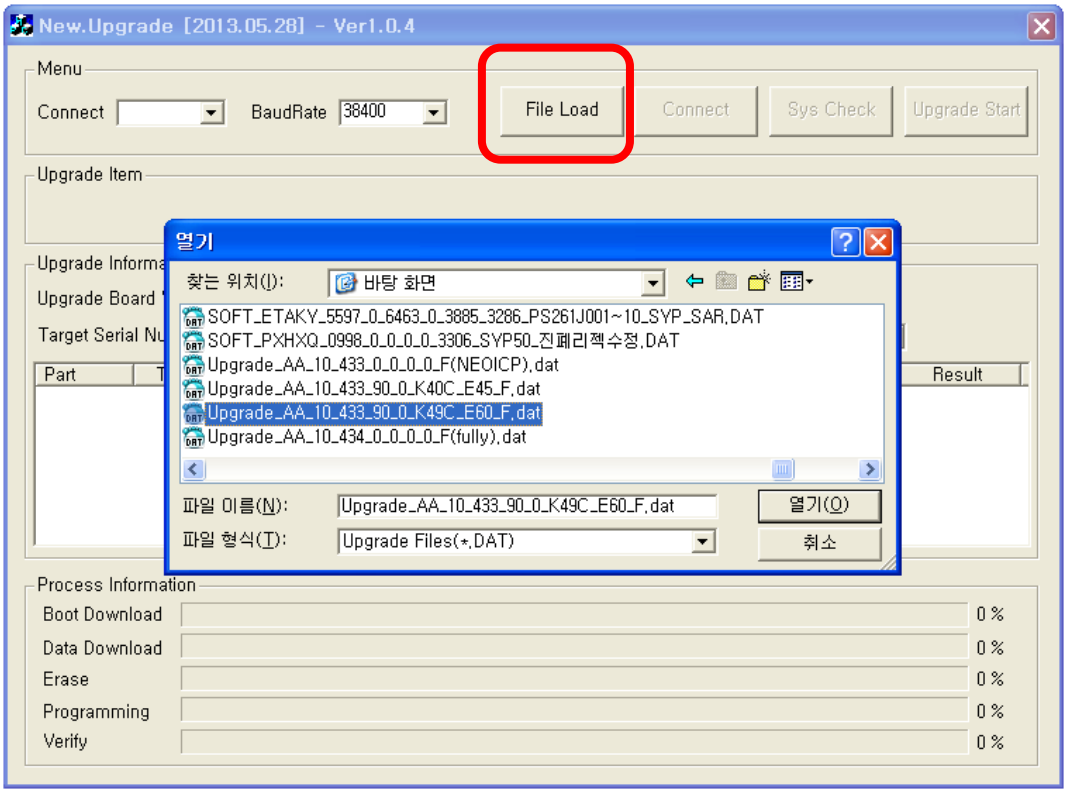

NOTE

In cause of DAT type software, Boot folder must be placed with NewUpgrade.exe together.

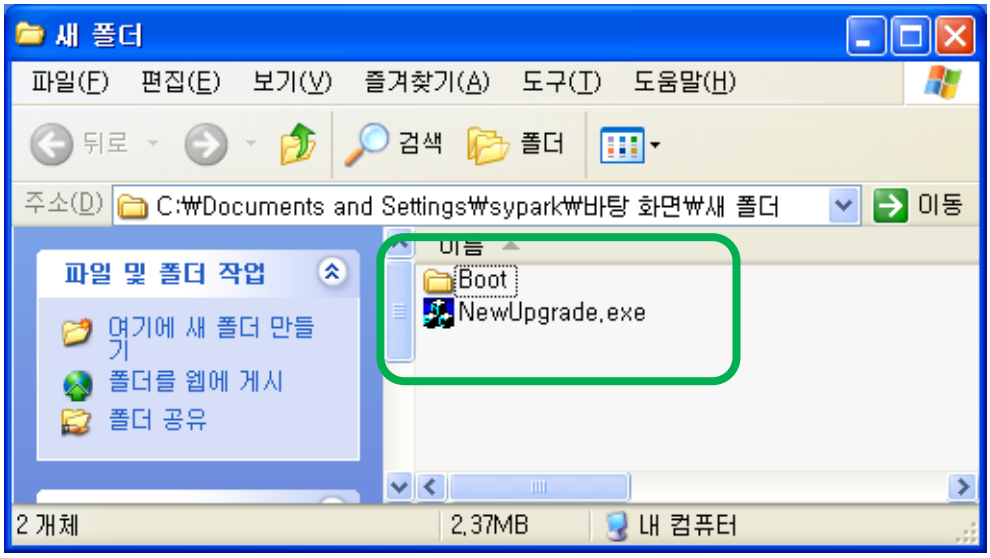

4. When the loaded file is for Upgrading iHUNTER or CDM iHUNTER, Connect type is changed to USB automatically.

- IHU type and DAT type for old iHUNTER

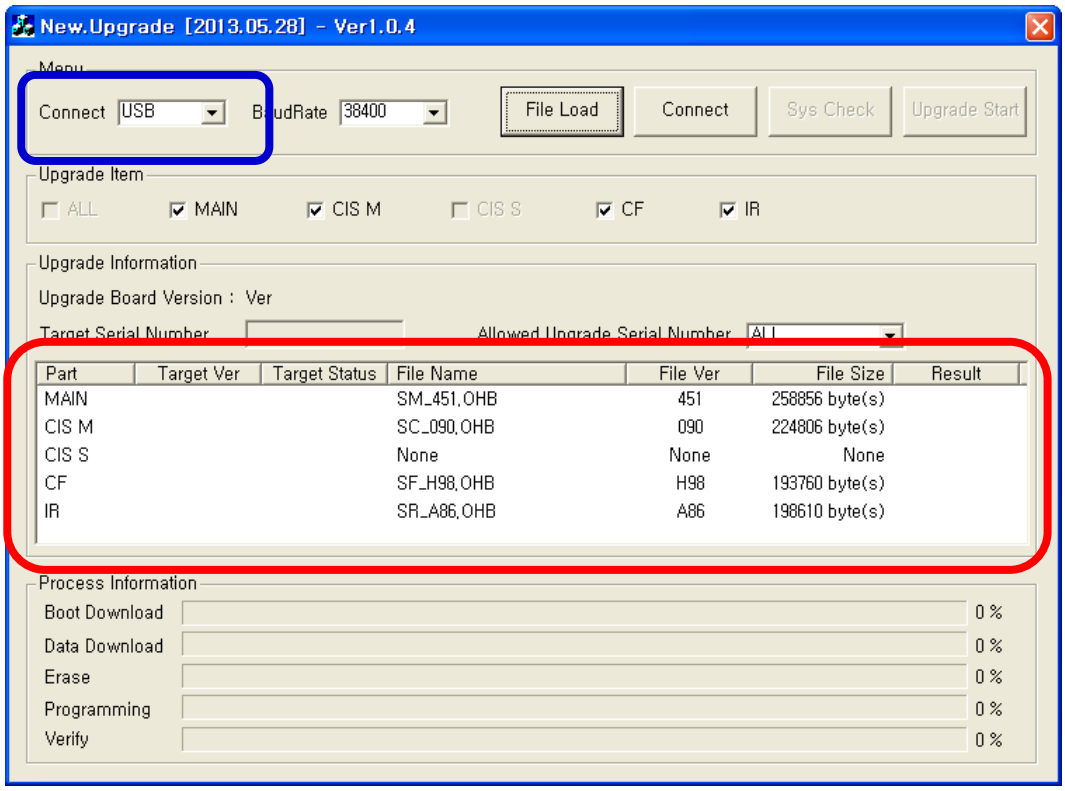

Main, CIS(Mater and Slave), CF and IR parts are existed.

- IHU type for CDM iHUNTER

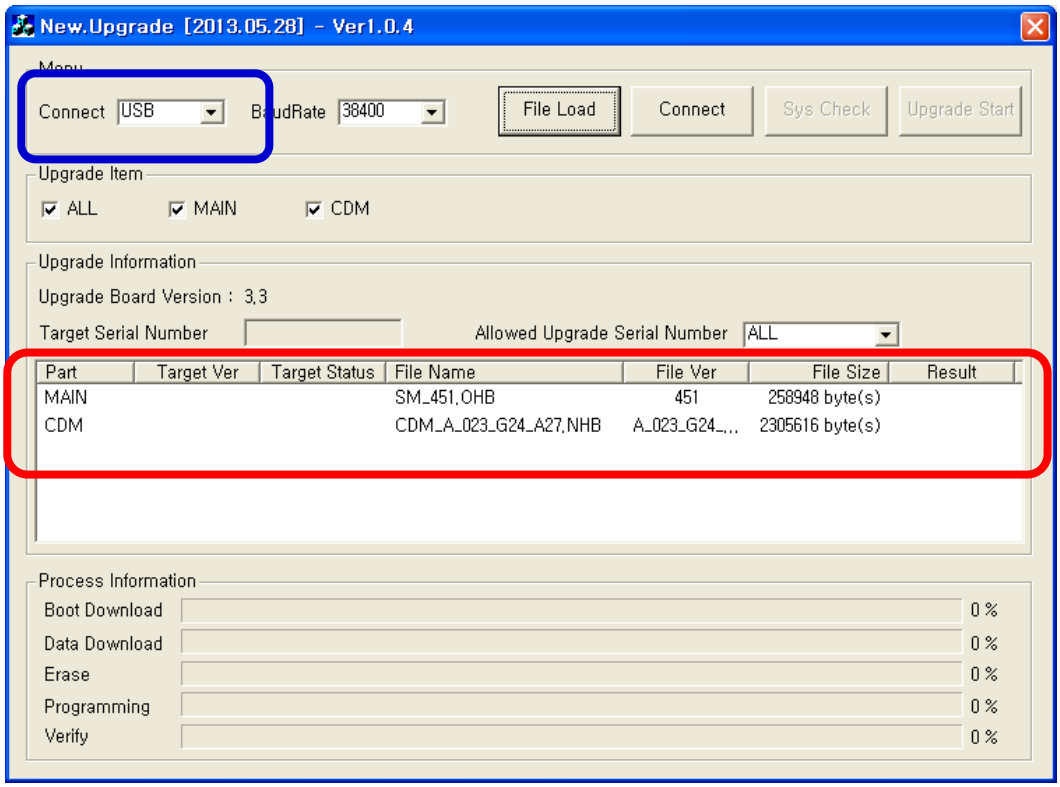

Only Main and CDM part are existed.

5. Click Sys Check.

Target Status for each part is shown and you can upgrade the parts with Active.

But we recommend you upgrade all parts.

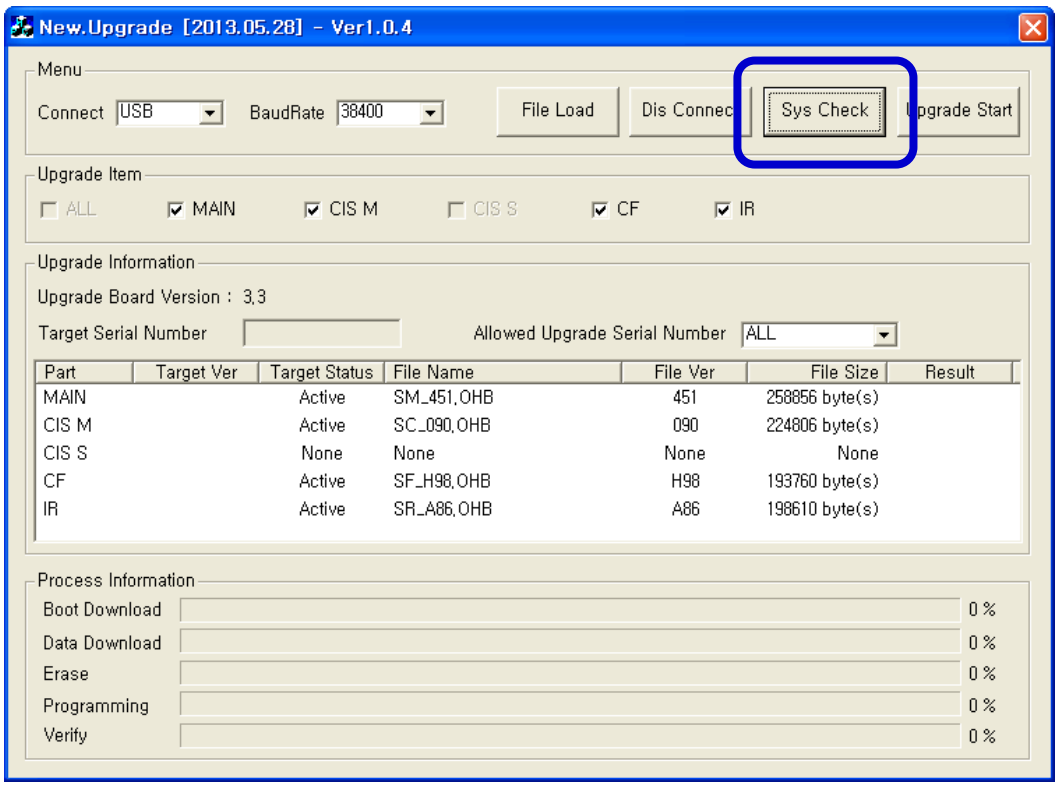

6. Click “Upgrade Start” Button and Upgrade is started.

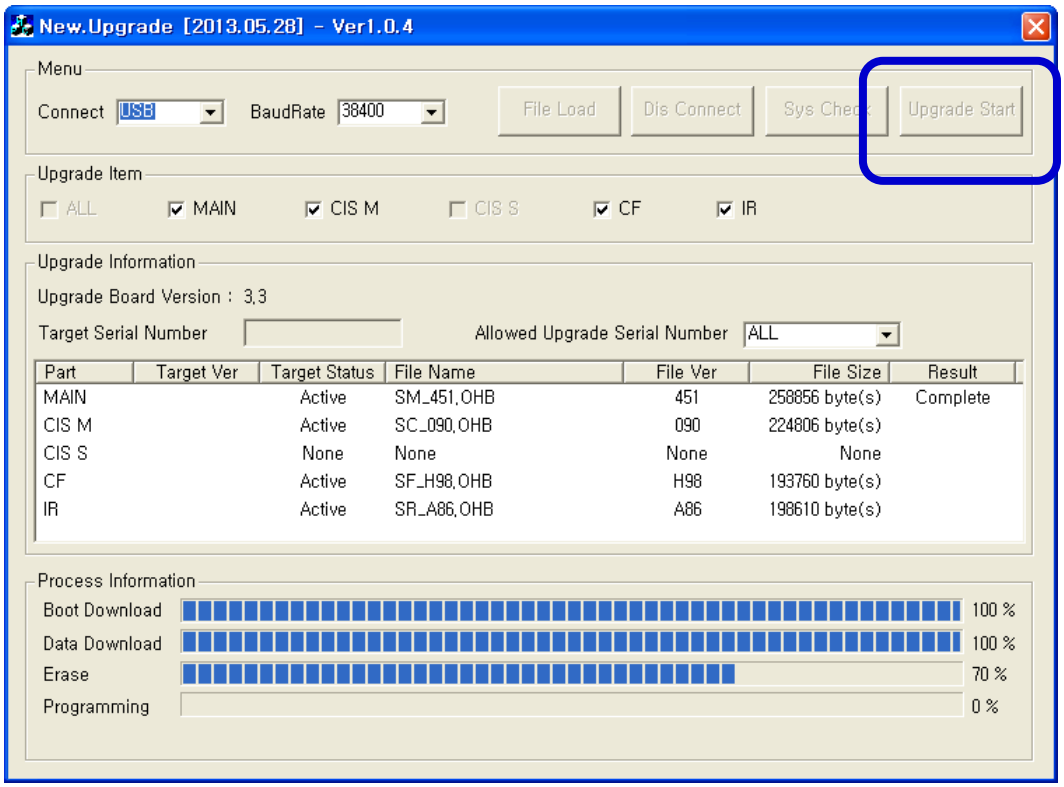

7. When upgrade is finished, “Complete” message is shown as below.

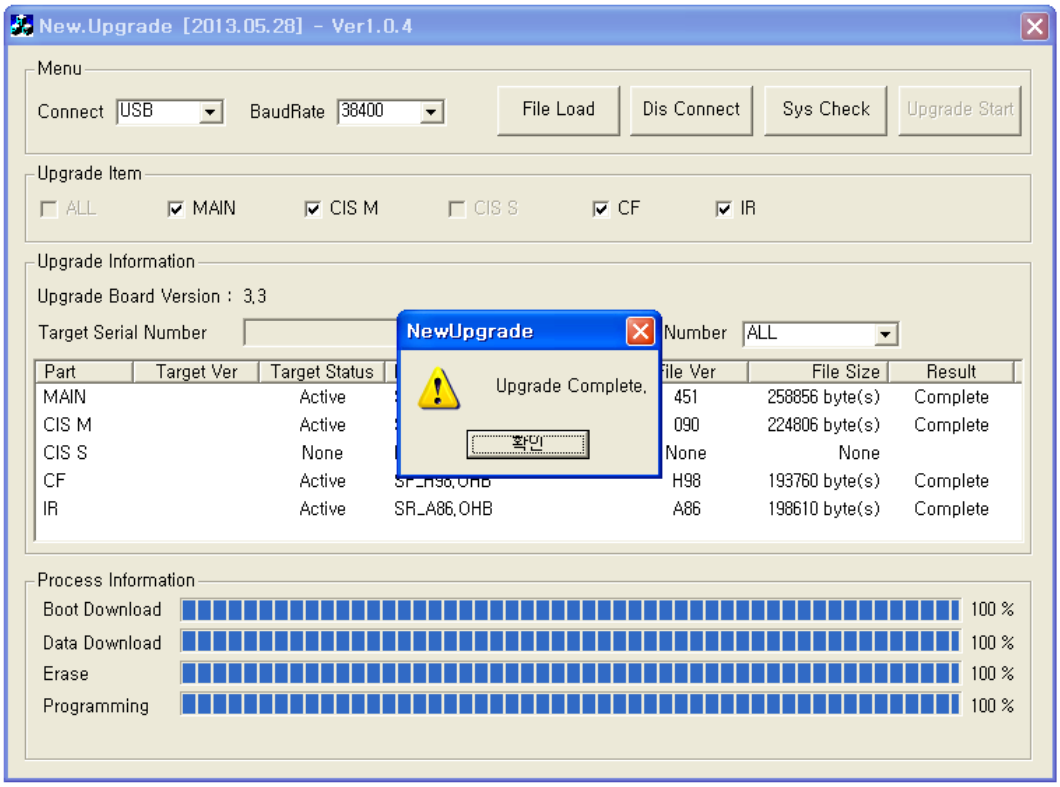

8. After finish the upgrade, try to calibrate all parts of the machine.

If you change or upgrade board(Main, CF, CIS...), you must set board instruction as below.

8-3. SETTING INSTRUCTION

8-3-1. MAIN BOARD SETTING

(1) Turn the power on.

(2) The machine show below message on the LCD DISPLAY.

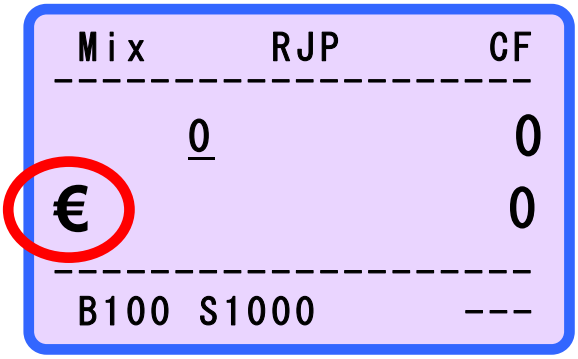

Any Operation Mode is available to calibrate the machine except standard counting Mode.

(3) Press and hold down the **RESTART** Key. The LCD DISPLAY shows as below.

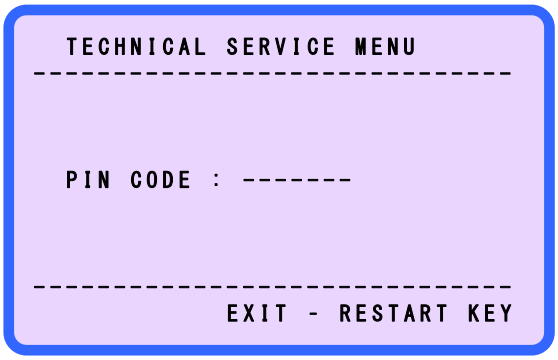

(4) Enter the PIN CODE,

Press and hold down **+10** → **CURRENCY** → Press and hold down **RESTART** → **CF** → **CURRENCY** → **MODE** → **PRINT**".

(5) Display shows as below.

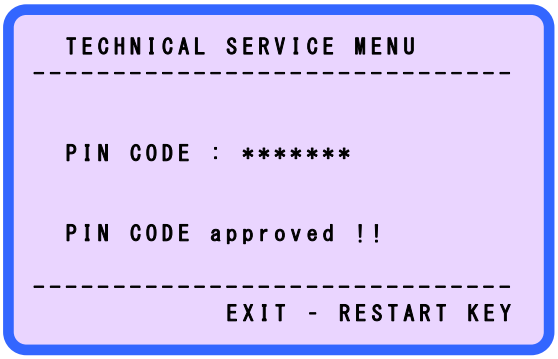

(6) To exit the TECHNICAL SERVICE MENU, press the **RESTART** key.

(7) Press and hold down the **RESTART** Key until the machine show below message on the LCD DISPLAY.

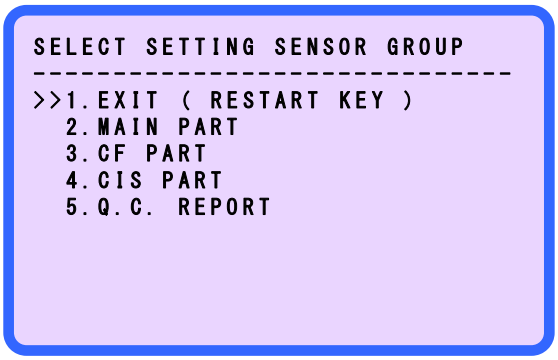

(8) Press the **MODE** Key until the machine show below message on the LCD DISPLAY.

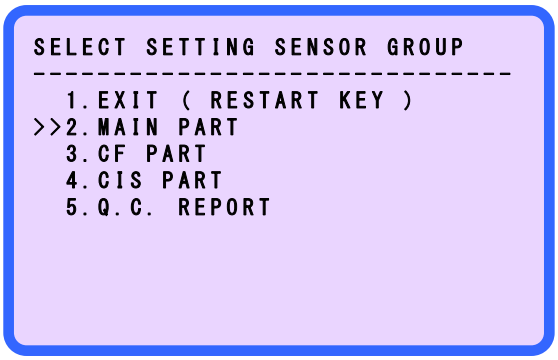

The item No. 2 is selected.

(9) Press the **MODE** key and select the item 2, 2. MAIN PART.

(10) Press the **PRINT** key and enter the item 2, 2. MAIN PART.

(11) Display shows as below.

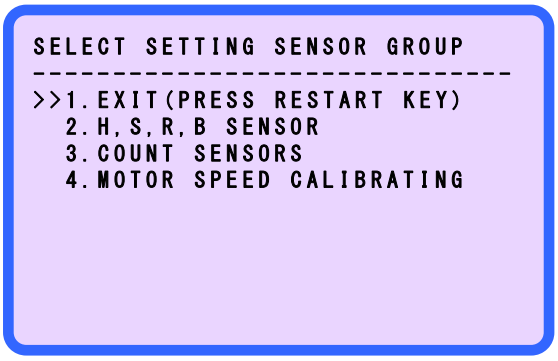

(12) Press **MODE** key and select the item3, 3. COUNT SENSORS.

(13) Press **PRINT** key and enter the item 3, 3. COUNT SENSORS.

(14) Display shows as below.

```
  COUNT SENSORS SETTING MODE

  >>EXIT<<   SAVE     LOAD
------------------------------
Sen-| Offsets |Set Value|Set-
Sors|  L   R  |  L   R  | ting
----+---------+---------+-----
Cis |4095,4095|x 40, 40x| X
Main|4095,4095|x 30, 30x| X
Rej.|4095,4095|x 20, 20x| X
------------------------------
```

(15) Press **MODE** key and select CIS sensor.

(16) Select the item as below.

```
  COUNT SENSORS SETTING MODE

    EXIT     SAVE     LOAD
------------------------------
Sen-| Offsets |Set Value|Set-
Sors|  L   R  |  L   R  | ting
----+---------+---------+-----
Cis |4095,4095|x 40, 40x| X <<
Main|4095,4095|x 30, 30x| X
Rej.|4095,4095|x 20, 20x| X
------------------------------
```

(17) Press **PRINT** key and set the count sensor it places front side of CIS sensor. After setting, display shows as below. It is possible the real setting value is different.

```
  COUNT SENSORS SETTING MODE

    EXIT     SAVE     LOAD
------------------------------
Sen-| Offsets |Set Value|Set-
Sors|  L   R  |  L   R  | ting
----+---------+---------+-----
Cis |4095,4095|x 53, 35x| 0 <<
Main|4095,4095|x 30, 30x| X
Rej.|4095,4095|x 20, 20x| X
------------------------------
```

(18) Press **MODE** key and select Rej. Sensor. Display shows as below.

```
  COUNT SENSORS SETTING MODE

    EXIT     SAVE     LOAD
------------------------------
Sen-| Offsets |Set Value|Set-
Sors|  L   R  |  L   R  | ting
----+---------+---------+-----
Cis |4095,4095|x 53, 35x| 0
Main|4095,4095|x 30, 30x| X
Rej.|4095,4095|x 20, 20x| X <<
------------------------------
```

(19) Press **PRINT** key and set the count sensor it places the front side of the REJECT sensor. Display shows as below. It is possible the real setting value is different.

```
   COUNT SENSORS SETTING MODE

     EXIT      SAVE      LOAD
------------------------------
Sen-| Offsets  |Set Value|Set-
Sors|  L   R   |  L   R  | ting
----+---------+---------+-----
Cis |4095,4095|x 53, 35x| 0
Main|4095,4095|x 30, 30x| X
Rej.|4095,4095|x 16, 14x| 0 <<
------------------------------
```

(20) Press **MODE** key and select Main. Sensor. Display shows as below.

```
   COUNT SENSORS SETTING MODE

     EXIT      SAVE      LOAD
------------------------------
Sen-| Offsets  |Set Value|Set-
Sors|  L   R   |  L   R  | ting
----+---------+---------+-----
Cis |4095,4095|x 53, 35x| 0
Main|4095,4095|x 30, 30x| X <<
Rej.|4095,4095|x 16, 14x| 0
------------------------------
```

(21) Insert the calibration card for count sensor to the machine.

Calibration Cards for Count Sensor.

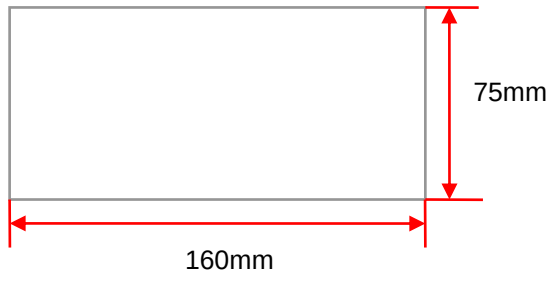

Put the calibration card on HOPPER.

Turn the KICKER ROLLER and insert the card until appear the display below.

Display shows as below.

```
   COUNT SENSORS SETTING MODE

     EXIT      SAVE      LOAD
------------------------------
Sen-| Offsets |Set Value|Set-
Sors|  L   R  |  L   R  | ting
----+---------+---------+-----
Cis |4095,4095|x 53, 35x| 0
Main|4095,4095|o 30, 30o| X <<
Rej.|4095,4095|x 16, 14x| 0
------------------------------
```

```
Cis |4095,4095|o 53, 35o| 0
Main|4095,4095|o 30, 30o| X <<
Rej.|4095,4095|x 16, 14x| 0

Cis |4095,4095|x 53, 35x| 0
Main|4095,4095|o 30, 30o| X <<
Rej.|4095,4095|x 16, 14x| 0
```

Insert the paper until the value change (**o -> x**)

(22) Press **PRINT** key and calibrate MAIN count sensor. After calibrating, display shows as below. It is possible the real setting value is different.

```
   COUNT SENSORS SETTING MODE

     EXIT      SAVE      LOAD
------------------------------
Sen-| Offsets |Set Value|Set-
Sors|  L   R  |  L   R  | ting
----+---------+---------+-----
Cis |4095,4095|x 53, 35x| 0
Main|4095,4095|o 32, 45o| 0 <<
Rej.|4095,4095|x 16, 14x| 0
------------------------------
```

(23) Remove the calibration card for count sensor from the machine turning the roller.

(24) Press **MODE** Key and select save menu.

```
   COUNT SENSORS SETTING MODE

     EXIT    >>SAVE<<    LOAD
------------------------------
Sen-| Offsets |Set Value|Set-
Sors|  L   R  |  L   R  | ting
----+---------+---------+-----
Cis |4095,4095|x 53, 35x| 0
Main|4095,4095|x 30, 30x| 0 <<
Rej.|4095,4095|x 16, 14x| 0
------------------------------
```

(25) Press **PRINT** key and save the changed data.

(26) Press **RESTART** key and exit COUNT SENSORS SETTING MODE.

```
SELECT SETTING SENSOR GROUP
------------------------------
  1.EXIT(PRESS RESTART KEY)
  2.H,S,R,B SENSOR
  3.COUNT SENSORS
>>4.MOTOR SPEED CALIBRATING
```

(27) Press **PRINT** key and enter item4, 4. MOTOR SPEED CALIBRATING. Display shows as below.

```
   MOTOR SPEED SETTING MODE
------------------------------
  TS/M | CS/M |  MM  |  SM
------------------------------
   100 |    0 | xxxx | xxxx <<
   200 |    0 | xxxx | xxxx
   300 |    0 | xxxx | xxxx
   400 |    0 | xxxx | xxxx
   500 |    0 | xxxx | xxxx
------------------------------
  TEST |      |      |
```

(28) Press **ADD** key to find speed automatically. It takes about 2 minutes.

(29) During measuring the speed, display shows as below.

```
   MOTOR SPEED SETTING MODE
------------------------------
  TS/M | CS/M |  MM  |  SM
------------------------------
   100 |  xxx | xxxx | xxxx <<
   200 |  xxx | xxxx | xxxx
   300 |  xxx | xxxx | xxxx
   400 |  xxx | xxxx | xxxx
   500 |  xxx | xxxx | xxxx
------------------------------
  TEST |      |      |
```

```
   MOTOR SPEED SETTING MODE
-----------------------------
  TS/M | CS/M |  MM  |  SM
-----------------------------
   600 |  xxx | xxxx | xxxx <<
   700 |  xxx | xxxx | xxxx
   800 |  xxx | xxxx | xxxx
   900 |  xxx | xxxx | xxxx
  1000 | xxxx | xxxx | xxxx
-----------------------------
  TEST |      |      |
```

```
   MOTOR SPEED SETTING MODE
-----------------------------
  TS/M | CS/M |  MM  |  SM
-----------------------------
  1100 | xxxx | xxxx | xxxx <<
  1200 | xxxx | xxxx | xxxx
  1300 | xxxx | xxxx | xxxx
  1400 | xxxx | xxxx | xxxx
  1500 | xxxx | xxxx | xxxx
-----------------------------
  TEST |      |      |
```

(30) After measuring, display shows as below.

```
   MOTOR SPEED SETTING MODE
-----------------------------

  -------------------------
 |  EXIT         --> RESTART |
 |  SAVE v,pwm   -->  PRINT  |
 |  SAVE v only  -->   C F   |
  -------------------------

-----------------------------
  TEST | xxxx | xxxx |
```

(31) Press **PRINT** key and save the data, MOTOR PWM value and CHECK VALUE.

```
   MOTOR SPEED SETTING MODE
-----------------------------
  TS/M | CS/M |  MM  |  SM
-----------------------------
   100 |    0 | xxxx | xxxx <<
   200 |    0 | xxxx | xxxx
   300 |    0 | xxxx | xxxx
v  400 |    0 | xxxx | xxxx
   500 |    0 | xxxx | xxxx
-----------------------------
  TEST |      |      |
```

(32) Press **RESTART** key and finish the calibration for MAIN board.

(33) Turn off the machine.

(34) Tune on the machine again.

8-3-2. CF BOARD SETTING

CAUTION!

- **Check CF board software version of the technical service menu before cf board setting.**
- **At first, calibrate count sensor after change CF Front/Rear Sensor Board.** **(Refer to 9-3-1.MAIN BOARD SETTING)**

1. UV SETTING

(1) Turn the power on.

(2) The machine show below message on the LCD DISPLAY.

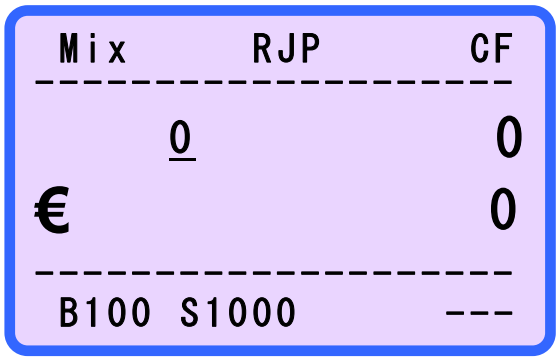

Any Currency Mode is available to calibrate the machine.

(3) Press and hold down the **RESTART** Key. The machine show below message on the LCD DISPLAY.

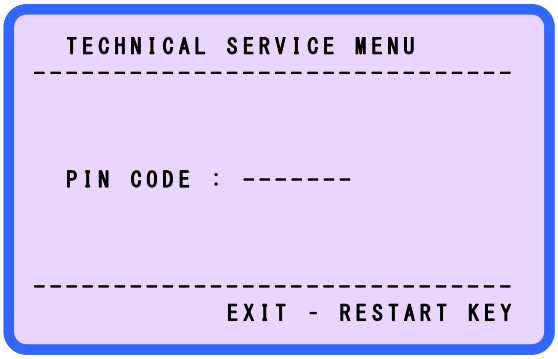

(4) Enter the PIN CODE,

Press and hold down **+10** → **CURRENCY** → Press and hold down **RESTART** → **CF** → **CURRENCY** → **MODE** → **PRINT**".

(5) Display shows as below.

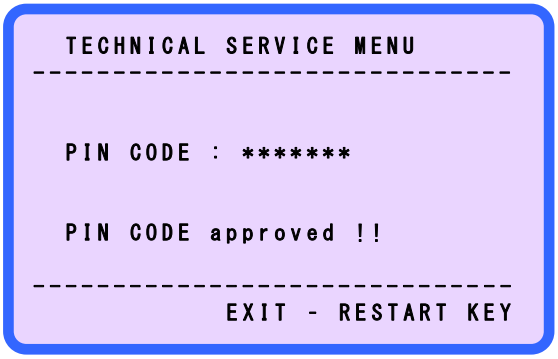

(6) If you want to exit the TECHNICAL SERVICE MENU, press the **RESTART** key.

(7) Press and hold down the **RESTART** Key until the machine show below message on the LCD DISPLAY.

```
SELECT SETTING SENSOR GROUP
-----------------------------
>>1.EXIT ( RESTART KEY )
  2.MAIN PART
  3.CF PART
  4.CIS PART
  5.Q.C. REPORT
```

(8) Press the **MODE** Key until the machine show below message on the LCD DISPLAY.

```
SELECT SETTING SENSOR GROUP
-----------------------------
  1.EXIT ( RESTART KEY )
  2.MAIN PART
>>3.CF PART
  4.CIS PART
  5.Q.C. REPORT
```

The item No. 3 is selected.

(14) Press the **MODE** key and select the item 3, 3. CF PART.

(15) Press the **PRINT** key and enter the item 3, 3. CF PART.

```
CF -> UV, MG

CURRENCY -> IR
```

Press the **CF** key and display shows as below.

```
SELECT SETTING CURRENCY
-----------------------------
  EXIT
>>1.EUROPEAN
  2.AMERICA
  3.SYRIA
  4.SOUTH AFRICA
  5.TURKEY
```

```
SELECT SETTING CURRENCY
-----------------------------
  EXIT
>>6.KOREA
  7.ISRAEL
  8.SAUDI ARABIA
  9.JAPAN
 10.PERU
 11.ENGLAND
 12.U.A.EMIRATES
```

(16) Press the **MODE** key and select the item 1, 1. EUROPEAN.

(17) Press the **PRINT** key and enter the item 1, 1. EUROPEAN.

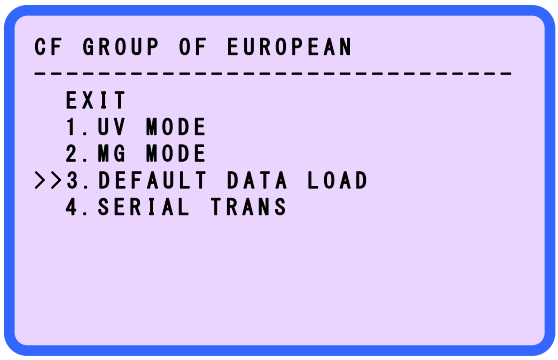

(18) Press the **MODE** key and select the item 3, 3.DEFAULT DATA LOAD.

(19) Press the **PRINT** key and select the item 3, 3.DEFAULT DATA LOAD.

(20) Press the **MODE** key and select the item 1, 1.UV MODE

(21) Press the **PRINT** key and select the item 1, 1.UV MODE

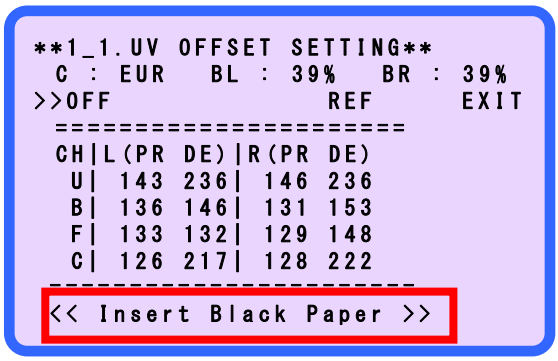

*** Prepare the Black setting paper as below.**

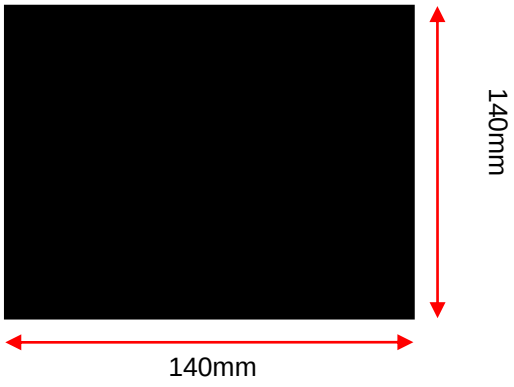

Put the Black setting paper on Hopper and press the **PRINT** key.

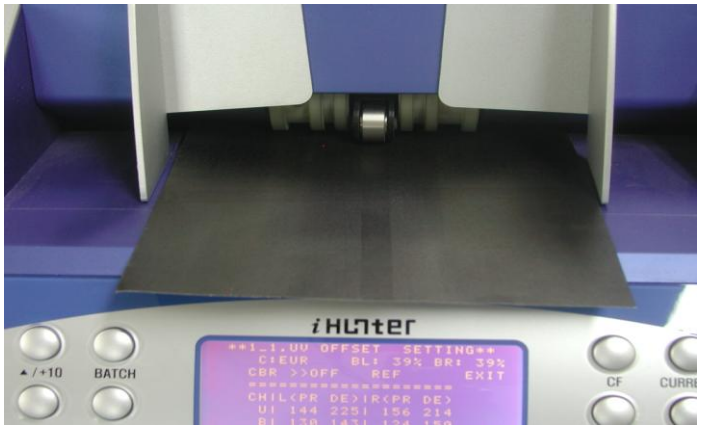

The Black setting paper feeds and starts calibration.

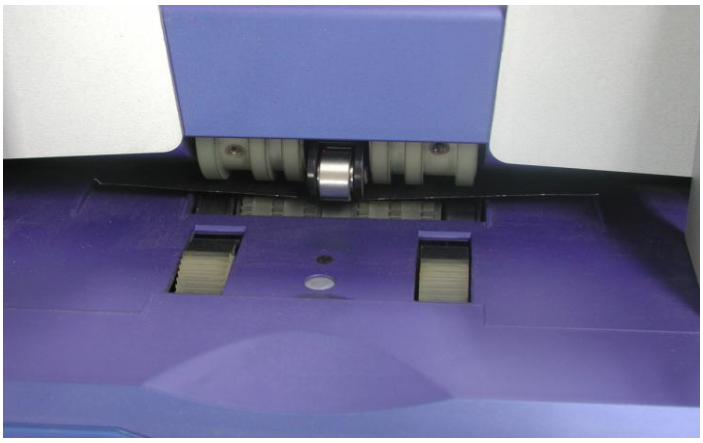

(22) Display shows as below.

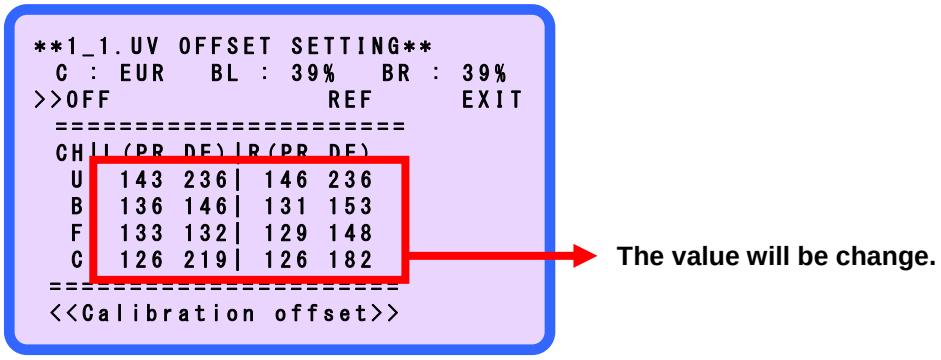

***After finishing calibration, the Black paper out the Main Pocket.**

(23)Press the **CURRENCY** key and enter the UV GAIN SETTING mode.

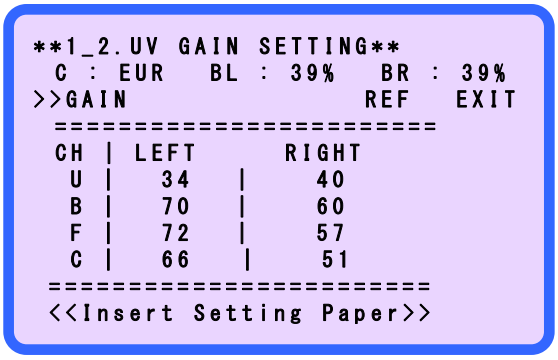

(24) Prepare the Blue setting paper as below.(10 sheets)

Be careful!! This is not same the paper of CF series.
Please use it separates certainly.

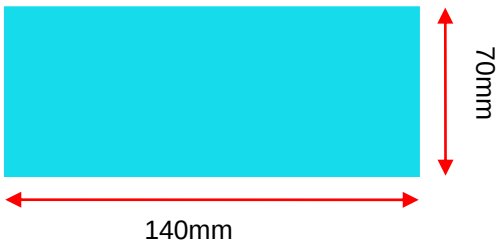

(25)Press the **PRINT** key and enter the UV GAIN DETAIL MODE.

```
**1_2.UV GAIN DETAIL MODE**
  C : EUR     Insert10 Paper
>>TUNE
   RMax     MEASURE     RMin
US)L: 36% > XXX%   >   34%
   R: 36% > XXX%   >   34%
BS)L: 36% > XXX%   >   34%
   R: 36% > XXX%   >   34%
FS)L: 26% > XXX%   >   24%
   R: 26% > XXX%   >   24%
 <<UV GAIN DETAIL ADJUST>>
```

(26)Put the Blue setting paper(10 sheets) on Hopper and press the **PRINT** key.

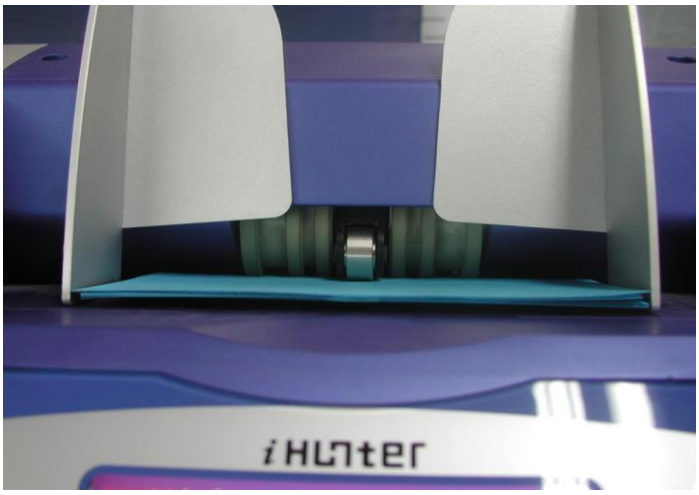

Repeat put the setting paper on the hopper 3~10 times.

```
**1_2.UV GAIN DETAIL MODE**
   C : EUR     Insert10 Paper
>>TUNE
   RMax     MEASURE     RMin
US)L: 36% > XXX%   >   34%
   R: 36% > XXX%   >   34%
BS)L: 36% > XXX%   >   34%
   R: 36% > XXX%   >   34%
FS)L: 26% > XXX%   >   24%
   R: 26% > XXX%   >   24%
 <<REPEAT DETAIL TUNE>>
```

(27)After finishing the calibration, display as below.

```
**1_2.UV GAIN DETAIL MODE**
    C : EUR     PN : 10
>>TUNE                    EXIT

============================

 <<UV SETTING COMPLETE!!>>


============================
```

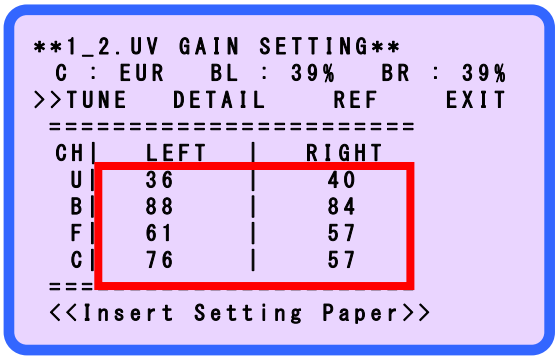

The value will be change.
This value should be over 15.

(28)Press the **RESTART** key and exit UV GAIN SETTING mode.

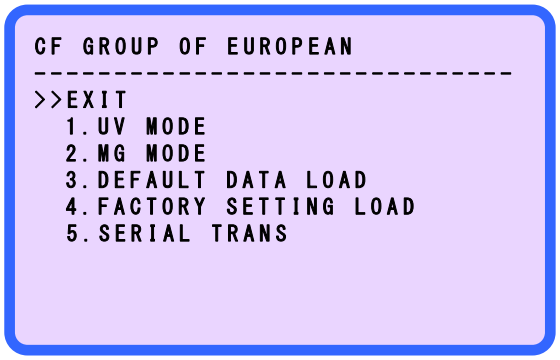

(29) Press the **RESTART** key and exit mode.

Display shows as below.

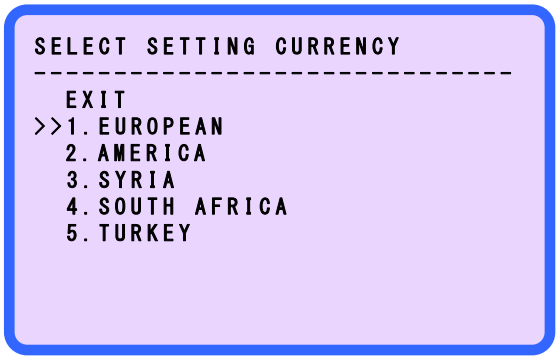

(30) Press the **MODE** key and select the item 2, 2. AMERICA

(31) Press the **PRINT** key and enter the item 2, 2. AMERICA

(32) Repeat the (18)~(29).

(33) Press the **RESTART** key and exit UV GAIN SETTING mode.

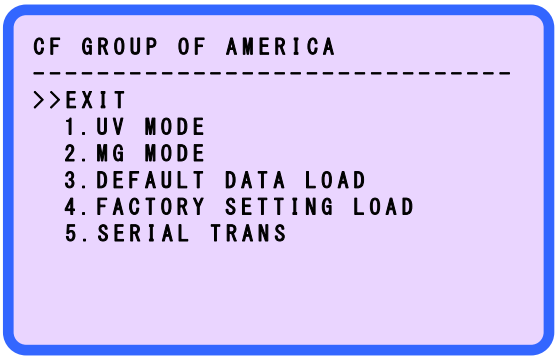

(34) Press the **RESTART** key and exit mode.
Display shows as below.

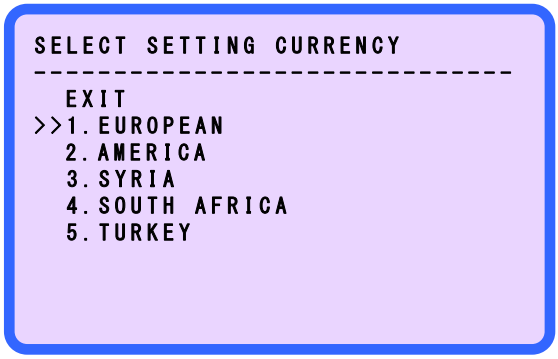

If the machine has another currency, you have to calibrate each currency.

(35) Press the **MODE** key and select the item 3~6.

(36) Press the **PRINT** key and enter the item 3~6.

(37) Repeat the (18)~(31).

(38) Press the **RESTART** key and exit UV GAIN SETTING mode.

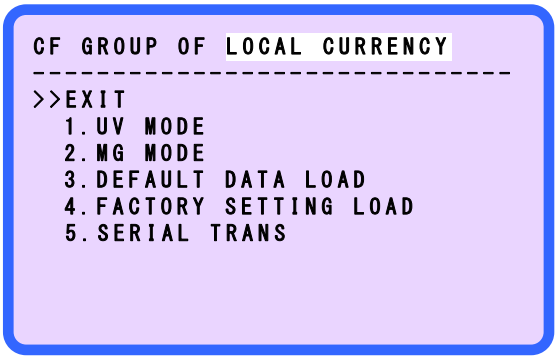

(39) Press the **RESTART** key and exit mode.

If all currencies finished calibration, press the **RESTART** key and exit mode.

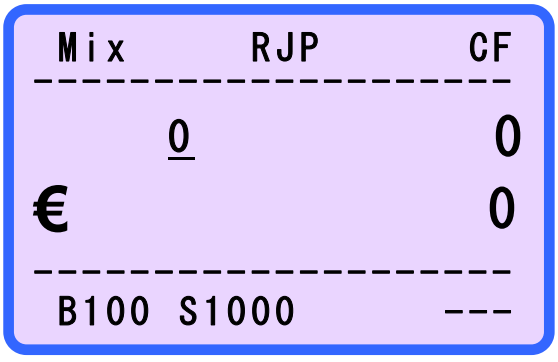

2. SELECT MG SENSOR

(1) Turn the power on.

(2) The machine show below message on the LCD DISPLAY.

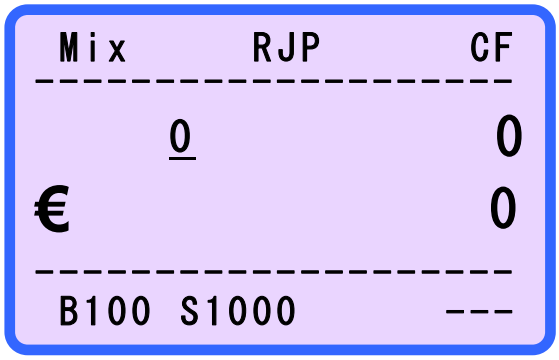

Any Currency Mode is available to calibrate the machine.

(3) Press and hold down the **RESTART** Key. The machine show below message on the LCD DISPLAY.

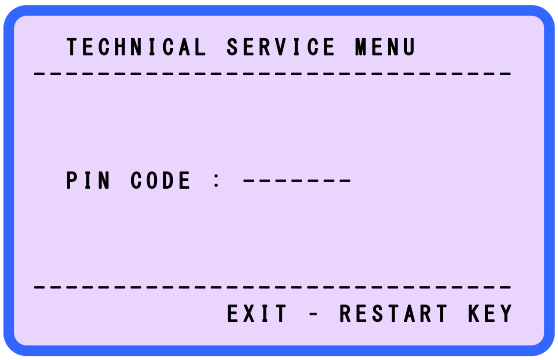

(4) Enter the PIN CODE,

Press and hold down **+10** → **CURRENCY** → Press and hold down **RESTART** → **CF** → **CURRENCY** → **MODE** → **PRINT**".

(5) Display shows as below.

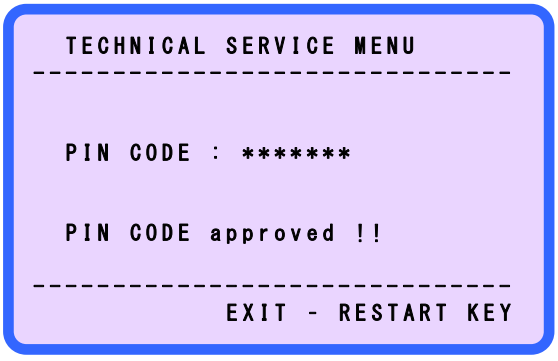

(6) If you want to exit the TECHNICAL SERVICE MENU, press the **RESTART** key.

(7) Press and hold down the **RESTART** Key until the machine show below message on the LCD DISPLAY.

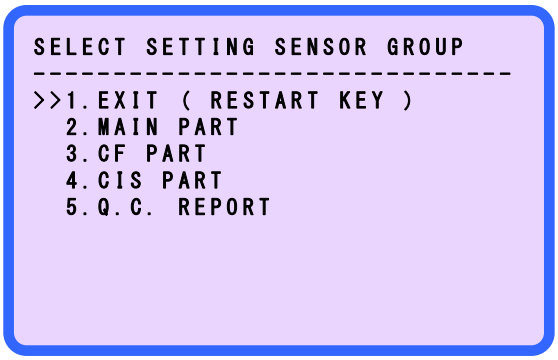

(8) Press the **MODE** Key until the machine show below message on the LCD DISPLAY.

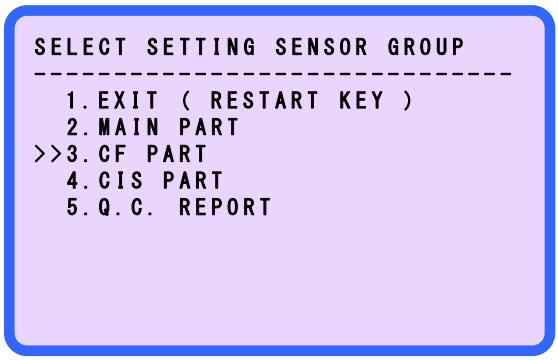

The item No. 3 is selected.

(9) Press the **MODE** key and select the item 3, 3. CF PART.

(10) Press the **PRINT** key and enter the item 3, 3. CF PART.

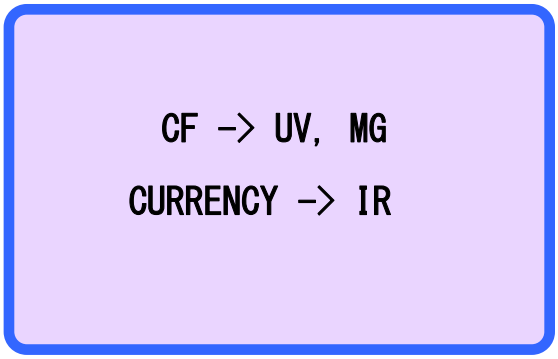

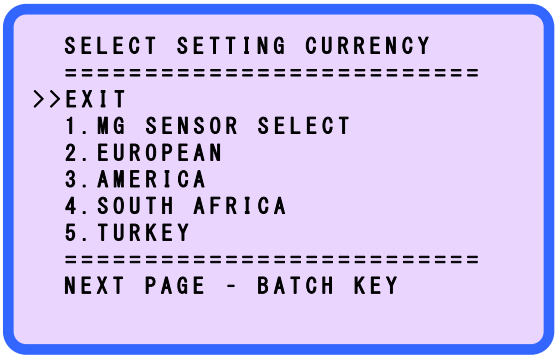

(11) Enter the item 1, 1. MG SENSOR SELECT.

(12) MG SELECT MODE screen is as below.

```
MG SELECT MODE
------------------------------
>>EXIT
  1.AUTO
  2.MANUAL
  3.SERIAL TRANS
```

(13) Go to 1. AUTO.

```
MG SELECT MODE
------------------------------
  EXIT
>>1.AUTO
  2.MANUAL
  3.SERIAL TRANS


<< Insert   Setting   Paper >>
```

(14) Put a 1$ banknote with **FF direction** on Hopper.

(15) Press PRINT KEY.

Note is counted automatically and check MG signals from MG Channels.

(16) When recognition is completed, following screen is shown.

```
MG SELECT MODE
------------------------------
  EXIT
>>1.AUTO
  2.MANUAL
  3.SERIAL TRANS
      CH1 CH2 CH3 CH4 CH5 CH6
START:  14  14  11  12  14  14
       STRAIGHT SENSOR
      SETTING   COMPLETE
```

```
MG SELECT MODE
------------------------------
  EXIT
>>1.AUTO
  2.MANUAL
  3.SERIAL TRANS
      CH1 CH2 CH3 CH4 CH5 CH6
START:  22   5  24   7  24  7
       ZIGZAG SENSOR
      SETTING   COMPLETE
```

(17) If “SETTING COMPLETE” message is not shown, please repeat step (19)~(21) again.

(18) When complete, exit MG SELECT MODE.

Notes!

Regarding change of MG sensor channel type

We would like to inform you that MG sensor channel type is changed.

The details are as below.

Inside structure of MG sensor which we used until now is as below.

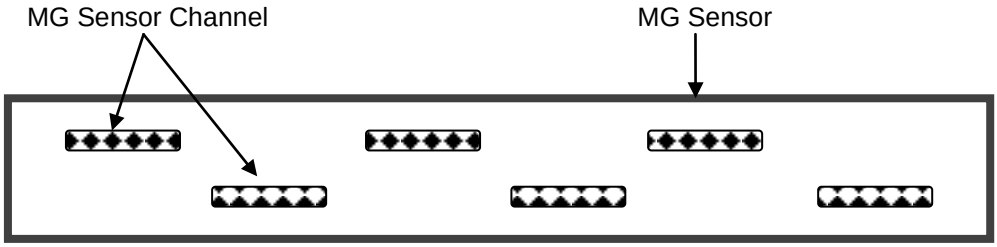

MG sensor channel is placed in zigzag.

Because of zigzag position, MG signal from 6 channels is weaker than others.

Weak MG signal makes M2 error with USD occasionally.

For remove weak point of MG sensor with zigzag position, we had contacted manufacture of MG sensor several times.

Finally we found the solution and changed MG sensor position from zigzag to straight.

New MG sensor inside structure is as below.

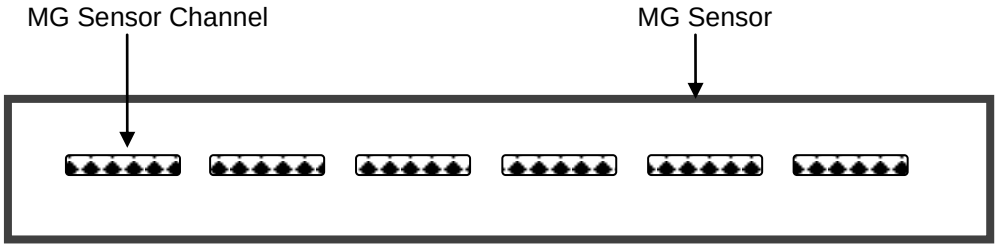

We received the sample MG sensor last December and completed the test with all local currencies which we developed.

And we also finished reliability test successfully.

By straight MG channel sensor, Magner150 can get the same size MG signal from all channels.

Please find following MG signal graph.

When count USD 100 (new version), the following MG signal is get from MG channels.

And next MG signal graph is from new MG sensor with straight channel position.

The signal is from the same note, USD100$ (new version)

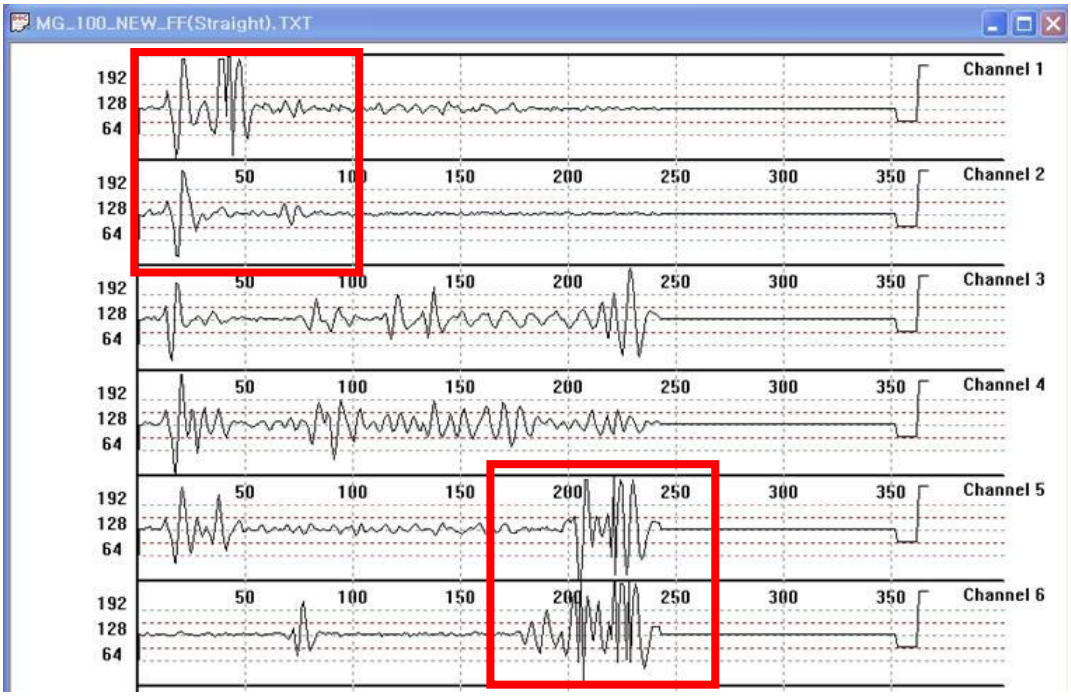

When you check red boxes of two signals, you can find new MG sensor is better than old.

We firmly believe customer will be satisfied with new MG sensor.

But Software modification was required.

Because there are two kinds of MG sensor type, machine must distinguish the MG signal from Zigzag type or Straight type.

So we made new menu in CF calibration Mode for distinguishing MR channel position.

3. CHECK MG SENSOR

(1) Turn the power on.

(2) The machine show below message on the LCD DISPLAY.

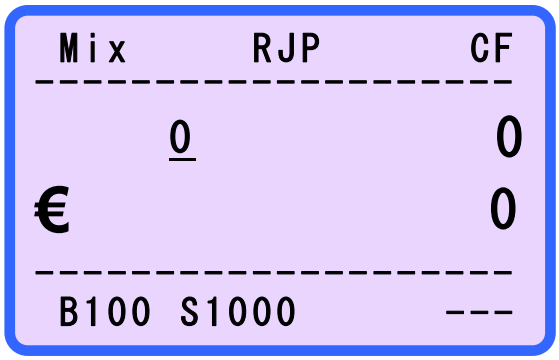

Any Currency Mode is available to calibrate the machine.

(3) Press and hold down the **RESTART** Key. The machine show below message on the LCD DISPLAY.

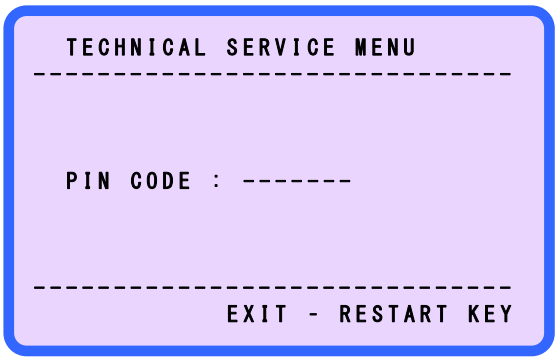

(4) Enter the PIN CODE,

Press and hold down **+10** → **CURRENCY** → Press and hold down **RESTART** → **CF** → **CURRENCY** → **MODE** → **PRINT**".

(5) Display shows as below.

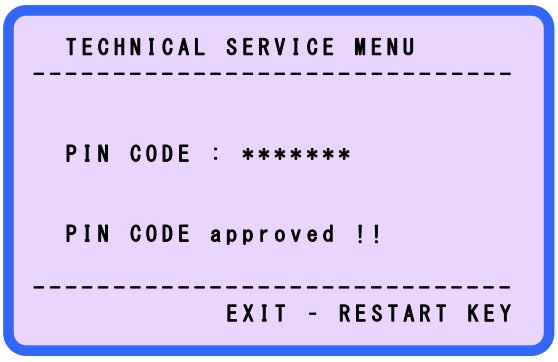

(6) If you want to exit the TECHNICAL SERVICE MENU, press the **RESTART** key.

(7) Press and hold down the **RESTART** Key until the machine show below message on the LCD DISPLAY.

```
SELECT SETTING SENSOR GROUP
-----------------------------
>>1.EXIT ( RESTART KEY )
  2.MAIN PART
  3.CF PART
  4.CIS PART
  5.Q.C. REPORT
```

(8) Press the **MODE** Key until the machine show below message on the LCD DISPLAY.

```
SELECT SETTING SENSOR GROUP
-----------------------------
  1.EXIT ( RESTART KEY )
  2.MAIN PART
>>3.CF PART
  4.CIS PART
  5.Q.C. REPORT
```

The item No. 3 is selected.

(14) Press the **MODE** key and select the item 3, 3. CF PART.

(15) Press the **PRINT** key and enter the item 3, 3. CF PART.

```
CF -> UV, MG

CURRENCY -> IR
```

Press the **CF** key and display shows as below.

```
SELECT SETTING CURRENCY
-----------------------------
  EXIT
>>1.EUROPEAN
  2.AMERICA
  3.SOUTH AFRICA
  4.SYRIA
```

(15) Press the **MODE** key and select the item 1, 1. EUROPEAN

(16) Press the **PRINT** key and enter the item 1, 1. EUROPEAN

Display shows as below.

```
CF GROUP OF EUROPEAN
----------------------------
>>EXIT
  1.UV MODE
  2.MG MODE
  3.DEFAULT DATA LOAD
  4.FACTORY SETTING LOAD
  5.SERIAL TRANS
```

(17) Press the **MODE** Key until the machine show below message on the LCD DISPLAY.

```
CF GROUP OF EUROPEAN
----------------------------
  EXIT
  1.UV MODE
>>2.MG MODE
  3.DEFAULT DATA LOAD
  4.FACTORY SETTING LOAD
  5.SERIAL TRANS
```

(18) Press the **MODE** key and select the item 2, 2.MG MODE.

(19) Press the **PRINT** key and select the item 2, 2.MG MODE.

```
    ** 2.MG TEST MODE **
  C:EUR    D: 5    Vers:OLD
>>TEST     THREAD      EXIT

    CH1 CH2 CH3 CH4 CH5 CH6
MIN:XXX XXX XXX XXX XXX XXX
MAX:XXX XXX XXX XXX XXX XXX

THREAD: 20
TOTAL : XXX-XXX
     << UV   TEST >>
```

(20) Put the USD $1 or $2 on Hopper and press the **PRINT** key.

```
    ** 2.MG TEST MODE **
  C:EUR    D: 5    Vers:OLD
>>TEST     THREAD      EXIT

    CH1 CH2 CH3 CH4 CH5 CH6
MIN:23   28  40   36   28   21
MAX:23   28  40   36   28   21

THREAD: 20
TOTAL : 176-176
     << UV   TEST >>
```

The value will be change.

8-3-3. IR BOARD SETTING

(1) Turn the power on.

(2) The machine show below message on the LCD DISPLAY.

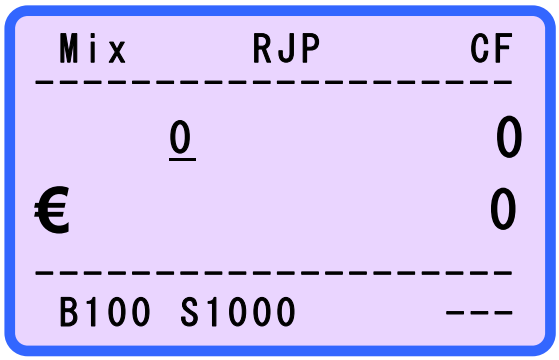

Any Currency Mode is available to calibrate the machine.

(3) Press and hold down the **RESTART** Key. The machine show below message on the LCD DISPLAY.

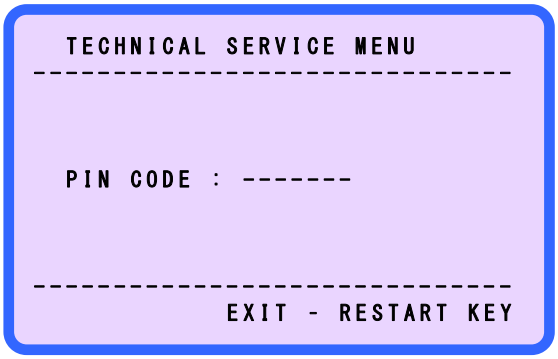

(4) Enter the PIN CODE,

Press and hold down **+10** → **CURRENCY** → Press and hold down **RESTART** → **CF** → **CURRENCY** → **MODE** → **PRINT**".

(5) Display shows as below.

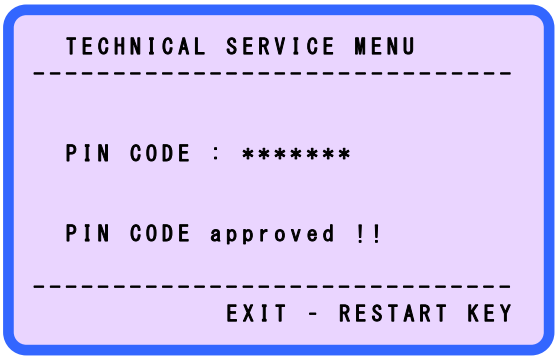

(6) If you want to exit the TECHNICAL SERVICE MENU, press the **RESTART** key.

(7) Press and hold down the **RESTART** Key until the machine show below message on the LCD DISPLAY.

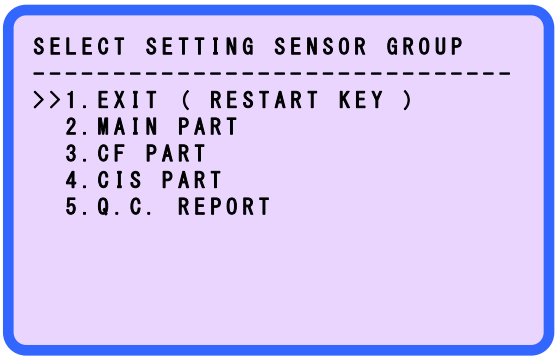

(8) Press the **MODE** Key until the machine show below message on the LCD DISPLAY.

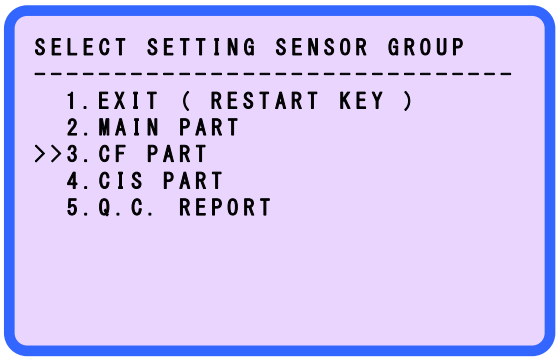

The item No. 3 is selected.

(14) Press the **MODE** key and select the item 3, 3. CF PART.

(15) Press the **PRINT** key and enter the item 3, 3. CF PART.

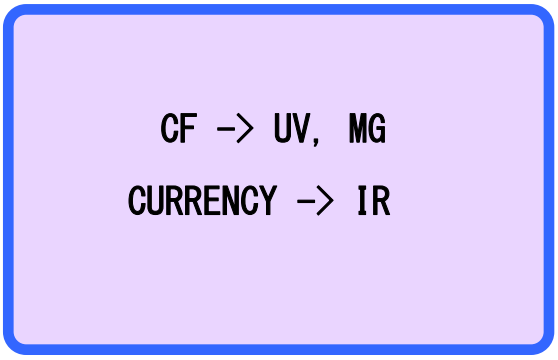

(16) Press the **CURRENCY** key and display shows as below.

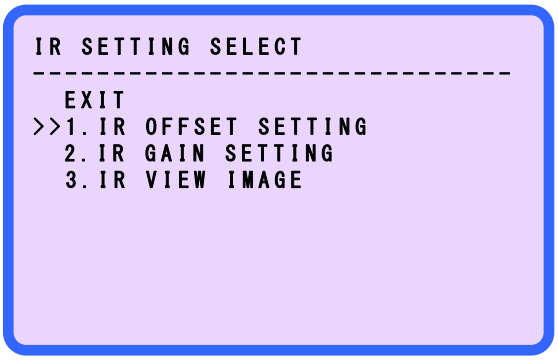

(17) Press the **MODE** key and select the item 1. IR OFFSET SETTING.

(18) Press the **PRINT** key and enter the item 1. IR OFFSET SETTING.

```
**1_1.IR OFFSET SETTING **
          DIR:F
>>OFF                    EXIT
CH1:255 255     CH9:255 255
CH2:255 255    CH10:255 255
CH3:255 255    CH11:255 255
CH4:255 255    CH12:255 255
CH5:255 255    CH13:255 255
CH6:255 255    CH14:255 255
CH7:255 255    CH15:255 255
CH8:255 255    CH16:255 255
```

(19) Prepare the Black setting paper as below.

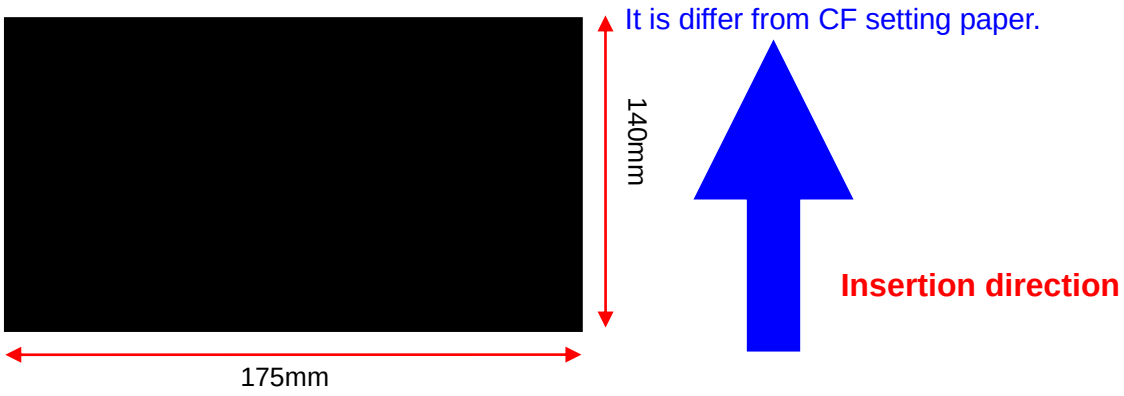

(20) Put the Black setting paper on Hopper and press the **PRINT** key.

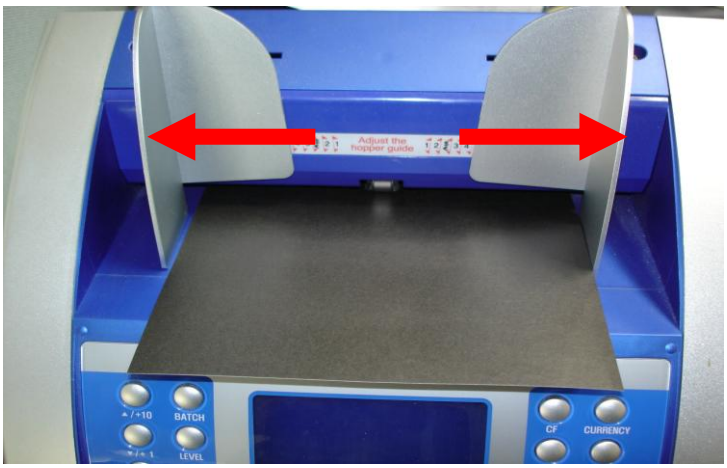

(21) The Black setting paper feeds and starts calibration.

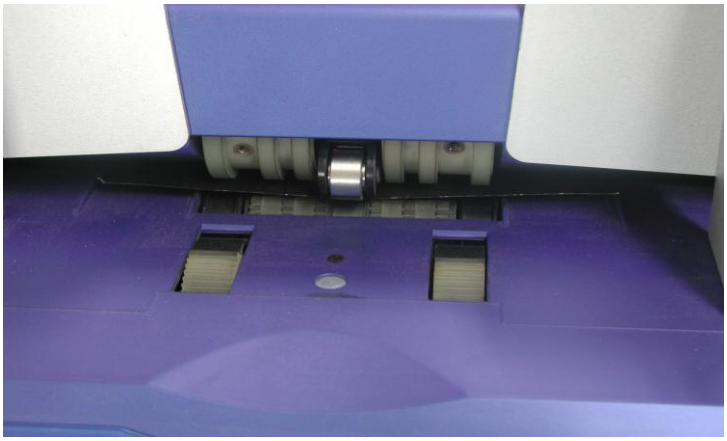

Display shows as below.

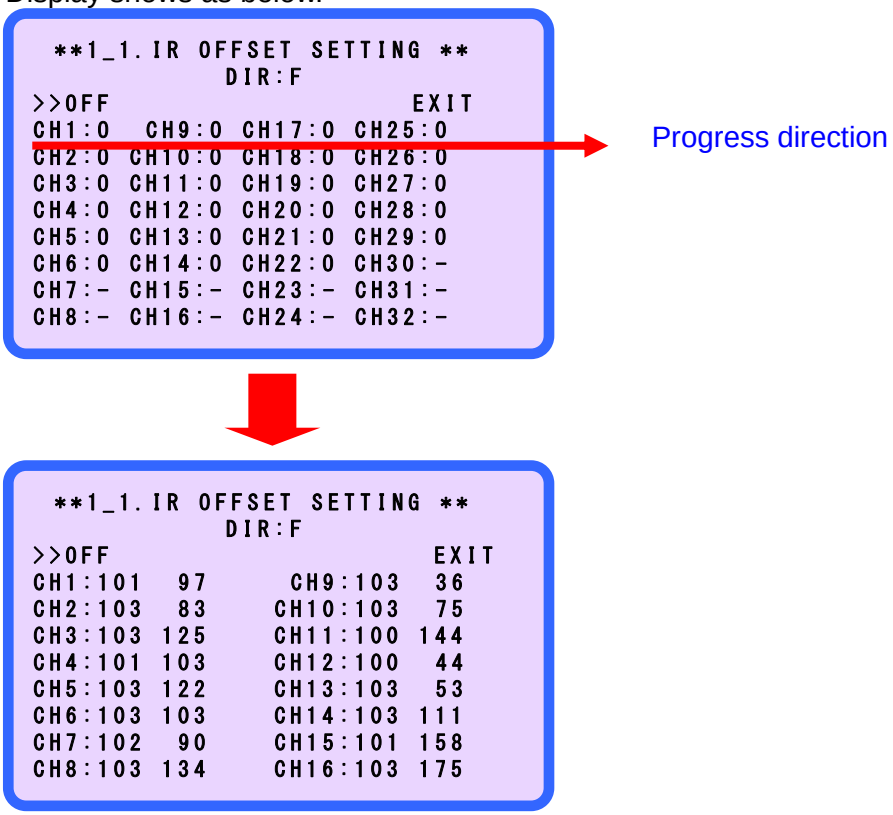

If the IR channel has a problem, “X” mark is shown.

```
CH1:0  CH9:X  CH17:0 CH25:0
CH2:0  CH10:X CH18:0 CH26:0
CH3:0  CH11:X CH19:0 CH27:0
CH4:0  CH12:X CH20:0 CH28:0
CH5:0  CH13:0 CH21:0 CH29:0
CH6:0  CH14:0 CH22:0 CH30:0
CH7:0  CH15:0 CH23:0 CH31:0
CH8:0  CH16:0 CH24:0 CH32:0
```

(22) Press **RESTART** Key or select the EXIT using **MODE** Key and exit IR OFFSET SETTING Mode.

(23) Press the **MODE** key and select the item 2. IR GAIN SETTING.

(24) Press the **PRINT** key and enter the item 2. IR GAIN SETTING.

- IR GAIN SETTING

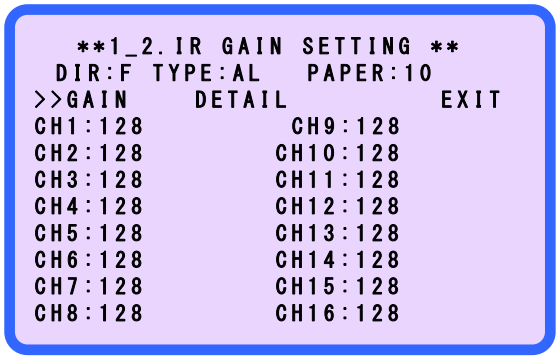

(25) Put the Blue setting paper on Hopper and press the **PRINT** key

(26) The Blue setting paper feeds and starts calibration.

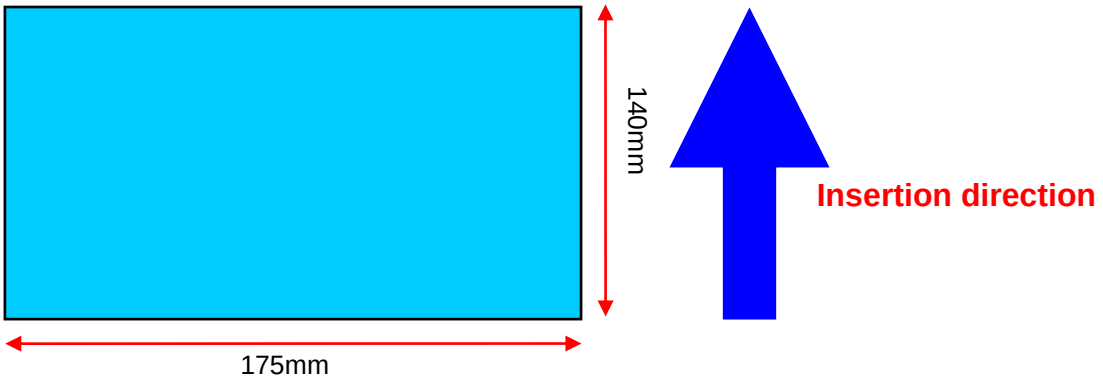

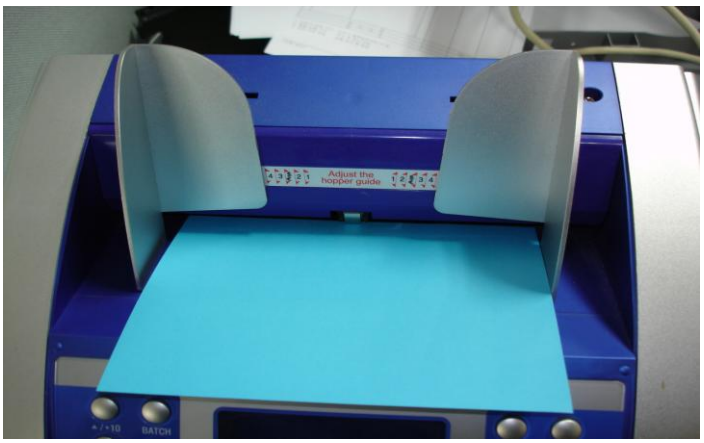

Display shows as below

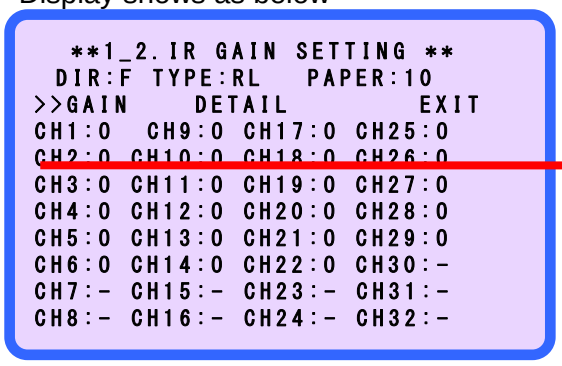

Progress direction

If the IR channel has a problem, “X” mark is shown.

(27) Prepare the Blue setting paper as below. (10 sheets)

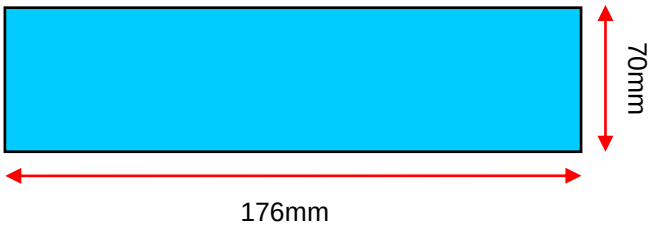

(28) Press the **MODE** key and go to **DETAIL** and put the Blue setting paper (10 sheets) on Hopper and press the **PRINT** key.

- GAIN DETAIL SETTING

```
  **1_2.IR GAIN SETTING **
 DIR:F TYPE:RL   PAPER:10
GAIN >>DETAIL          EXIT
============================

    Setting Complete!!



============================
CH8:0 CH16:0 CH24:0 CH32:0
```

When the setting is not complete, following message shows.
Almost completed one or two steps, but if not completed more than 5 steps then check IR sensor.

```
  **1_2.IR GAIN SETTING **
 DIR:F TYPE:RL   PAPER:10
GAIN >>DETAIL          EXIT
============================

  Retry Setting Paper..


============================
CH8:0 CH16:0 CH24:0 CH32:0
```

If inserted notes are different from displayed number, following message shows.

```
  **1_2.IR GAIN SETTING **
 DIR:F TYPE:RL   PAPER:10
GAIN >>DETAIL          EXIT
============================

   Check Paper Number..


============================
CH8:0 CH16:0 CH24:0 CH32:0
```

8-3-4. CIS BOARD SETTING

Notice 1.

Before Calibrate CIS sensor, please clean surface (glass) and the opposite side of CIS sensor.

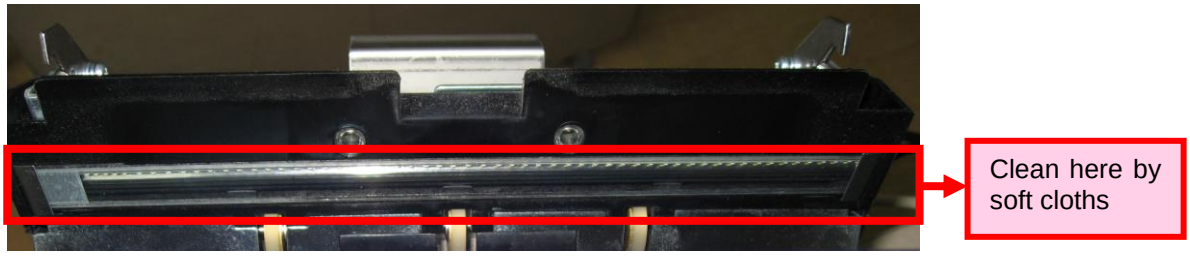

CIS sensor surface (glass)

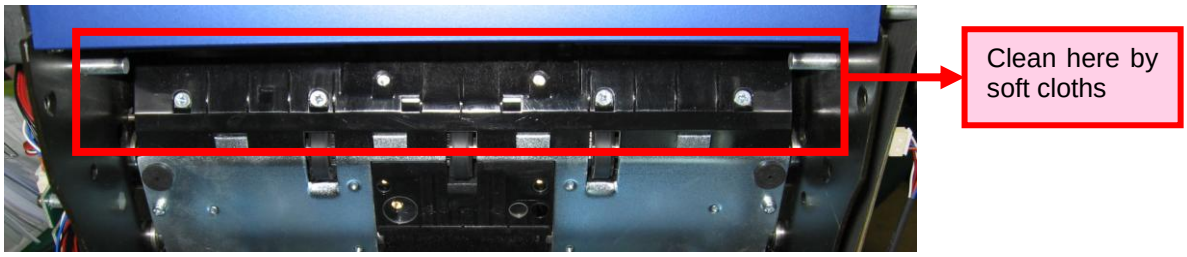

Opposite side of CIS sensor

Notice 2.

There are two kinds of CIS Main Board, CIS 1 Main Board and CIS 2 Main Board.
CIS 1 Main Board and CIS 2 Main Board are compatible.

<CIS 1 Main Board>

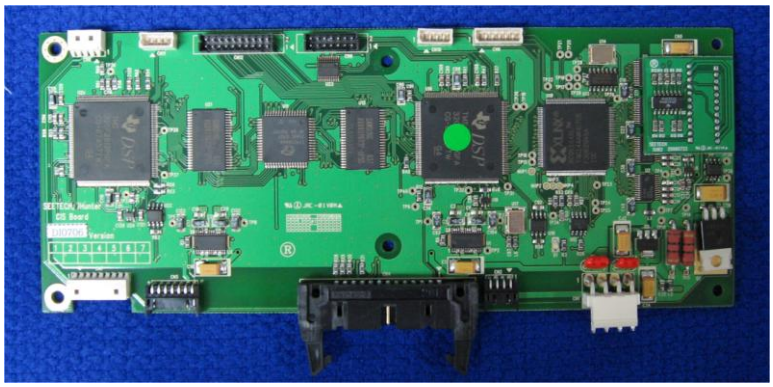

<CIS 2 Main Board>

According to Board type, CIS Calibration screen and Setting Value are little different.

8-2-4-1. CIS SETTING

(1) Turn the power on.

(2) The machine show below message on the LCD DISPLAY.

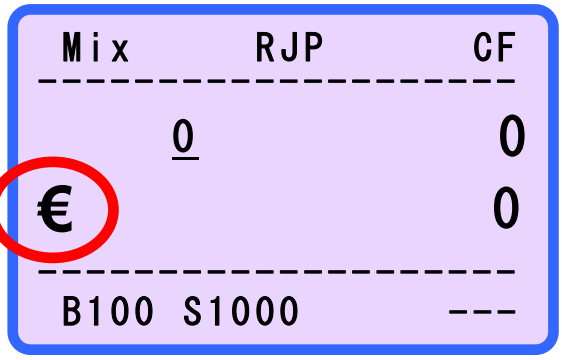

Any Operation Mode is available to calibrate the machine except standard counting Mode.

(3) Press and hold down the **RESTART** Key. The LCD DISPLAY shows as below.

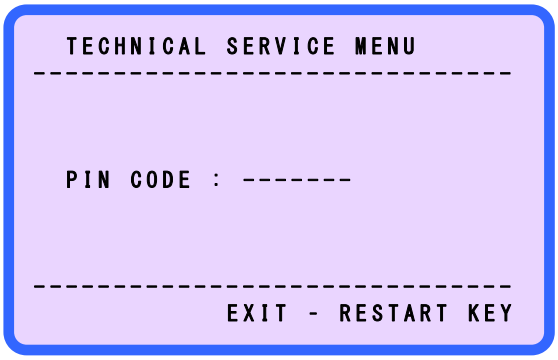

(4) Enter the PIN CODE,

Press and hold down **+10** → **CURRENCY** → Press and hold down **RESTART** → **CF** → **CURRENCY** → **MODE** → **PRINT**".

(5) Display shows as below.

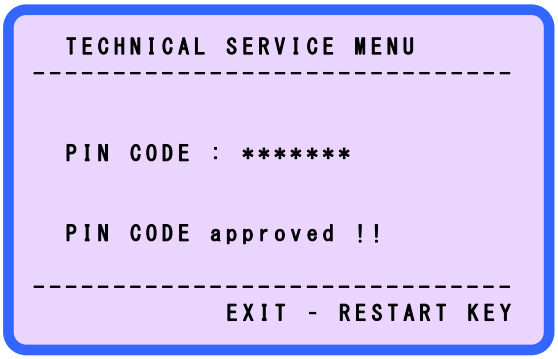

(6) To exit the TECHNICAL SERVICE MENU, press the **RESTART** key.

(7) Press and hold down the **RESTART** key and enter SELECT SETTING SENSOR GROUP.

```
SELECT SETTING SENSOR GROUP
----------------------------
  1.EXIT ( RESTART KEY )
  2.MAIN PART
  3.CF PART
>>4.CIS PART
  5.Q.C. REPORT
```

The item No. 4 is selected.

(8) Press the **MODE** key and select the item 4. CIS PART

(9) Press the **PRINT** key and enter the item 4. CIS PART Display shows as below.

```
CF     -> CIS SETTING
CURRENCY  -> ENCODER SETTING
```

(10) Press CF Key.

```
>> [1] White Paper Setting
   [2] Black Paper Setting
   [3] Light Value : [052]
   [4] USD NV Mode => [NO]
   [5] EXIT
================================
[W] Avg : 192   221   202   192
[W] Min : 168   185   173   153
--------------------------------
[B] Avg : 004   008   000   008
[B] Max : 008   015   003   012
```

<CIS 1 Main Board>

```
================================
>> [1] White Paper Setting
   [2] Black Paper Setting
   [3] Light Value : [82]
   [4] EXIT
================================
[W] Avg : 248   254   245   241
[W] Min : 222   227   228   216
--------------------------------
[B] Avg :   0     0     0     0
================================
```

<CIS 2 Main Board>

(11) Select the item White Paper.

(12) Prepare the jig for CIS sensor.

Calibration paper

(13) Clean the CIS sensor using soft colth.

(14) Put the jig to CIS sensor as following procedure.

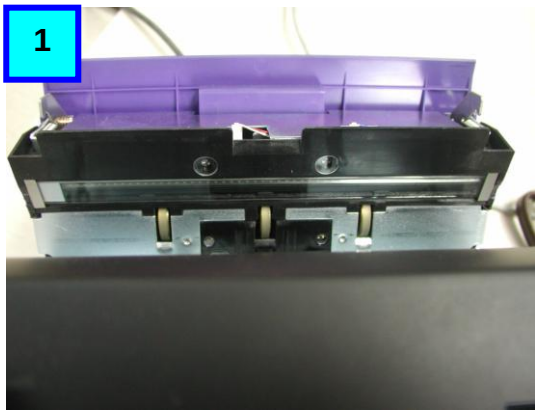

Open Rear Cover.

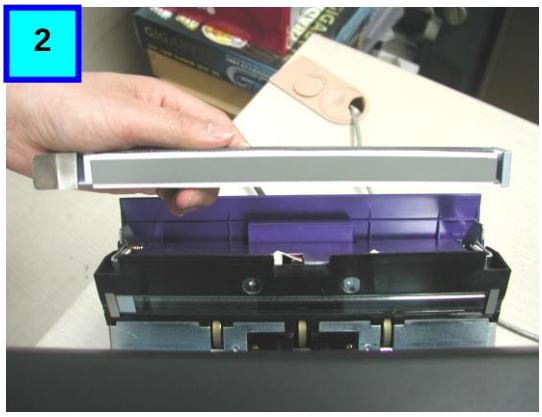

Prepare CIS jig.

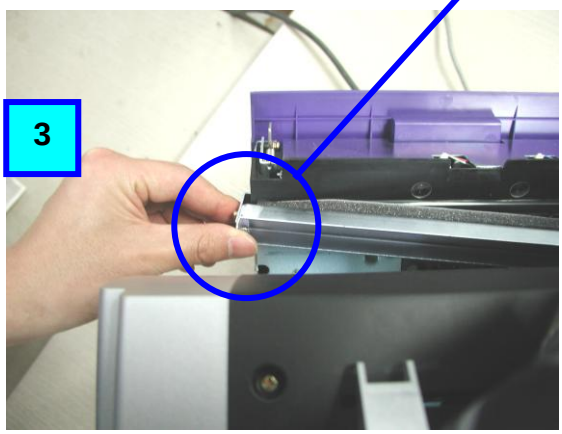

After set the calibration paper opposite CIS sensor part and put the jig on the left side of CIS sensor referring to picture.

4

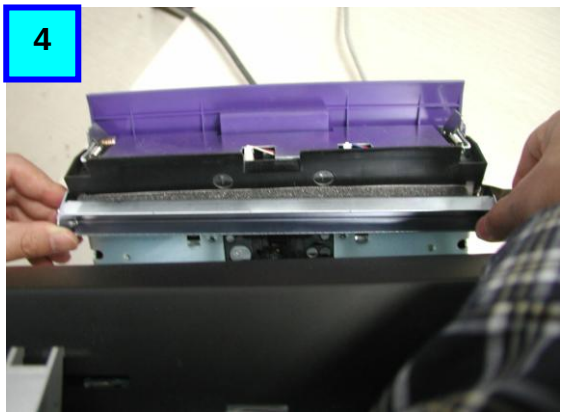

Adjust the other side of jig to CIS sensor.

5

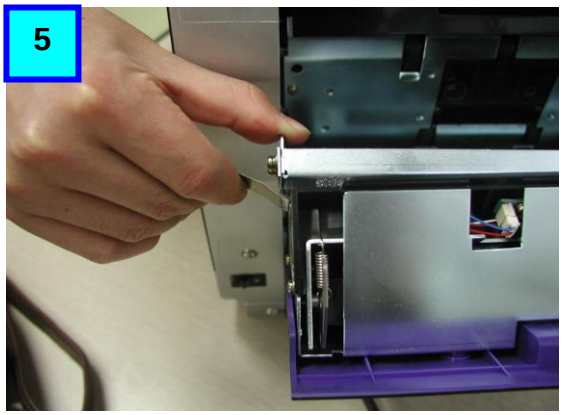

Pull the metal plate like a picture and fix the jig to detector module.

6

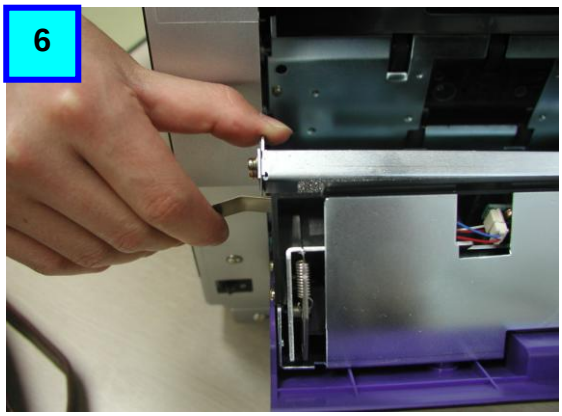

7

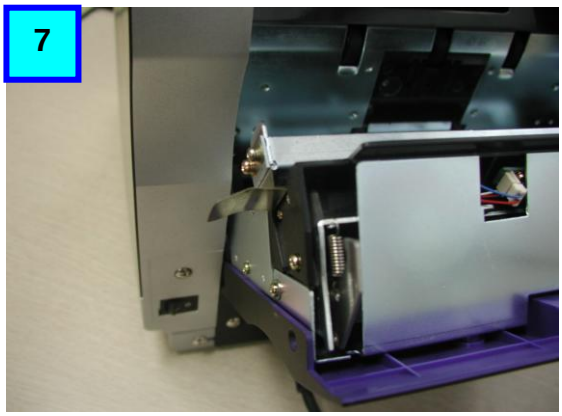

The metal plate holds the detector module.

8

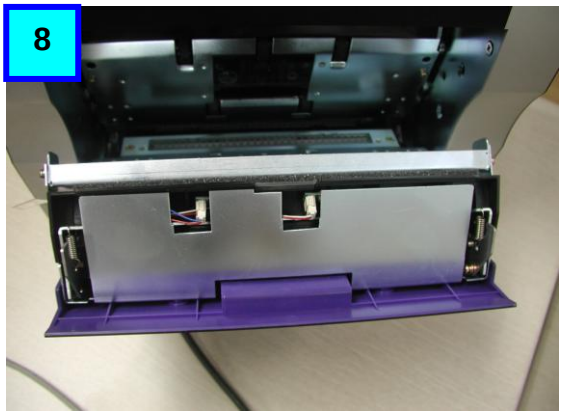

Cautions!!

Before put the jig, check the calibration paper side which is scratched or not.

If the paper parts is damaged, the calibration does not proper.

In this case, please replace the paper with new one.

We support the Gray paper type with calibration cards which is tape type.

(15)Press the **PRINT** key to calibrate white paper.

<CIS 1 Main Board>

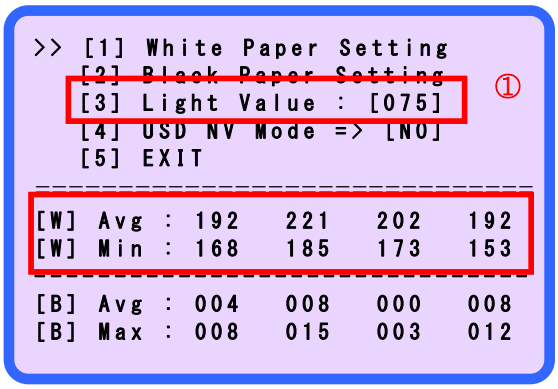

After calibrating, you have to check values. Setting value of CIS 1 Main Board is little different from CIS 2 Main Board.

① Light Value is 50 or 150, Calibration is not successful. You have to calibrate again. Light Value range is from 60 to 120.

② [W]Avg value must be over 180.
[W]Min value mus be over 130.
If not, you fail the calibration.

<CIS 2 Main board>

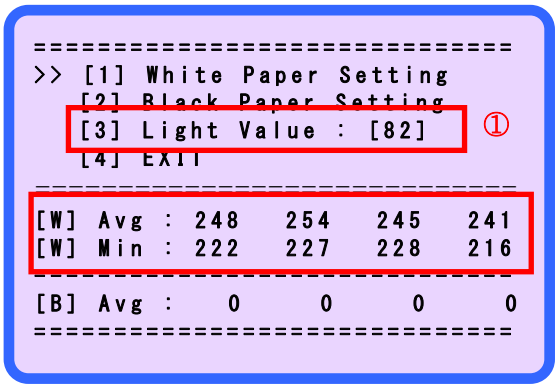

① If Light Value is 50 or 150, Calibration is not successful. You have to calibrate again. Light Value range is from 60 to 110.

② [W]Avg value must be over 190.
[W]Min value mus be over 170.
If not, you fail the calibration.

It is possible the real setting value is different.

(16) Remove the jig from CIS sensor.

(17) Close the rear cover.

(18) Press the **MODE** key and select the item Black Paper.

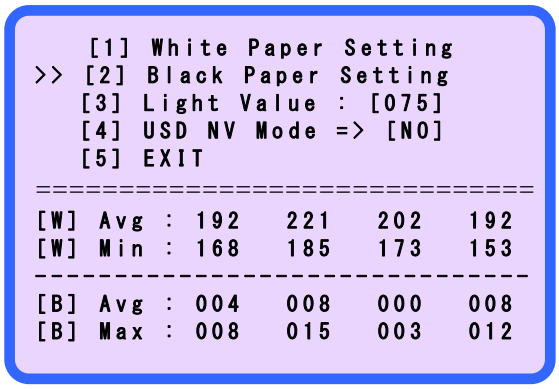

<CIS 1 Main Board>

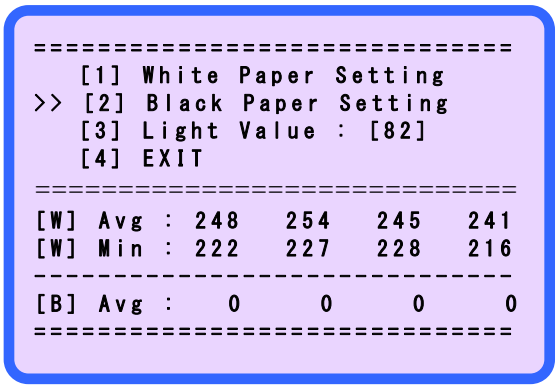

<CIS 2 Main Board>

(19) Press the **PRINT** key.

(20) Display shows as below.

<CIS 1 Main Board>

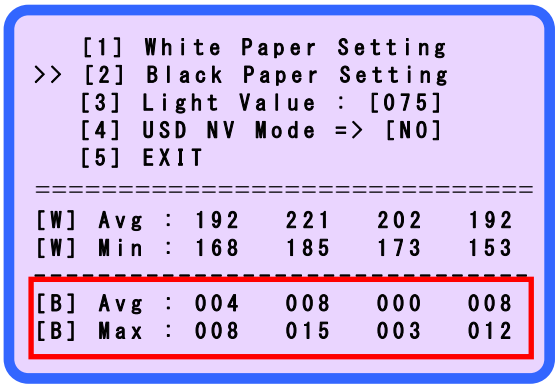

①

After calibrating, you have to check values. Setting value of CIS 1 Main Board is little different from CIS 2 Main Board.

① [B]Avg value must be under 10.
[B]Max value mus be under 30.
If not, you fail the calibration.

<CIS 2 Main board>

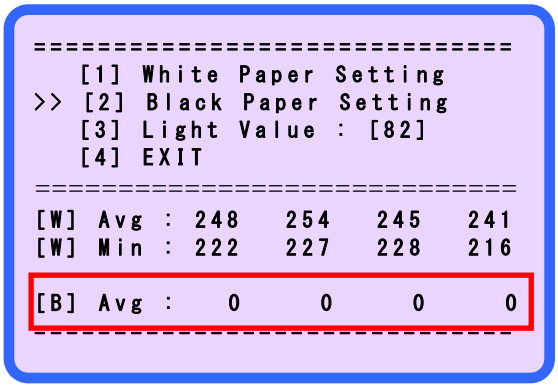

②

② [B]Avg value must be under 10.
If not, you fail the calibration.

It is possible the real setting value is different.

If setting is completed, machine saves data automatically and exit.

(21) Select No [4].USD NV Mode using the **MODE** key. (**Only CIS 1 Main Board**)

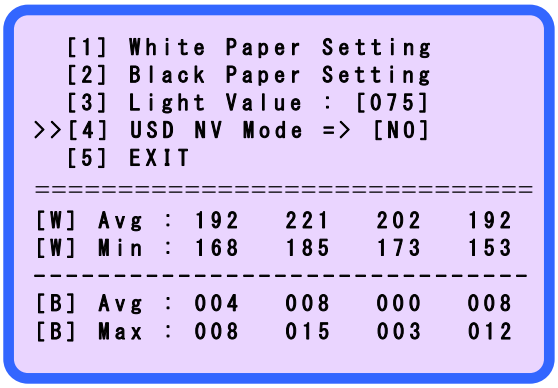

1. error : It means that not calibrated after upgrading.

2. NO : It is not separate New and Very New US dollar.

3. YES : It is separate New and Very New US dollar.

If you select "**NO**", it is not separate about new and very new US dollar.

It is more better reduce to rejection rate.

(22) Select NO or YES using the **PRINT** key if you want.

(23) Press the **RESTART** key to save data and exit CIS SETTING MODE.

8-2-4-2. CIS ENCODER SETTING

(1) Turn the power on.

(2) The machine show below message on the LCD DISPLAY.

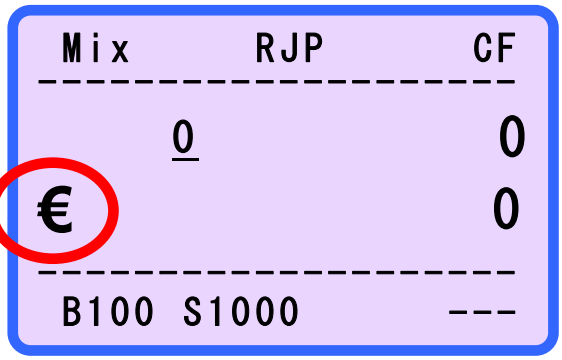

Any Operation Mode is available to calibrate the machine except standard counting Mode.

(3) Press and hold down the **RESTART** Key. The LCD DISPLAY shows as below.

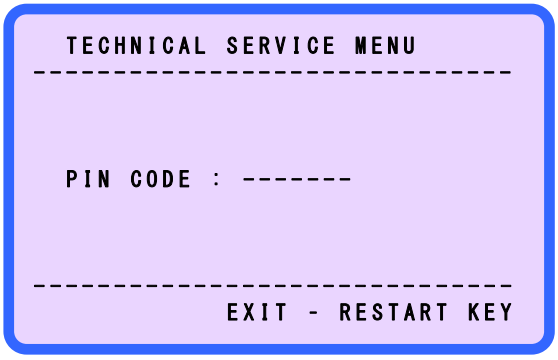

(4) Enter the PIN CODE,

Press and hold down **+10** → **CURRENCY** → Press and hold down **RESTART** → **CF** → **CURRENCY** → **MODE** → **PRINT**".

(5) Display shows as below.

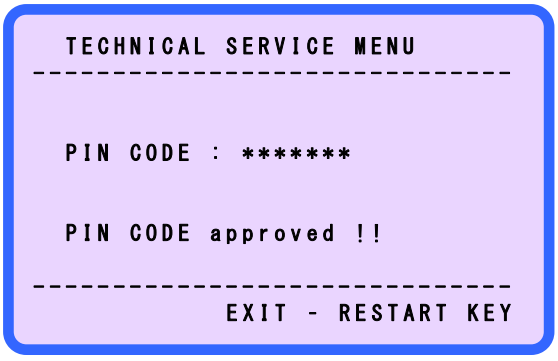

(6) To exit the TECHNICAL SERVICE MENU, press the **RESTART** key.

(7) Press and hold down the **RESTART** key and enter SELECT SETTING SENSOR GROUP.

```
SELECT SETTING SENSOR GROUP
----------------------------
  1.EXIT ( RESTART KEY )
  2.MAIN PART
  3.CF PART
>>4.CIS PART
  5.Q.C. REPORT
```

The item No. 4 is selected.

(8) Press the **MODE** key and select the item 4. CIS PART

(9) Press the **PRINT** key and enter the item 4. CIS PART

(10) Display shows as below.

```
CF     -> CIS SETTING
CURRENCY  -> ENCODER SETTING
```

(11) Press CURRENCY Key.

```
==============================
[Encoder Resolution Setting]
==============================
    Resolution [0.2915]mm

  [Paper Counter  ] : 00 paper
  [3 Times Repeat]  : 1  Time
------------------------------
(1)Put 10 paper on the Hopper
(2)Press the Print Key
==============================
```

(12).Prepare 10 sheets of CIS ENCODER SETTING PAPER.

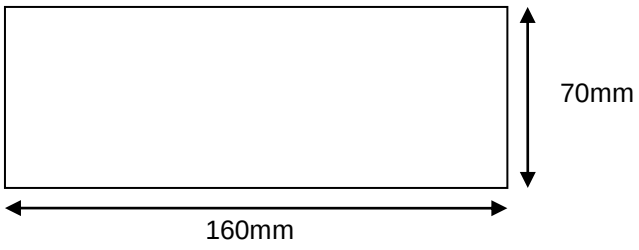

If you don’t have these papers now, you can make them with A4 paper.

After cut down A4 paper into 160mmx70mm, please go to next step.

(13) Put these papers on the Hopper and press PRINT Key

(14) The papers are counted and Resolution value is changed.

(15) Repeat Step (12) ~ (13) two more times.

8-4. DESCRIPTION OF TECHNICAL MENU

8-4-1. TECHNICAL SERVICE MENU

(1) Turn the power on.

(2) The machine show below message on the LCD DISPLAY.

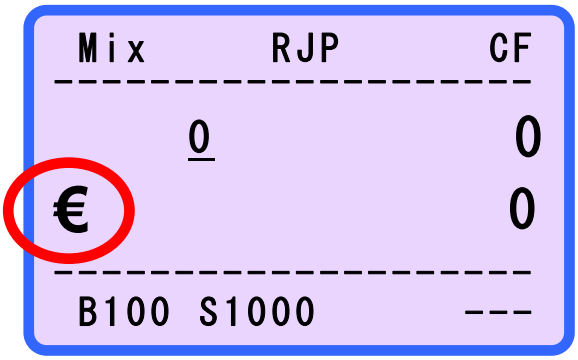

Any Currency Mode is available to calibrate the machine.

(3) Press and hold down the **RESTART** Key. The machine show below message on the LCD DISPLAY.

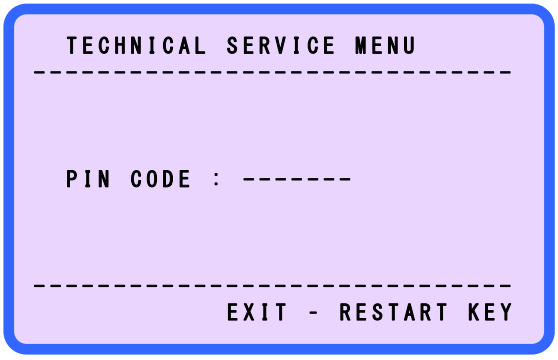

(4) Enter the PIN CODE,

Press and hold down **+10** → **CURRENCY** → Press and hold down **RESTART** → **CF** → **CURRENCY** → **MODE** → **PRINT**".

(5) Display shows as below.

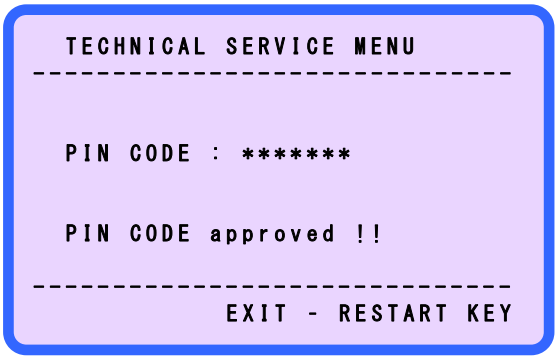

(6) If you want to exit the TECHNICAL SERVICE MENU, press the **RESTART** key.

(7) Press and hold down the **+1** key until the machine show below message on the LCD DISPLAY.

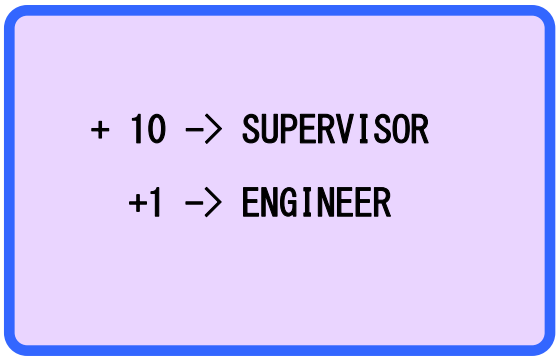

Press the **+1** key until the machine show below message on the LCD DISPLAY.

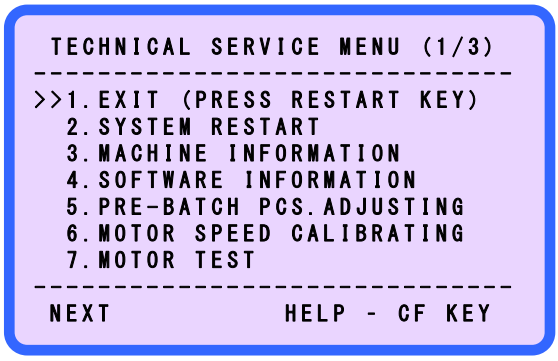

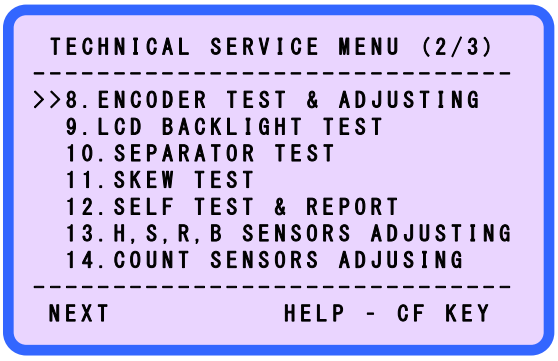

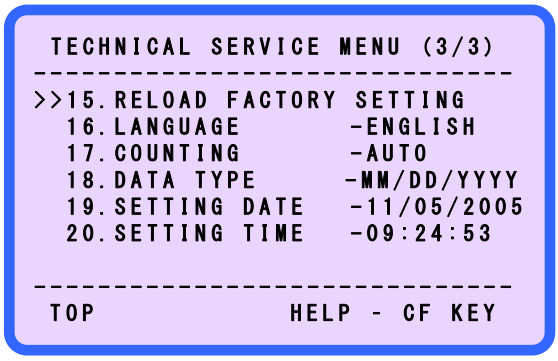

(8) Description of TECHNICAL SERVICE MENU.

1.EXIT : Exit the menu.

2.SYSTEM RESTART : The machine restart.

3.MACHINE INFORMATION : Description of machine original information

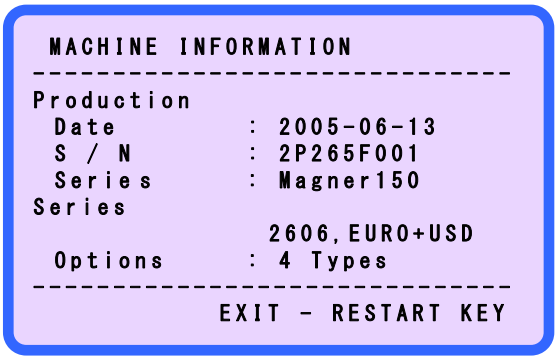

4.SOFTWARE INFORMATION : Software information of the machine PCB assembly.

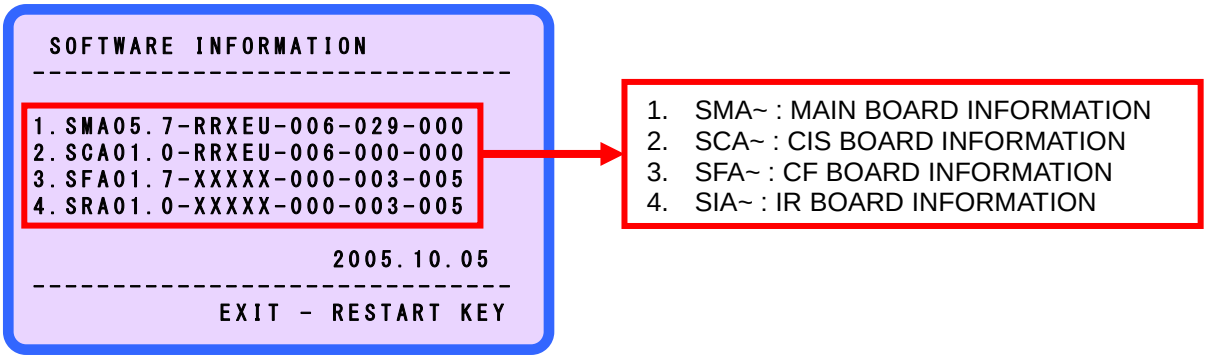

5.PRE-BATCH PCS.ADJUSTING : The adjusting of Batch number.

Refer to **BATCH** Mode of **4.3 OPERATION MODE** I

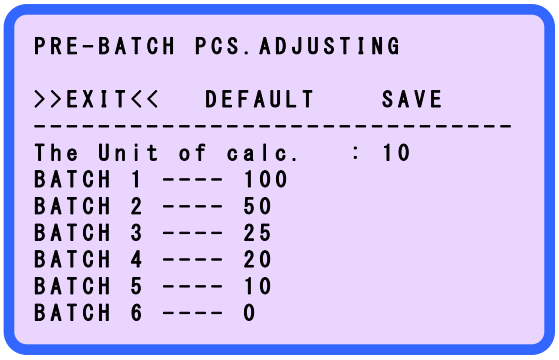

6.MOTOR SPEED CALIBRATING : You can calibrate the motor speed.

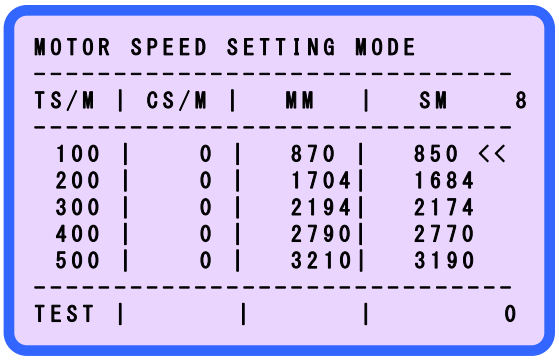

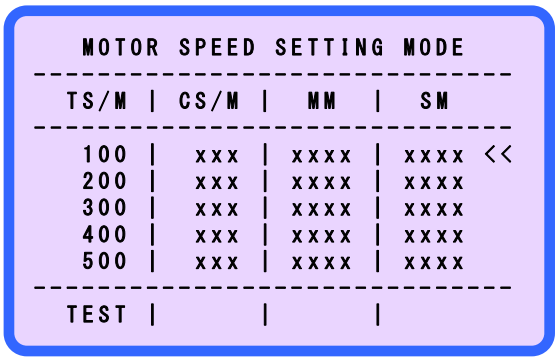

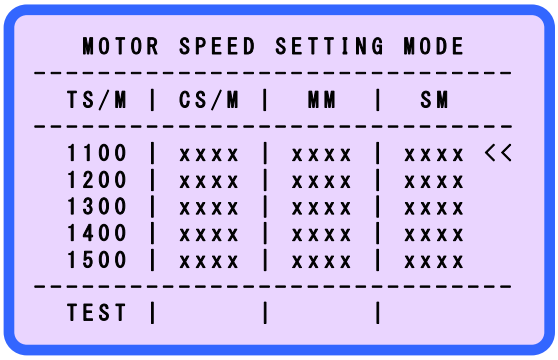

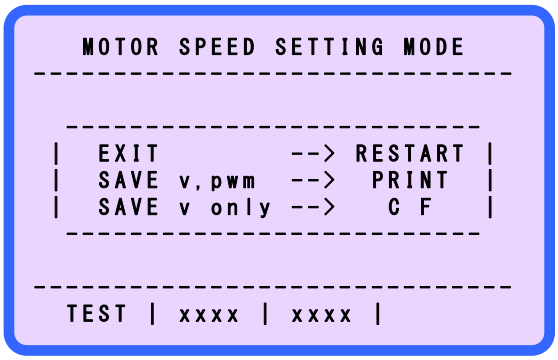

7.MOTOR TEST : Press the **PRINT** key and starts motor test.

It is possible to change speed using the **+10** or **+1** key.

If you stop the motor test, press the **PRINT** key.

8.ENCODER TEST & ADJUSTING : Press the **PRINT** key and starts encoder setting.

If you stop the setting, press the **PRINT** key.

9.LCD BACKLIGHT TEST : Press the **PRINT** key and starts LCD blinking.

If you stop the test, press the **PRINT** key.

10.SEPARATOR TEST : Press the **PRINT** key and starts SOLENOID test.

If you stop the test, press the **PRINT** key.

11.SKEW TEST : This test mode is for developer and factory operator.

12.SELF TEST & REPORT : This test mode is for only developer.

13.H,S,R,B SENSORS ADJUSTING : Press the **PRINT** key and check sensor.

14.COUNT SENSOR ADJUSTING : Press the **PRINT** key and starts sensor setting.

If you stop the setting, press the **PRINT** key.

15.RELOAD FACTORY SETTING : Reload the machine setting to factory setting.

Be cardful, initialized all of setting.

16.LANGUAGE : Display the current language.

17.COUNTING : Select counting mode. **AUTO** or **External**.

AUTO : When user place the notes on the Hopper, the machine starts running.

External : The machine starts running only external device.

*** NO.18~20 is optional(Real time board).**

18.DATE TYPE : Select the date type MM/DD/YYYY or YYYY/MM/DD using the **PRINT** key.

19.SETTING DATE : If user want to set the date press the **PRINT** key.

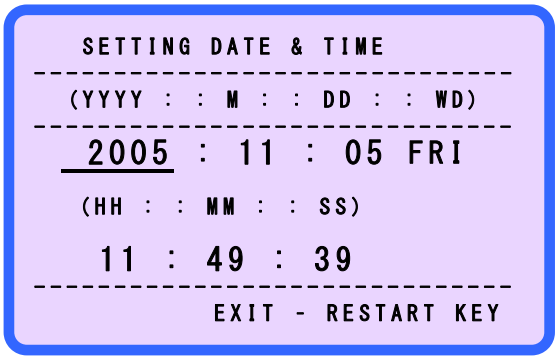

1. Select the position what you want to change using the **MODE** key.
   (view the line)
2. Change the value using **+10** or **+1** key.
3. If finishing set date, press **PRINT** key.
4. Display shows as below.

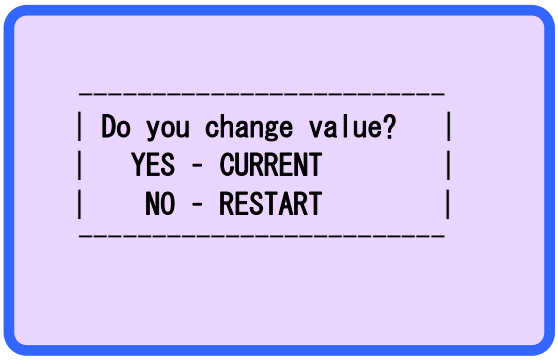

If you want to save the value, press **CURRENCY** key.

20.SETTING TIME : It is same of 19.SETTING DATA.

8-4-2. SUPERVISOR MENU

(1) Turn the power on.

(2) The machine show below message on the LCD DISPLAY.

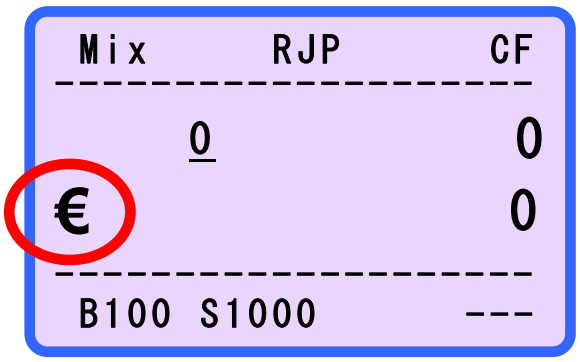

Any Currency Mode is available to calibrate the machine.

(3) Press and hold down the **RESTART** Key. The machine show below message on the LCD DISPLAY.

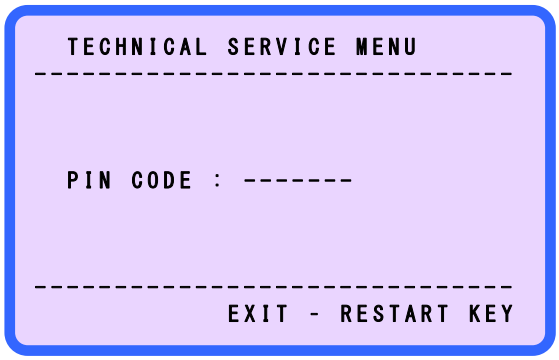

(4) Enter the PIN CODE,

Press and hold down **+10** → **CURRENCY** → Press and hold down **RESTART** → **CF** → **CURRENCY** → **MODE** → **PRINT**".

(5) Display shows as below.

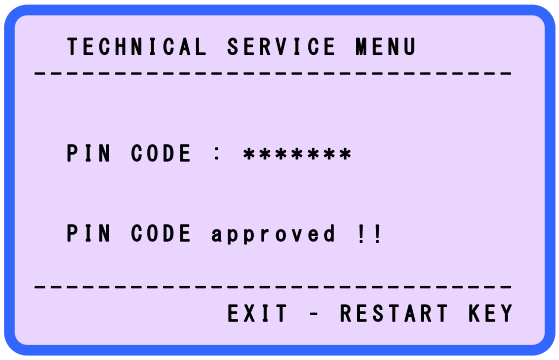

(6) If you want to exit the TECHNICAL SERVICE MENU, press the **RESTART** key.

(7) Press and hold down the **+1** key until the machine show below message on the LCD DISPLAY.

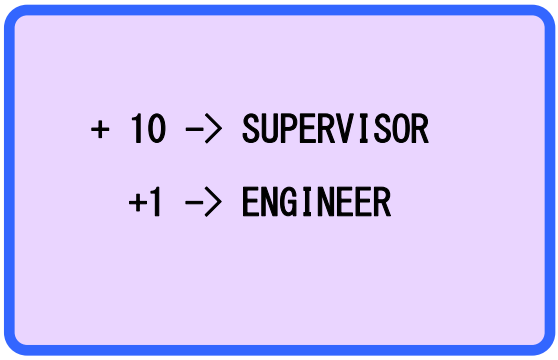

(8) Press the **+10** key until the machine show below message on the LCD DISPLAY.

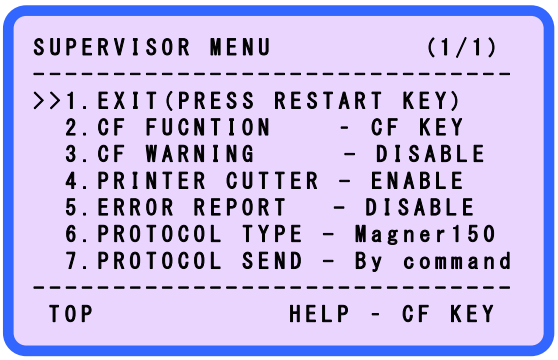

1. EXIT : Exit the menu.
2. CF FUNCTION : Select the CF function by pressing the CF key or ALWAYS ON.
   ① CF KEY : You can select the CF function using the CF key.
   ② ALWAYS ON : CF function activate always.

3.CF WARNING : Select the CF warning display.

If you select ENABLE and rejected notes cause of CF error, Display shows as below.

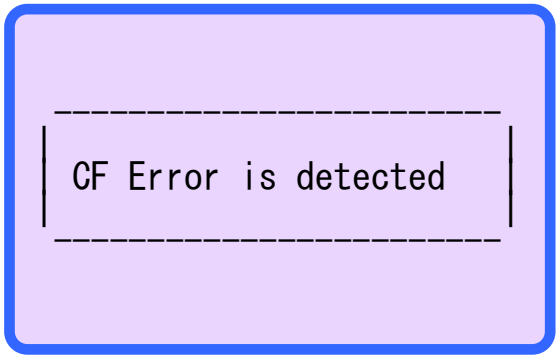

Blinking the message twice and Display shows as below.

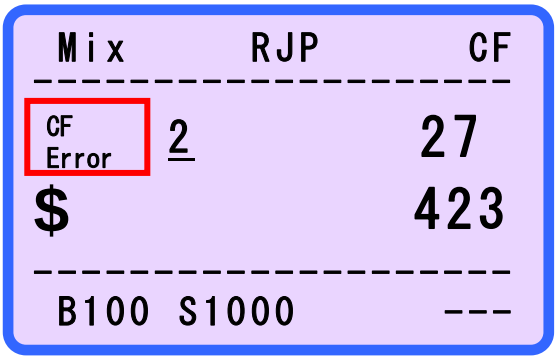

4. PRINTER CUTTER : Select the Auto cutter function of serial printer.
5. ERROR REPORT : Select the error report print function.
   ① DISABLE : Not print any error report to printer.
   ② COUNT : Print the error code report to printer in operation mode.
   ③ SERIAL : Print the error code report to printer in serial mode.
   ④ BOTH : Print the error code report to printer in operation and serial mode.
6. PROTOCOL TYPE : Select protocol type
   ① Magner150
   ② Other
7. PROTOCOL SEND : Select the control type
   ① By command : Control by command

③ After counting : After counting automatically send the protocol.

8-4-3. CIS TEST MODE

(1) Turn the power on.

(2) The machine show below message on the LCD DISPLAY.

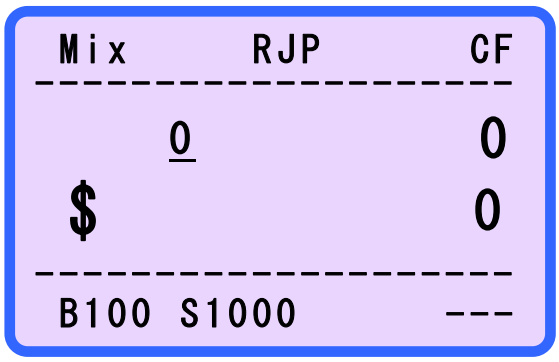

Any Operation Mode is available to calibrate the machine except standard counting Mode.

(3) Press and hold down the **RESTART** Key. The LCD DISPLAY shows as below.

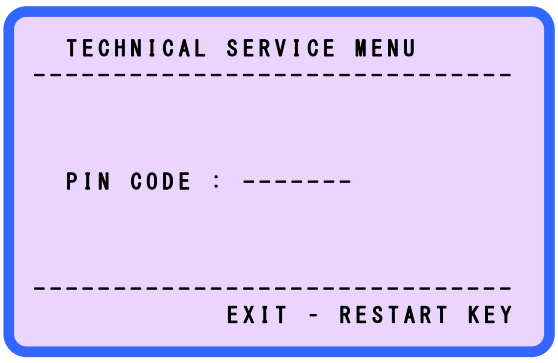

(4) Enter the PIN CODE,

Press and hold down **+10** → **CURRENCY** → Press and hold down **RESTART** → **CF** → **CURRENCY** → **MODE** → **PRINT**".

(5) Display shows as below.

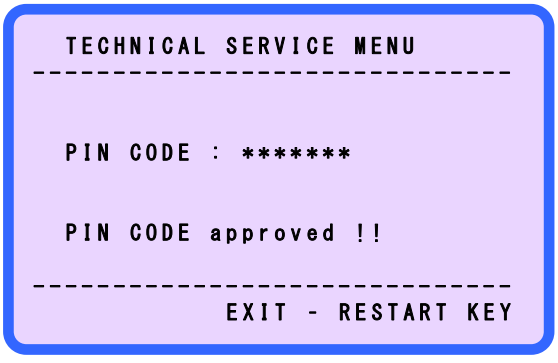

(6) To exit the TECHNICAL SERVICE MENU, press the **RESTART** key.

Press and hold down the **CURRENCY** key and enter CIS TEST MODE.

```
CIS TEST MODE - OK      (1/2)
------------------------------
  1.EXIT (PRESS RESTART KEY)
  2.CIS SOFTWARE VERSION
  3.CIS SETTING MODE
>>4.CIS BOARD STATUS MODE
  5.CIS INFORMATION FLAG* NONE
                          NONE
  6.CURRENCY              EURO
------------------------------
  NEXT PAGE - BATCH KEY
```

```
CIS TEST MODE - OK      (2/2)
------------------------------
  6.CURRENCY              EURO
  7.NORMAL FULL IMAGE VIEW
  8.SERIAL FULL IMAGE VIEW




------------------------------
  NEXT PAGE - BATCH KEY
```

(7) Description of MENU

1.EXIT : Exit CIS TEST MODE

2.CIS SOFTWARE VERSION

```
==============================
  CIS Software   [2008. 4.23]
==============================
(1) Machine       : A
(2) Hardware      : C
(3) Light         : WHITE
(4) Euro          : [T] 3.1
(5) USD           : [T] 3.2
(6) Israel        : [N] 3.3
(7) England       : [N] 3.1
==============================
```

[2008. 4.23]	Final revision date
(1) Machine	Machine version. (A, B, C, … , Z)
(2) Hardware	Hardware version (A, B, C, … , Z)
(3) Light	Light Source - WHITE
(4)~(7) Currency	Local currency information which machine have.
	[T]/[N]: Recognition Serial Number- Y (yes) , N (no), T (Image)
	3.x : CIS software version

3.CIS SETTING MODE : Set up CIS value of white and black.

This is same mode **with 9-3-4.CIS board setting**.

```
>> [1] White Paper Setting
   [2] Black Paper Setting
   [3] Light Value : [052]
   [4] USD NV Mode => [NO]
   [5] EXIT
================================
[W] Avg : 253   246   252   221
[W] Min : 235   213   195   215
--------------------------------
[B] Avg : 009   011   008   015
[B] Avg : 012   014   011   018
```

4.CIS BOARD STATUS MODE : Check CIS Board state

```
==============================
      [CIS Board State]
==============================
[1] Master Main RAM        [0]
[2] Master Dual RAM        [0]
[3] Slave Main RAM         [0]
[4] Slave Dual RAM         [0]
[5] M<->S Communication    [0]
------------------------------
[Avg] : [0]   [0]   [0]   [0]
[Max] : [0]   [0]   [0]   [0]
```

This mode can see state of CIS board and CIS sensor.
Red box is 4 channel state of CIS sensor.
If there is problem (ex: serious dirty or CIS channel dead or CIS board damage...),
Display show [X] mark of problem channel.

```
------------------------------
      [CIS Board State]
------------------------------
[1] Master Main RAM        [0]
[2] Master Dual RAM        [X]
[3] Slave Main RAM         [0]
[4] Slave Dual RAM         [0]
[5] M<->S Communication    [0]
------------------------------
[Avg] : [0]   [0]   [0]   [0]
[Max] : [0]   [X]   [0]   [0]
```

5.CIS IMFORMATION FLAG

1) NONE : Not display any information.

2) LCD : LCD Display shows information of notes.

After counting, you can see all information of notes using press and hold down **CURRENCY** key.

Display shows as below.

CIS Information Page (01/02)

001:	-0.2	154	65	N	20	FF	99	[00]
002:	+0.8	155	66	O	20	FF	99	[00]
003:	+0.6	155	66	O	10	FF	99	[00]
004:	+0.0	156	67	O	1	FF	99	[00]
005:	+0.2	156	66	N	10	FF	99	[00]
006:	+0.6	154	65	N	20	FF	99	[00]
007:	-1.1	156	65	O	5	FF	99	[00]
008:	-0.2	155	66	N	5	FF	99	[00]

① ② ③ ④ ⑤ ⑥ ⑦ ⑧

If you want to see next page, press the **+10** or **+1** key.

① Count number : 1~300(Max)

② Insertion angle : For developer

③ Length of note : X and Y length(unit : mm)

④ Version : O(Old), N(New), V(Very new)

⑤ Denomination

⑥ Insertion direction : FF, FR, BF, BR

FF

FR

BF

BR

⑦ Recognition rate : Max value is 99%.

⑧ Error code of CIS part : ex) [01] is Skew left error.
Refer to Appendiex 2. Error code for more detail.

3) PC : This mode is for developer.

4) BOTH : Display show LCD and PC information of notes.

5) FILE : Save information of notes to PC using software.

6) ALL : See information of notes to PC using software.

You can see error information of notes why reject and can select error code using **+10** or **+1** key.

6.CURRENCY : Select currency what you want to see CIS image using **PRINT** Key before see full image of note.

7.NORMAL FULL IMAGE VIEW : You can see full image of note using software.

This image is real size.

8.SERIAL FULL IMAGE VIEW : You can see big full image of note using software.

This image is real size.

8-4-4. CF LEVEL SETTING MODE

(1) Turn the power on.

(2) Go to USD Mode.

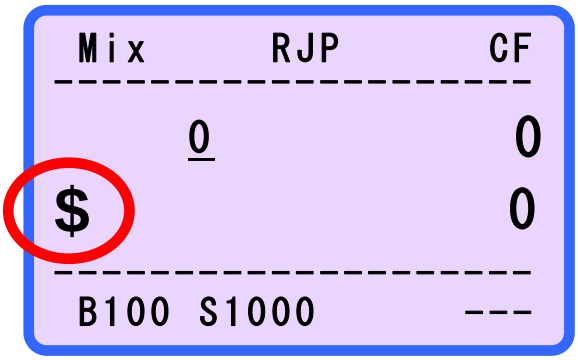

(3) Press and hold down the **RESTART** Key. The LCD DISPLAY shows as below.

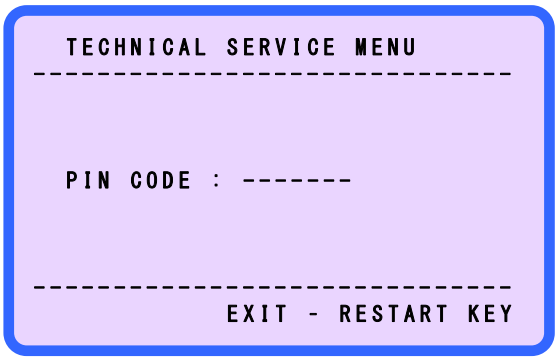

(4) Enter the PIN CODE,

Press and hold down **+10** → **CURRENCY** → Press and hold down **RESTART** → **CF** → **CURRENCY** → **MODE** → **PRINT**".

(5) Display shows as below.

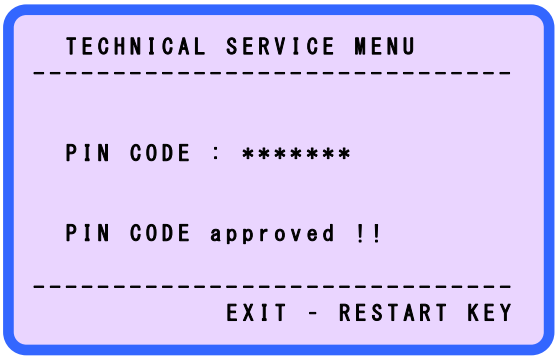

(6) To exit the TECHNICAL SERVICE MENU, press the **RESTART** key.

(7) Press and Hold down CF Key.

Display shows as below.

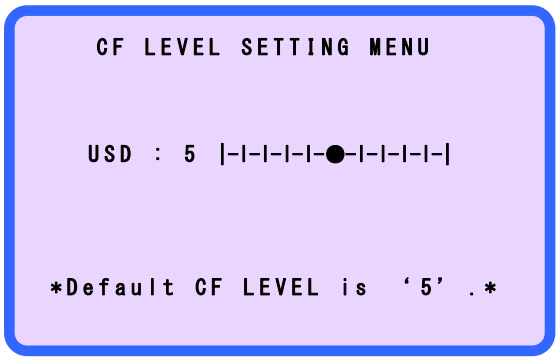

There are 9 CF Level.

Default Level is 5 and user can change CF Level by pressing PRINT Key.

When you change CF Level, UV and MG level for counting USD is changed.

In Level 1, machine counts USD without checking UV and MG level.

The higher Level can detect more counterfeits but genuine notes reject rate will be increased.

CHAPTER 9. TROUBLE

9-1. ERROR CODE

When the notes are rejected, user can check the rejection report.

Please do not remove the note from reject pocket, press and hold **MODE** key.

The display shows as below.

Count means the number of rejected notes.

User can move next or previous page pressing **+10** key or **+1** key.

And when pressing **RESTART** key, return to operating mode display.

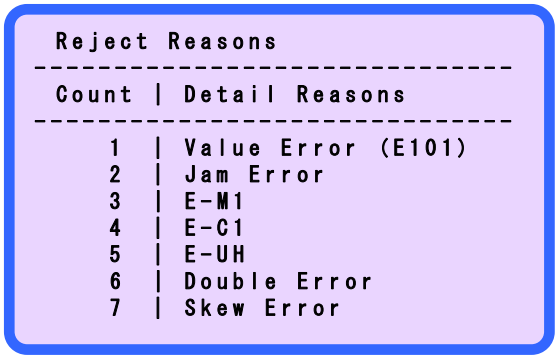

Value Error (E101) means that when the note insert to the machine, it skewed to the left.
Please check following error code and display message tables.

1) COUNT ERROR

ERROR CODE	DISPLAY MESSAGE	CAUSE OF ERROR	Procedure for removing the cause of error
E001	Jam Errror	Jamming in the machine	1. Remove notes from the HOPPER, Reject Pocket and Stacker Pocket. 2. Open rear cover and remove notes in the machine. 3. Open front cover and remove notes in the machine. 4. Restart counting operation.
E002	Skew Error	Skew bill fed	1. Remove notes from the HOPPER, Reject Pocket and Stacker Pocket. 2. Restart counting operation.
E003	Rear cover opened	Rear cover opened or a note is in the machine	1. Open rear cover and remove notes in the machine. 2. Restart counting operation.
E004	Chain Error	Chain bills were fed	Remove notes from the Reject Pocket and Stacker Pocket and restart
E005	Double Error	Doubled bills were fed	
E006	Half Error	Bill was fed	
E007	Dispenser full	Dispenser function is completed	Remove notes from the Reject Pocket and Stacker Pocket.
E008	Separator error	There is no time to operate separater	Remove notes from the Reject Pocket and Stacker Pocket and restart.
E009	Front cover opened	Front cover is opened. A note is in the machine	1.Open front cover and remove notes in the machine. 2.Restart counting operation.
E011	Batch Full	Batch Counting is completed	Remove notes from the Stacker Pocket and restart.
E012	Reject Pocket Full	Reject Pocket is full	Remove notes from the Reject Pocket and restart.
E013	Stacker Pocket Full	Stacker Pocket is full	Remove notes from the Stacker Pocket and restart.
E014	No Value Result	Communication Error between Main and CIS board	Restart counting operation.
E015	No UV,MG Result	Communication Error between Main and CF board	Restart counting operation.
E016	No IR Result	Communication Error between Main and CF board	Restart counting operation.

2) VALUE ERROR

ERROR CODE	DISPLAY MESSAGE	CAUSE OF ERROR	Procedure for removing the cause of error
E101	Value Error(E101)	Skew (left)	Restart counting operation. 1.Check and adjust the insertion gap. 2.Check the CIS setting value. 3.See the image of note.
E102	Value Error(E102)	Skew (right)	
E103	Value Error(E103)	Dimension (Oringinal X length)	
E104	Value Error(E104)	Dimension (Oringinal Y length)	
E105	Value Error(E105)	Dimension (Oringinal X,Y length)	
E106	Value Error(E106)	Dimension (Currency X length)	
E107	Value Error(E107)	Dimension (Currency Y length)	
E108	Value Error(E108)	Dimension (Currency X,Y length)	
E109	Value Error(E109)	Uncertain Error	
E110	Value Error(E110)	Different Currency	
E111	Value Error(E111)	Chain error	
E112	Value Error(E112)	Side slope (Left&Right slope difference)	
E113	Value Error(E113)	Fanwise (Original X Length)	
E114	Value Error(E114)	Fanwise (Original Y Length)	
E115	Value Error(E115)	Fanwise (Original X,Y Length)	

3) UV ERROR

ERROR CODE	DISPLAY MESSAGE	CAUSE OF ERROR	Procedure for removing the cause of error
E201	E-UH	UV1 high level error	Suspect note. Check and restart counting operation.
E202	E-UL	UV1 low level error	
E203	E-BH	UV2 high level error	
E204	E-BL	UV2 low level error	
E205	E-FH	FL high level error	
E206	E-FL	FL low level error	

4) MG ERROR

ERROR CODE	DISPLAY MESSAGE	CAUSE OF ERROR	Procedure for removing the cause of error
E211	E-M1(all currencies)	MG information error 1	Suspect note. Check and restart counting operation. 1.Check the note whether dirty or wear out. 2.Check the rear cover lock.
E212	E-M2(all currencies)	MG information error 2	
E213	E-M3(all currencies)	MG information error 3	
E214	E-M4(local only)	MG information error 4	
E215	E-M5(all currencies)	MG information error 5	

5) CF ERROR

ERROR CODE	DISPLAY MESSAGE	CAUSE OF ERROR	Procedure for removing the cause of error
E221	E-C1	A note is skewed	Restart counting operation.
E222	E-C2	A note with Hole is mixed	
E223	E-C3	A note with Half is mixed	
E224	E-C4	A note with Size is mixed	
E225	E-C5		

6) IR ERROR

ERROR CODE	DISPLAY MESSAGE	CAUSE OF ERROR	Procedure for removing the cause of error
E301	IR Error (E301)	IR Left skew error	Suspect note. Check and restart counting operation.
E302	IR Error (E302)	IR Right skew error	
E303	IR Error (E303)	IR Front fill error	
E304	IR Error (E304)	IR Front empty error	
E305	IR Error (E305)	IR Front deep error	
E306	IR Error (E306)	IR Rear fill error	
E307	IR Error (E307)	IR Rear empty error	
E308	IR Error (E308)	IR Rear deep error	
E309	IR Error (E309)	IR Front empty and fill error	
E310	IR Error (E310)	IR Front fill and deep error	
E311	IR Error (E311)	IR Rotate error	
	IR Error (E312)	IR Hole error	
	IR Error (E313)	IR Half error	
	IR Error (E314)	IR Size error	
	IR Error (E315)	IR Counterfeit error	
E312	IR Error (E312)	IR Double error	
E313	IR Error (E313)	IR Dark Double error	
E314	IR Error (E314)	IR Front empty and deep error	
E315	IR Error (E315)	IR Front fill and secret error	
E316	IR Error (E316)	IR Front empty and secret error	
E317	IR Error (E317)	IR Front deep and secret error	
E318	IR Error (E318)	IR Rear empty and fill error	
E319	IR Error (E319)	IR Rear fill and deep error	
E320	IR Error (E320)	IR Rear empty and deep error	
E321	IR Error (E321)	IR Rear fill and Secret error	
E322	IR Error (E322)	IR Rear empty and secret error	
E323	IR Error (E323)	IR Rear deep and secret error	

CONTENTS

- CALIBRATION PROBLEM
- COMMUNICATION PROBLEM
- DISPLAY PROBLEM
- KEY PROBLEM
- MECHANICAL PROBLEM
- MOTOR PROBLEM
- POWER PROBLEM
- REJECT PROBLEM
- SENSOR PROBLEM
- SOLENOID PROBLEM
- UPGRADE PROBLEM

CALIBRATION PROBLEM

- **Select part that caused the problem**
  - ▶ MAIN PART
    - | .COUNT SENSOR
      - - CIS COUNT SENSOR
      - - MAIN COUNT SENSOR
      - - REJECT COUNT SENSOR
    - || .MOTOR CALIBRATION
  - ▶ CF PART
    - | .UV CALIBRATION
      - - UV OFFSET SETTING
      - - UV GAIN DETAIL SETTING
    - || .MAGNETIC SENSOR CHECK
  - ▶ IR PART
    - | .IR CALIBRATION
      - - IR OFFSET SETTING
      - - IR GAIN SETTING
  - ▶ CIS PART
    - | .WHITE PAPER SETTING
    - || .BLACK PAPER SETTING

CALIBRATION PROBLEM

MAIN PART : CIS counter sensor

Remove dust on the Counter sensor and calibrate again

↓

Check the Counter sensor harness(1252,1255 or 1244) and CF&CIS operation harness(1240) then calibrate again

↓

Replace the CIS counter LED(1010+0160 or 1010-1+1085) then calibrate again

↓

Replace the CIS counter sensor(1009+0172) then calibrate again

↓

Replace the Main board(1001) then calibrate again

CALIBRATION PROBLEM

MAIN PART : Main counter sensor

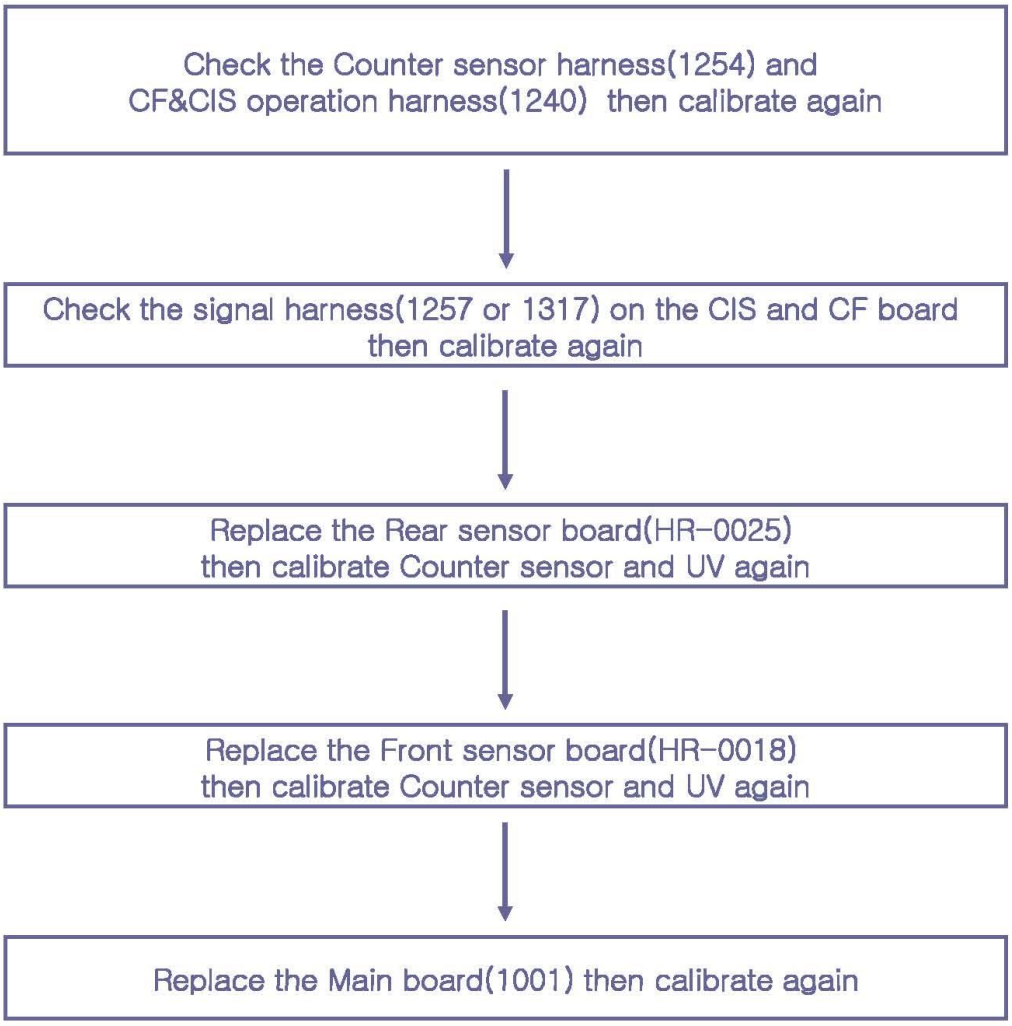

CALIBRATION PROBLEM

MAIN PART : Reject counter sensor

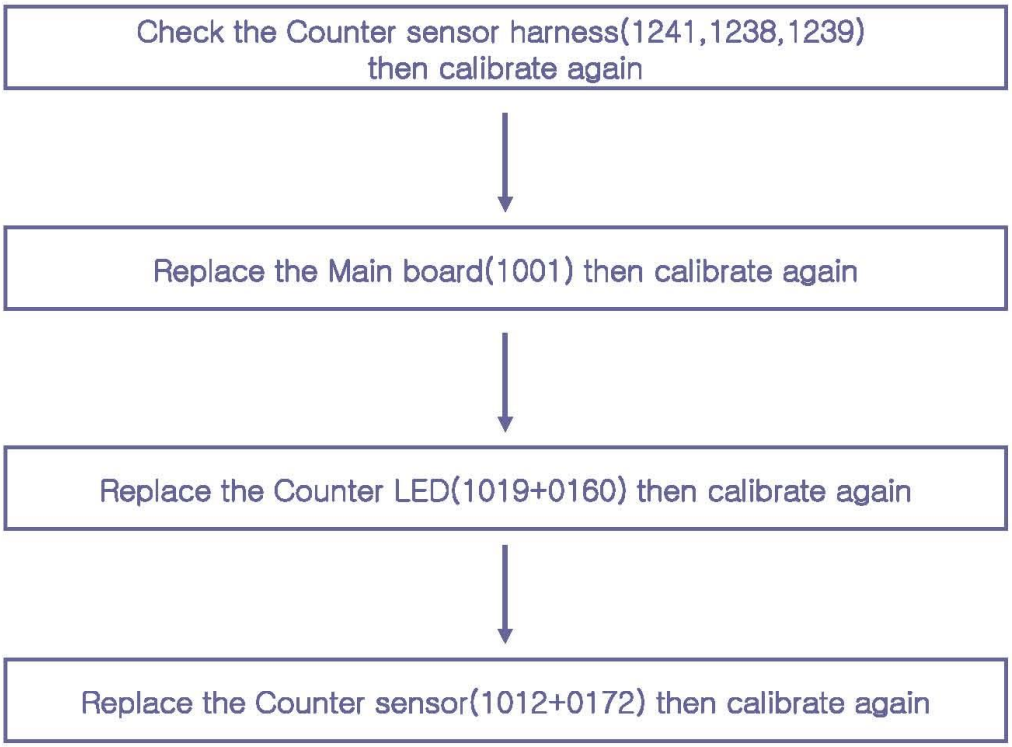

CALIBRATION PROBLEM

MAIN PART : Motor calibration

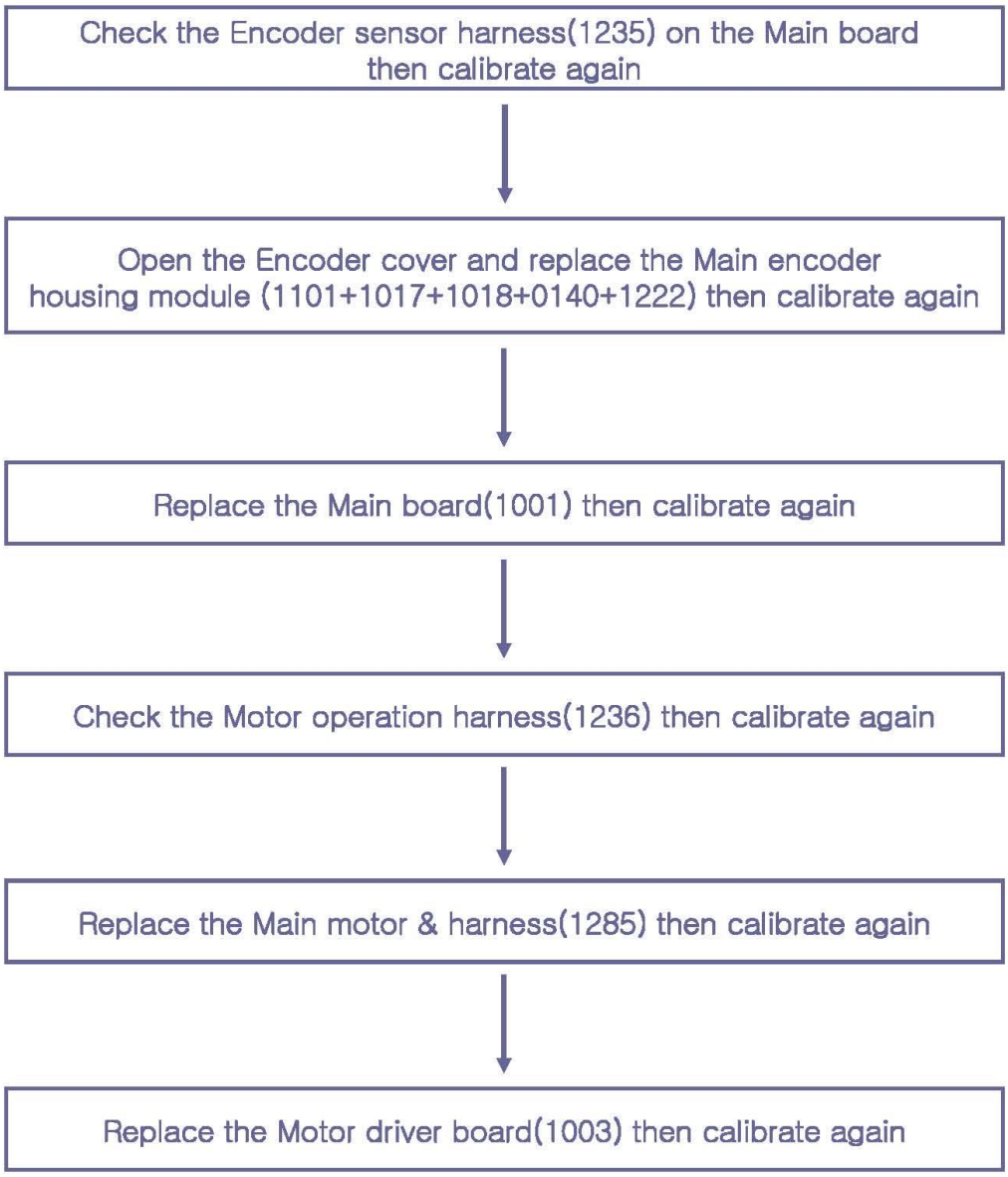

CALIBRATION PROBLEM

CF PART : UV calibration

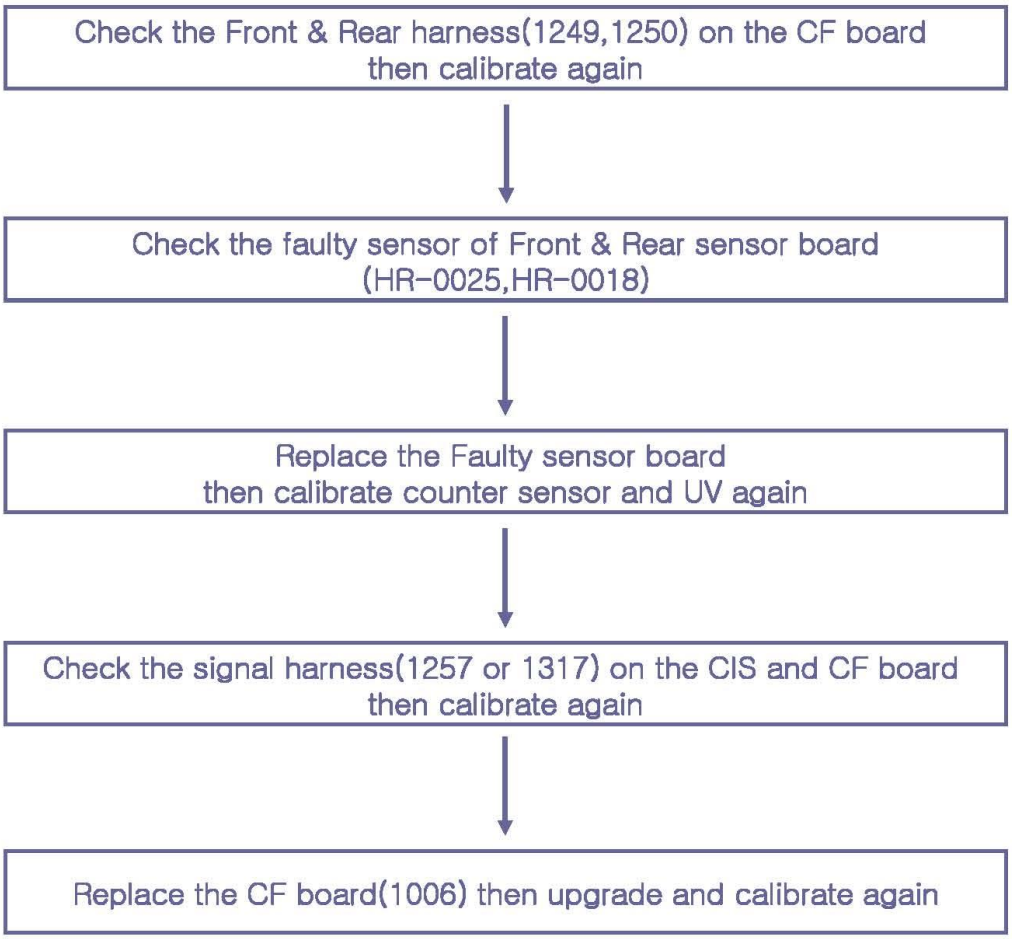

CALIBRATION PROBLEM

CF PART : Magnetic sensor

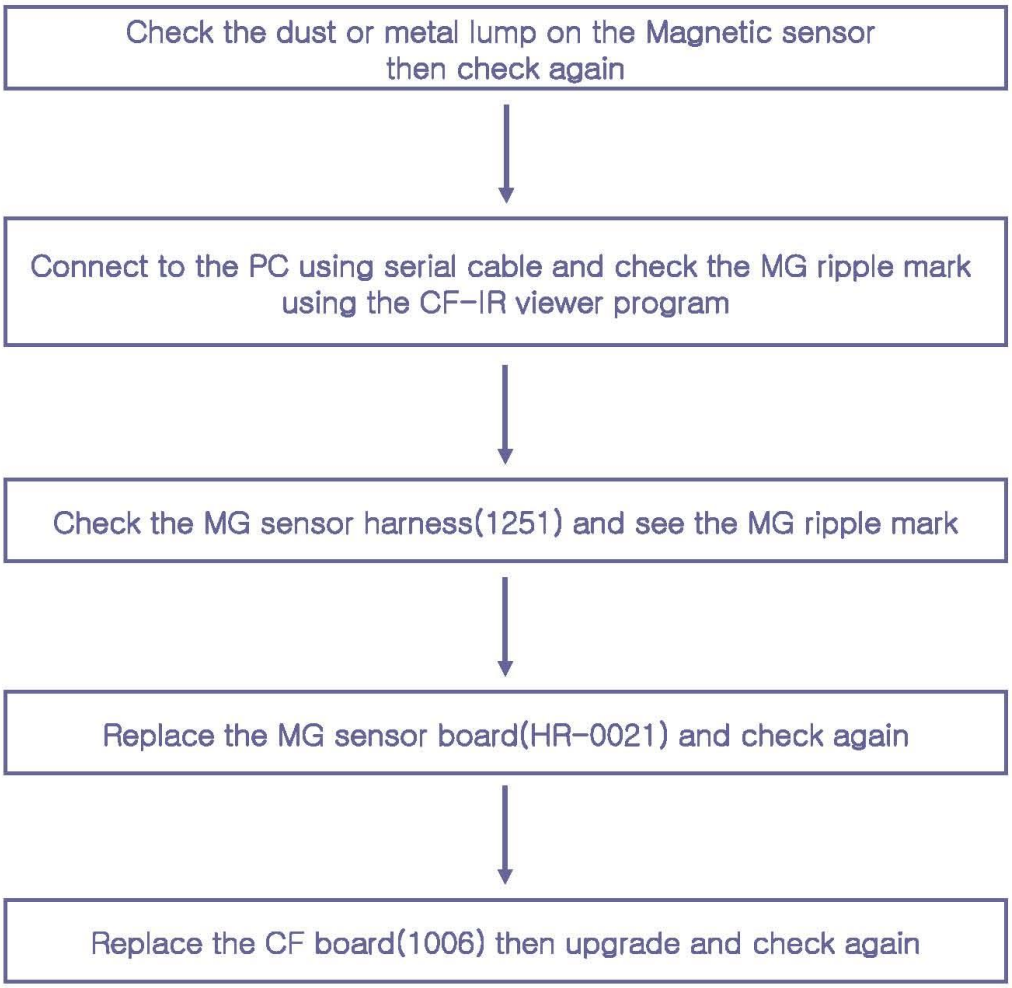

CALIBRATION PROBLEM

IR PART : IR calibration

Check the IR harness(1310~1318) on the each board
then calibrate again

↓

Connect to the PC using serial cable and check the IR image
using the CF-IR viewer program

↓

Replace the Faulty sensor board(HR-0059 or HR-0060)
then calibrate again

↓

Check the signal harness(1257 or 1317) on the CIS and CF board
then calibrate again

↓

Replace the IR board(1027) then upgrade and calibrate again

CALIBRATION PROBLEM

CIS PART : CIS calibration

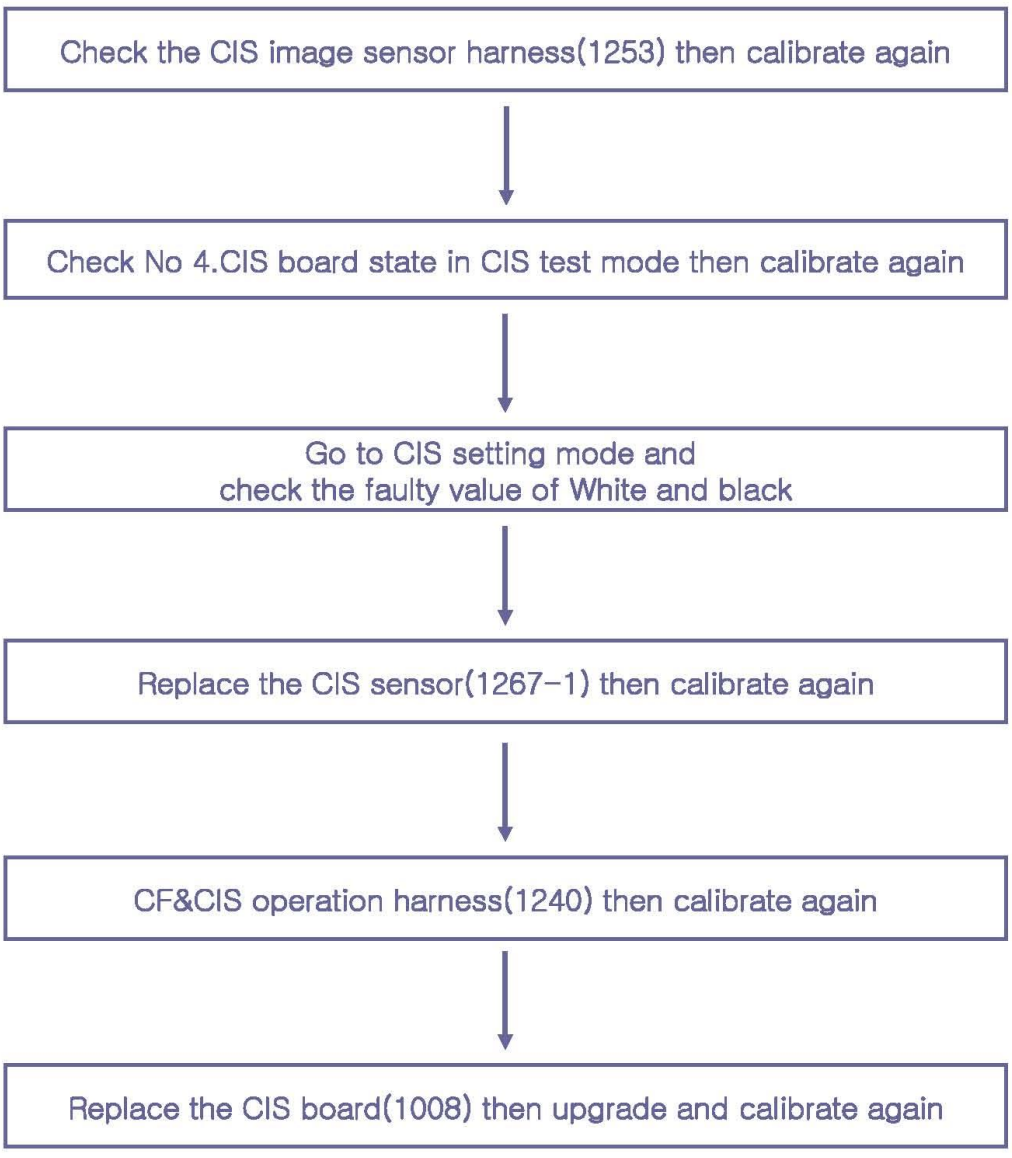

COMMUNICATION PROBLEM

- **Select detail item that caused problem**

▶ Cannot communicate between machine and PC or Controller

▶ Cannot communicate between machine and Printer

▶ Cannot open the serial port

▶ Cannot open the USB port

COMMUNICATION PROBLEM

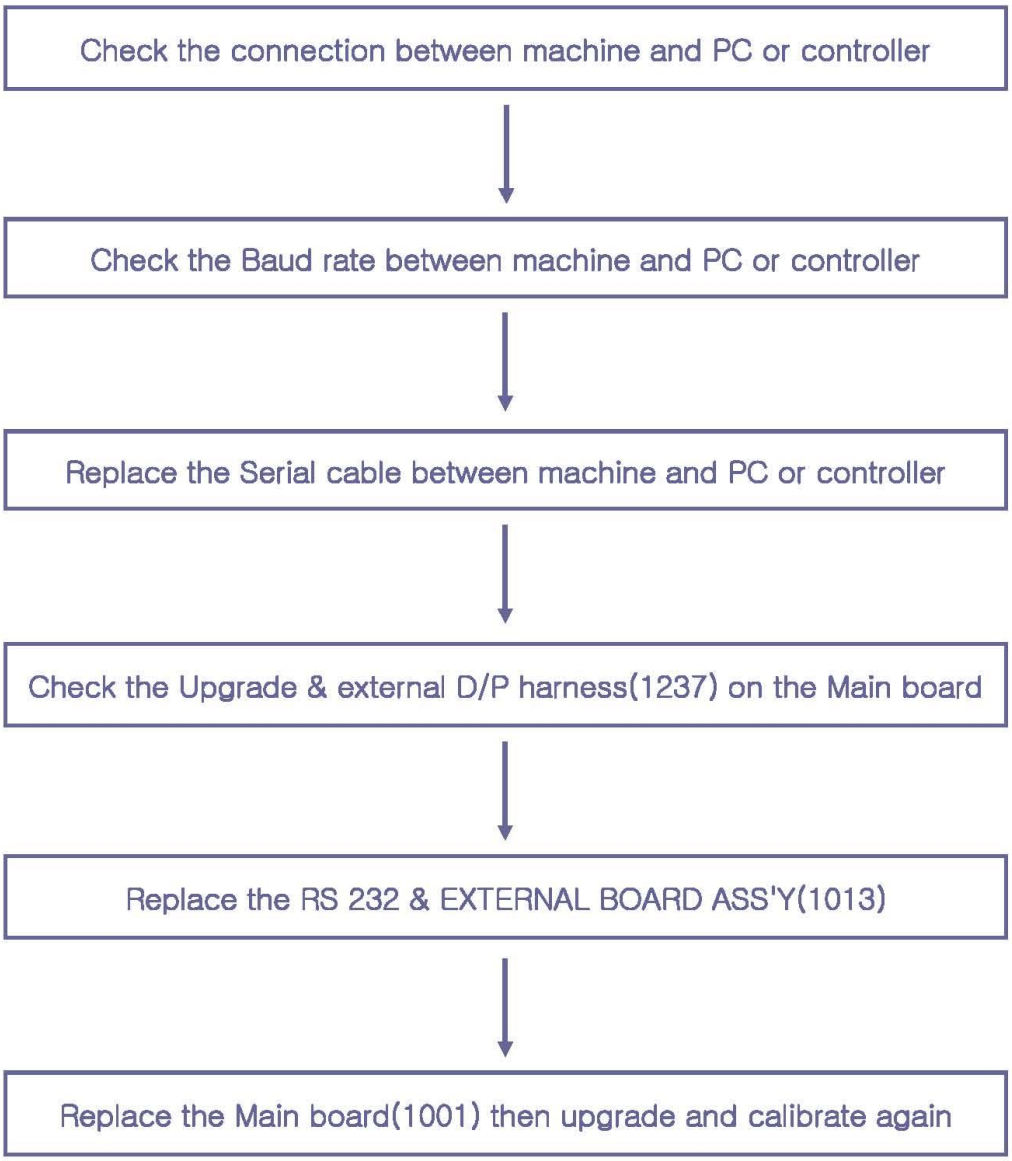

DISPLAY PROBLEM

- **Select detail item that caused problem**

▶ Not displayed any character on the screen
▶ Flicker on and off backlight or character on the screen
▶ Show character but turn off the backlight on the screen
▶ Not displayed any character on the External display

DISPLAY PROBLEM

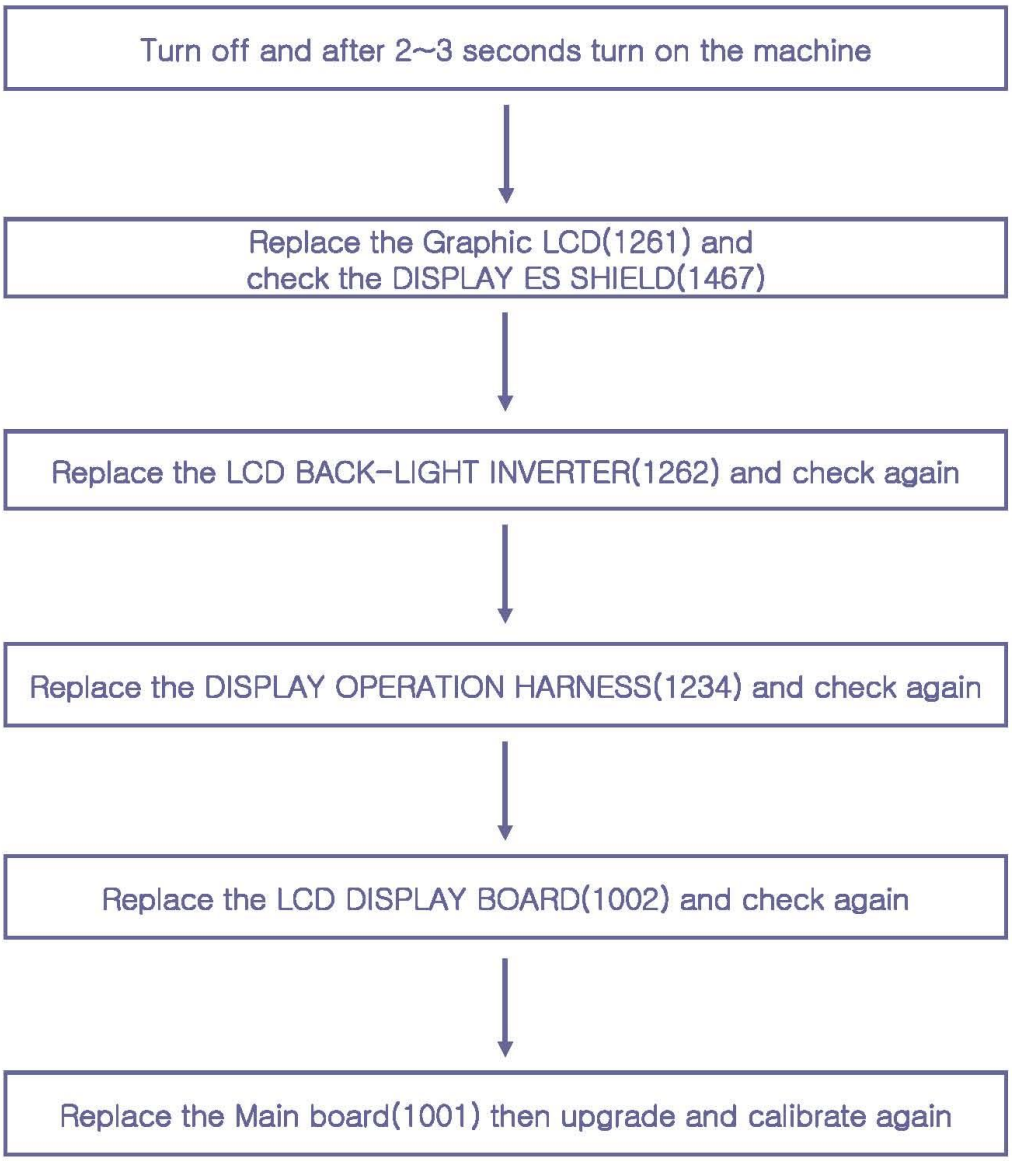

KEY PROBLEM

- **Select detail item that caused problem**
  - ▶ Not operate the key when press a certain key
  - ▶ Have a contact problem when press a certain key

KEY PROBLEM

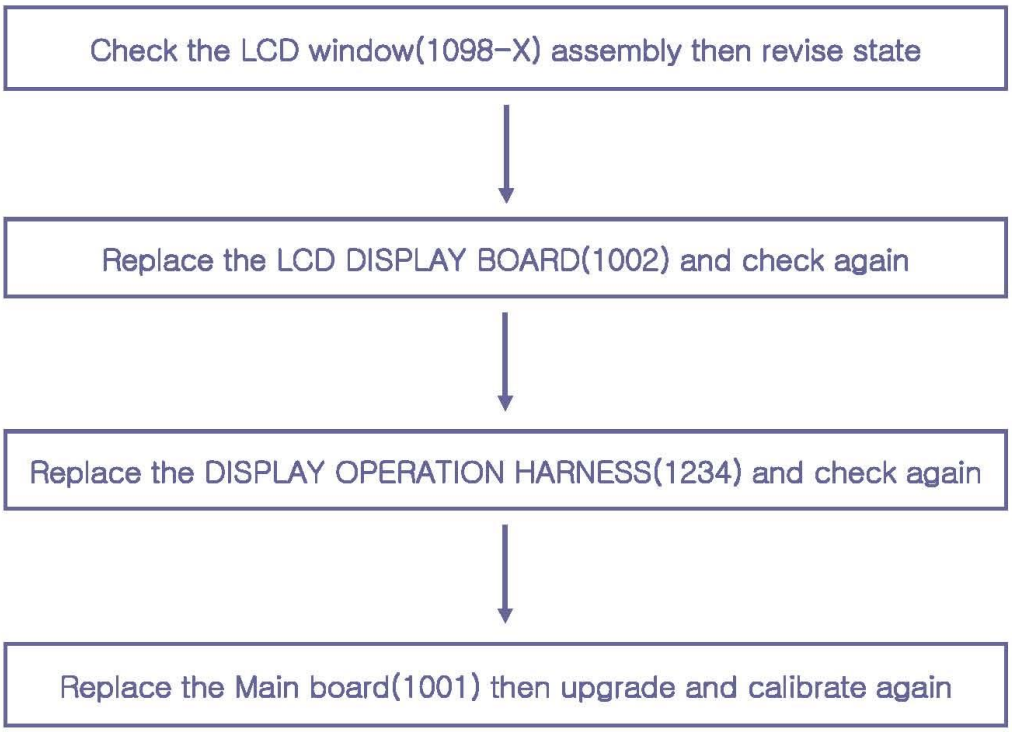
Check the LCD window(1098-X) assembly then revise state
Replace the LCD DISPLAY BOARD(1002) and check again
Replace the DISPLAY OPERATION HARNESS(1234) and check again
Replace the Main board(1001) then upgrade and calibrate again

MECHANICAL PROBLEM

- **Select detail item that caused problem**

▶ Make a noise while counting notes

▶ Jammed a note frequently while counting notes

Ⅰ.Split roller position

Ⅱ.IR sensor position

Ⅲ.Sorting cam position

MECHANICAL PROBLEM

NOISE PROBLEM

Open the Front cover and
check the Stacker drive roller unit (HR-0045)

↓

Remove the dust lump on the Stacker drive roller unit(HR-0045)

↓

Remove the dust lump on the REJECT POCKET
TENSION ROLLER(0010,1130)

MECHANICAL PROBLEM

JAM PROBLEM : Split roller position

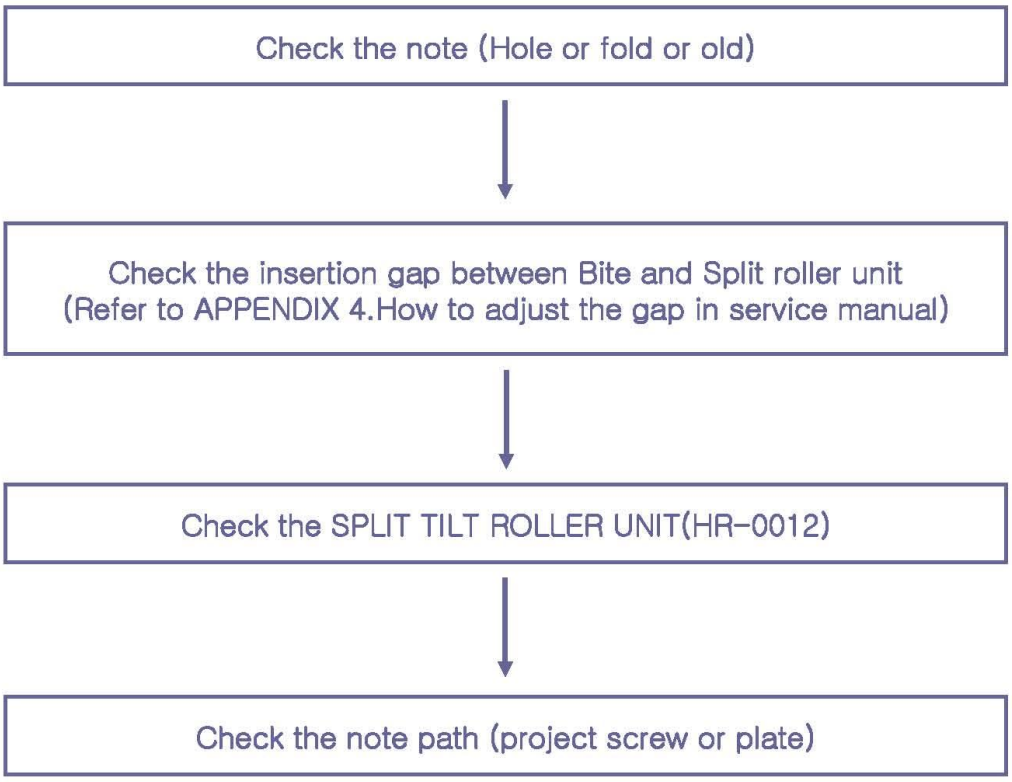

MECHANICAL PROBLEM

JAM PROBLEM : IR sensor position

Check the note (Tear or taped or scribble or paint)

↓

Check the note path (project screw or plate)

MECHANICAL PROBLEM

JAM PROBLEM : Sorting cam position

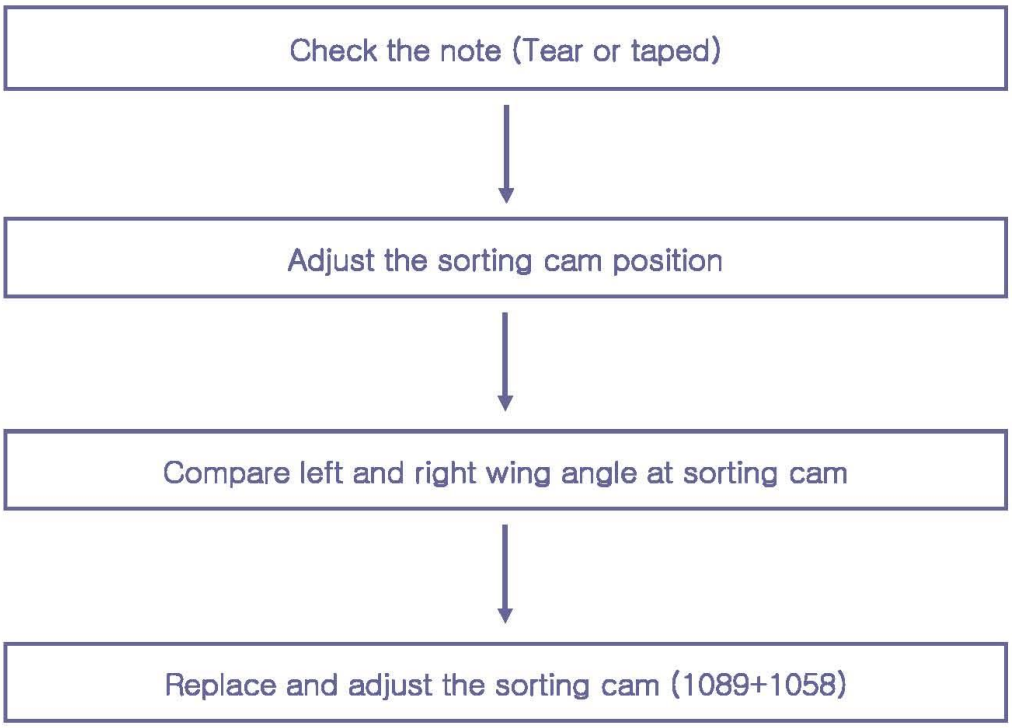

MOTOR PROBLEM

- **Select detail item that caused problem**

▶ Turn the Motor continuously after counting notes

▶ Turn the Motor continuously when turn on the machine

▶ Turn the Main or Sub motor abnormally

▶ Not operate the Main Motor when put the note on the Hopper

▶ Not operate the Sub Motor while counting notes

MOTOR PROBLEM

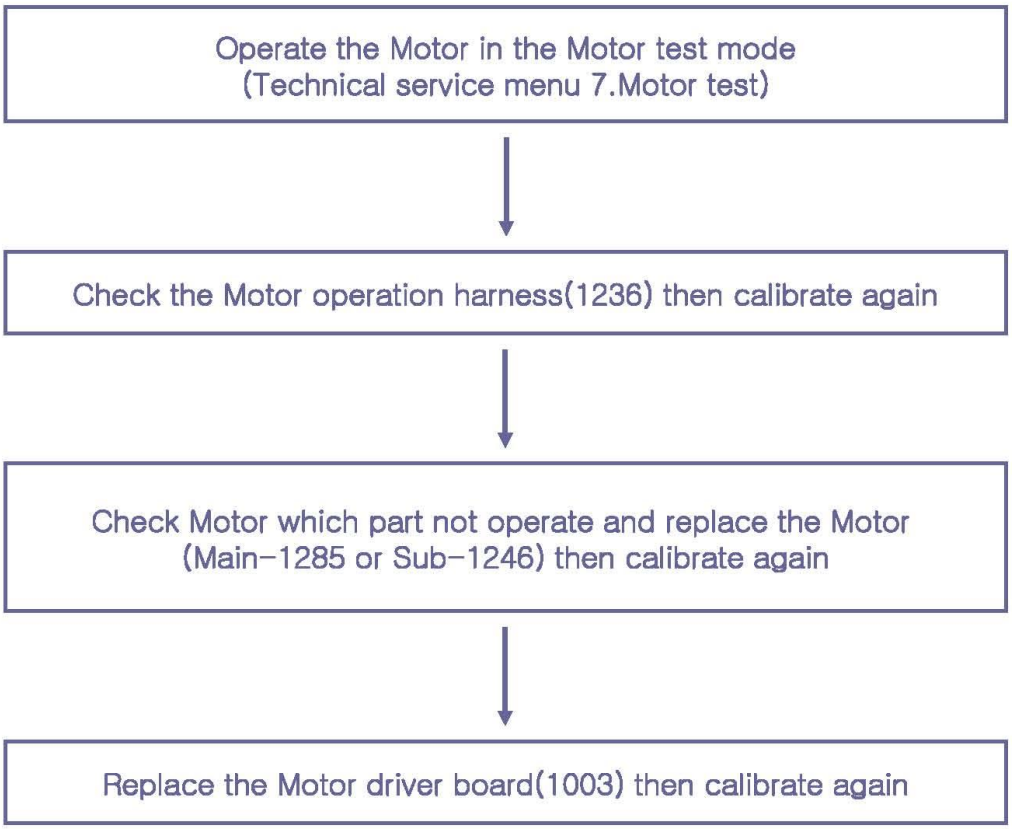

POWER PROBLEM

- **Select detail item that caused problem**

▶ Cannot turn on the Power when you turn switch on

▶ Not turn on the 24V power (Motor & Solenoid & FAN)

▶ Not turn on the 7V power (Main and CIS, CF board)

▶ Not turn on the 5V power (Main and CIS, CF board)

POWER PROBLEM

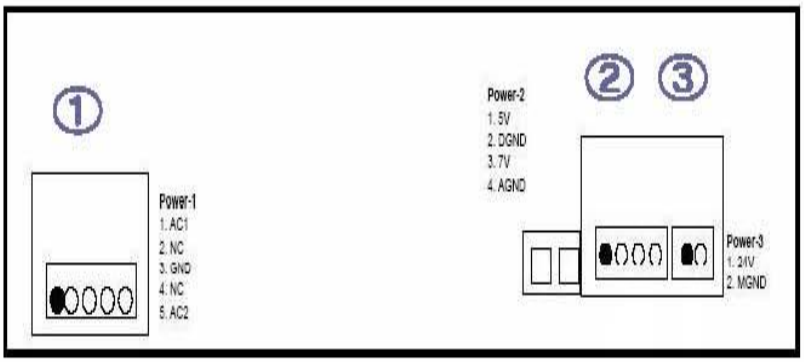

Check the AC power(110V or 220V) harness ① using the Voltage checker

↓

Check the DC power(5V and 7V) harness ② using the Voltage checker

↓

Check the DC power(24V) harness ③ using the Voltage checker

↓

Replace the SMPS(1265) unit

REJECT PROBLEM

- **Select detail item that caused problem**
  - ▶ Reject many or all notes while counting notes
  - ▶ Reject many or all notes in Serial mode
  - ▶ Increase rejection rate after counting a few hours

REJECT PROBLEM

1.Reject many or all notes while counting notes

Do not remove the reject note after counting and check the Error code

Check the procedure of each error referring the Service manual

REJECT PROBLEM

2.Reject many or all notes in serial mode

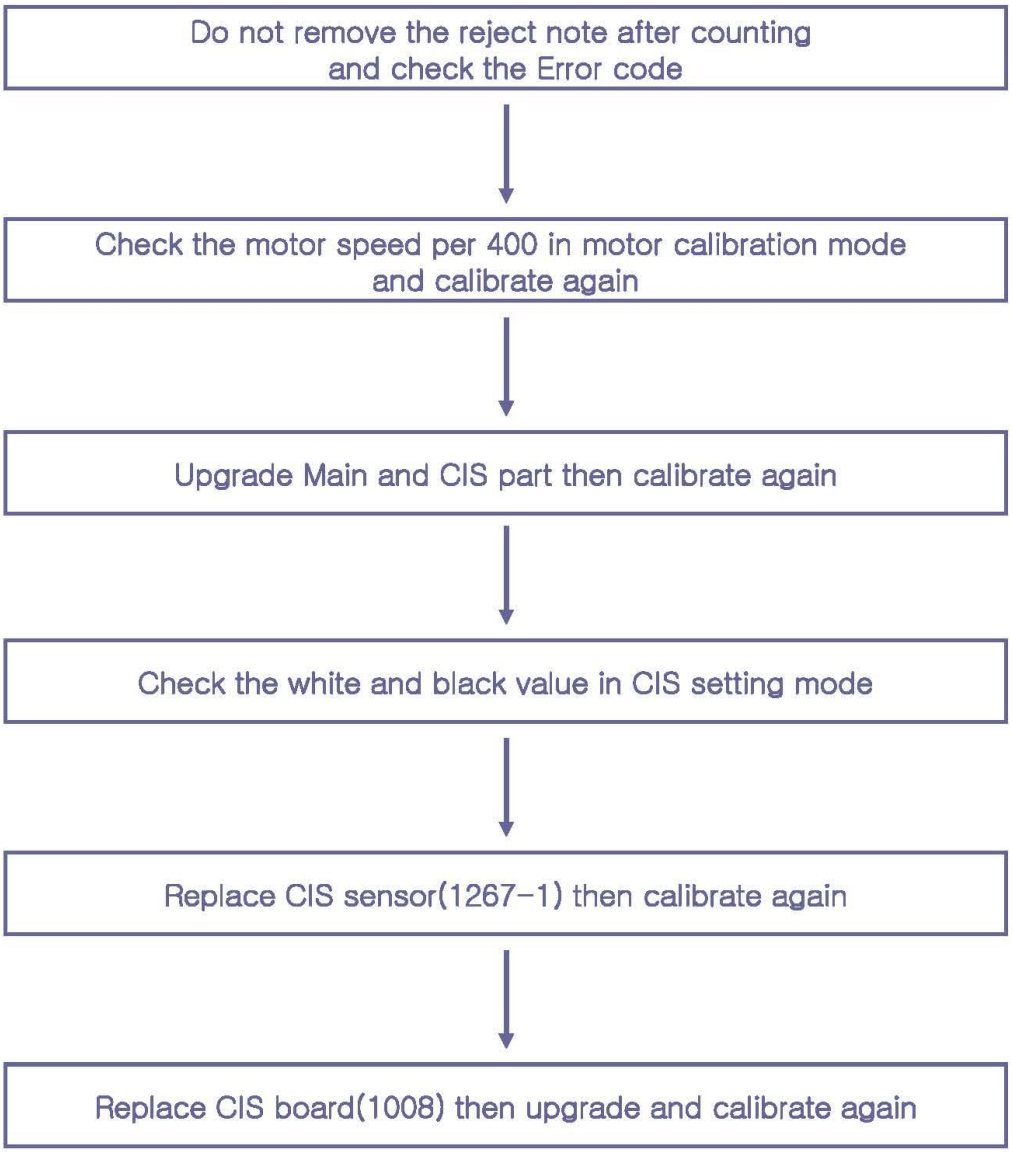

REJECT PROBLEM

3.Increase rejection rate after counting a few hours

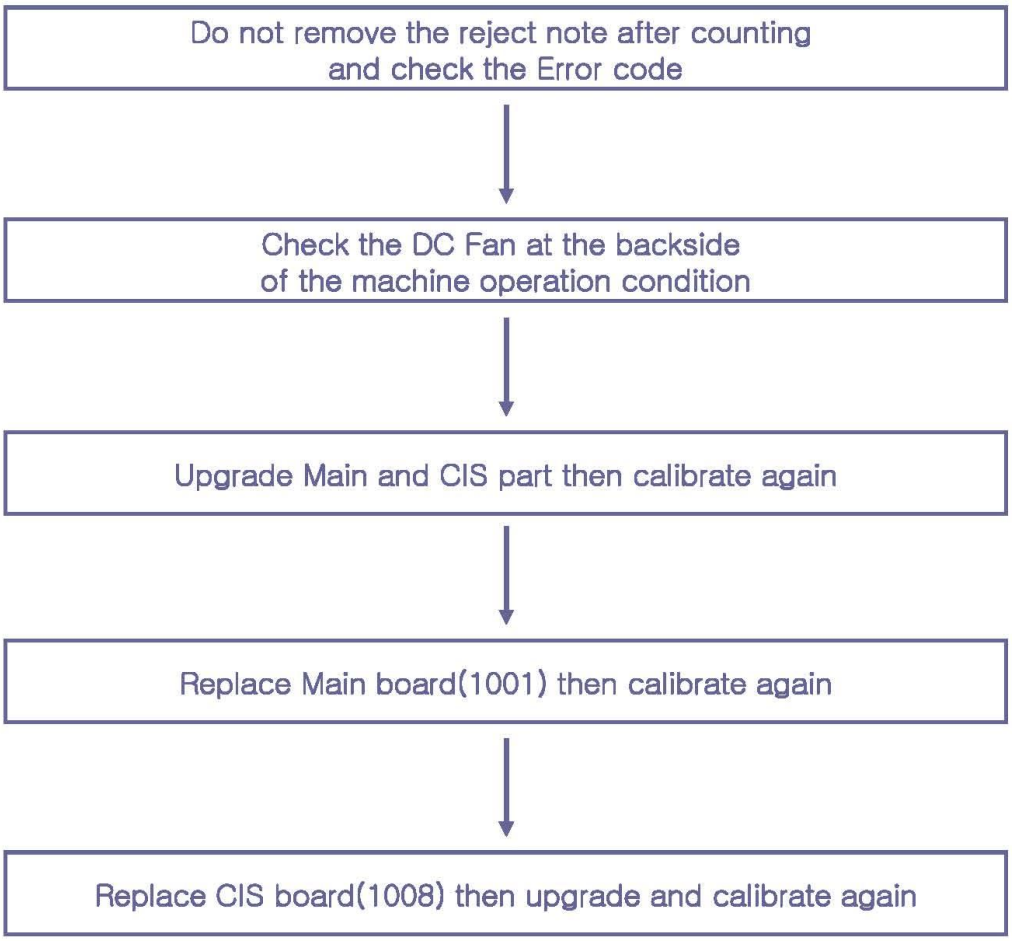

SENSOR PROBLEM

- Select detail item that caused problem
  - Count Sensor
    - Ⅰ.CIS count sensor
    - Ⅱ.Main count sensor
    - Ⅲ.Reject count sensor
  - CIS Sensor
  - IR Sensor
  - Encoder Sensor
  - Back cover Sensor
  - Hopper Sensor
  - Stacker Sensor
  - Reject Sensor

SENSOR PROBLEM

CIS counter sensor

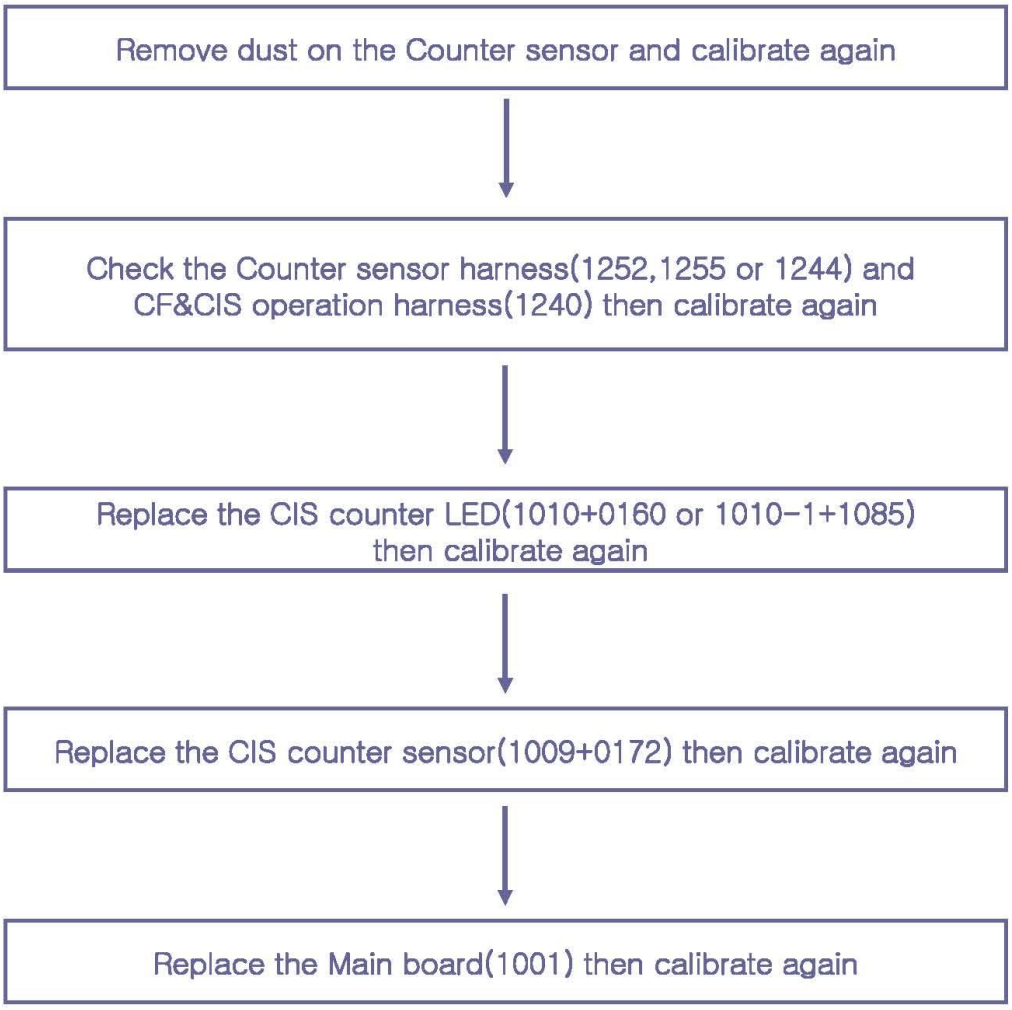

SENSOR PROBLEM

Main counter sensor

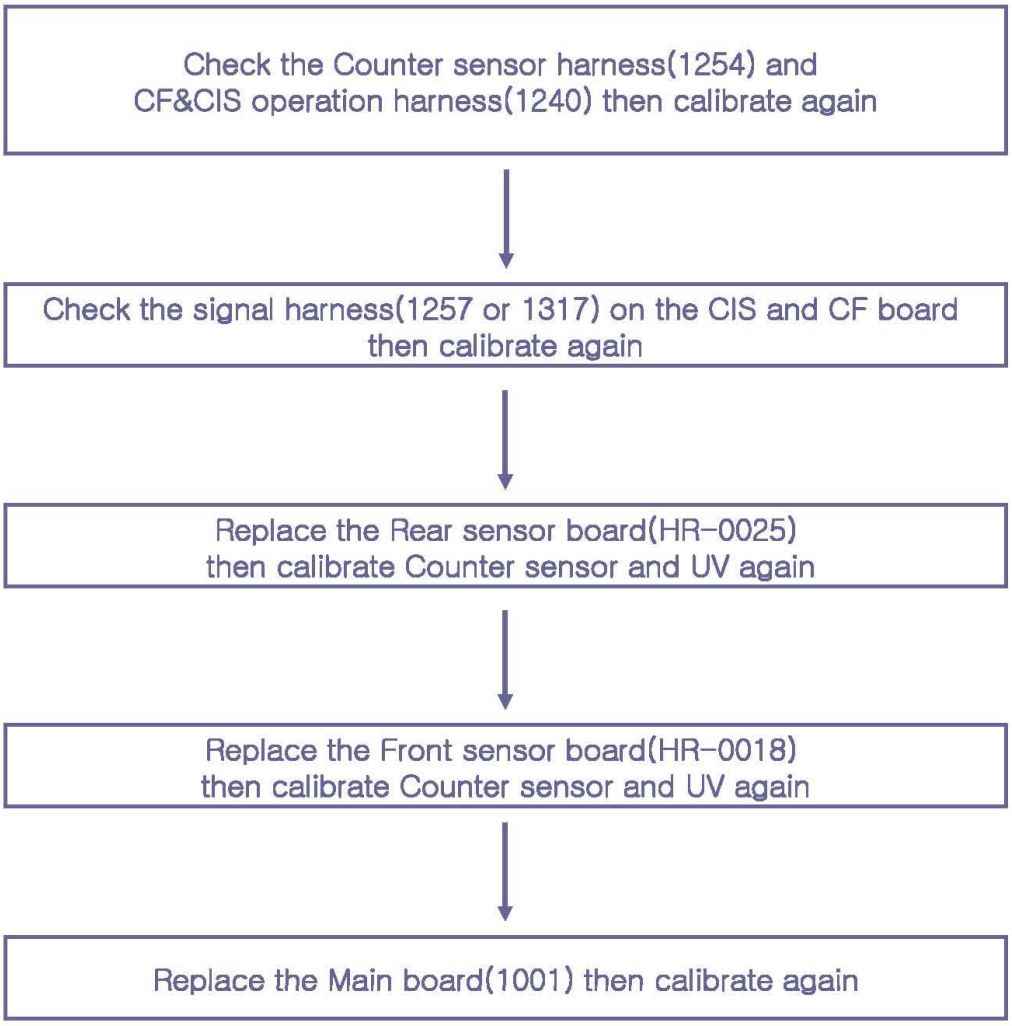

SENSOR PROBLEM

Reject counter sensor

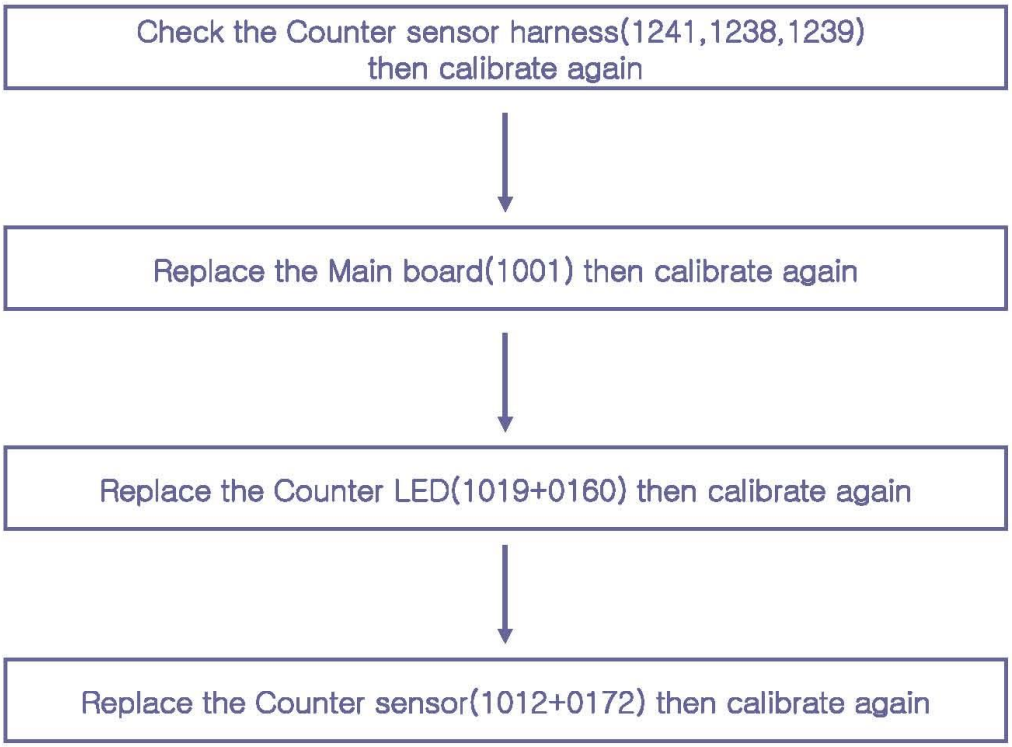

SENSOR PROBLEM

CIS SENSOR

Open the Rear cover then clean the CIS front side and CIS sensor using the cleaning cloth

↓

Turn off and turn on the machine then check the CIS sensor condition in CIS setting mode

↓

Check the CIS IMAGE SENSOR HARNESS (1253)

↓

Replace the CIS sensor (1267-1) and calibrate again

↓

Check the CIS board state in CIS test mode
4.CIS BOARD STATUS MODE

SENSOR PROBLEM

IR SENSOR

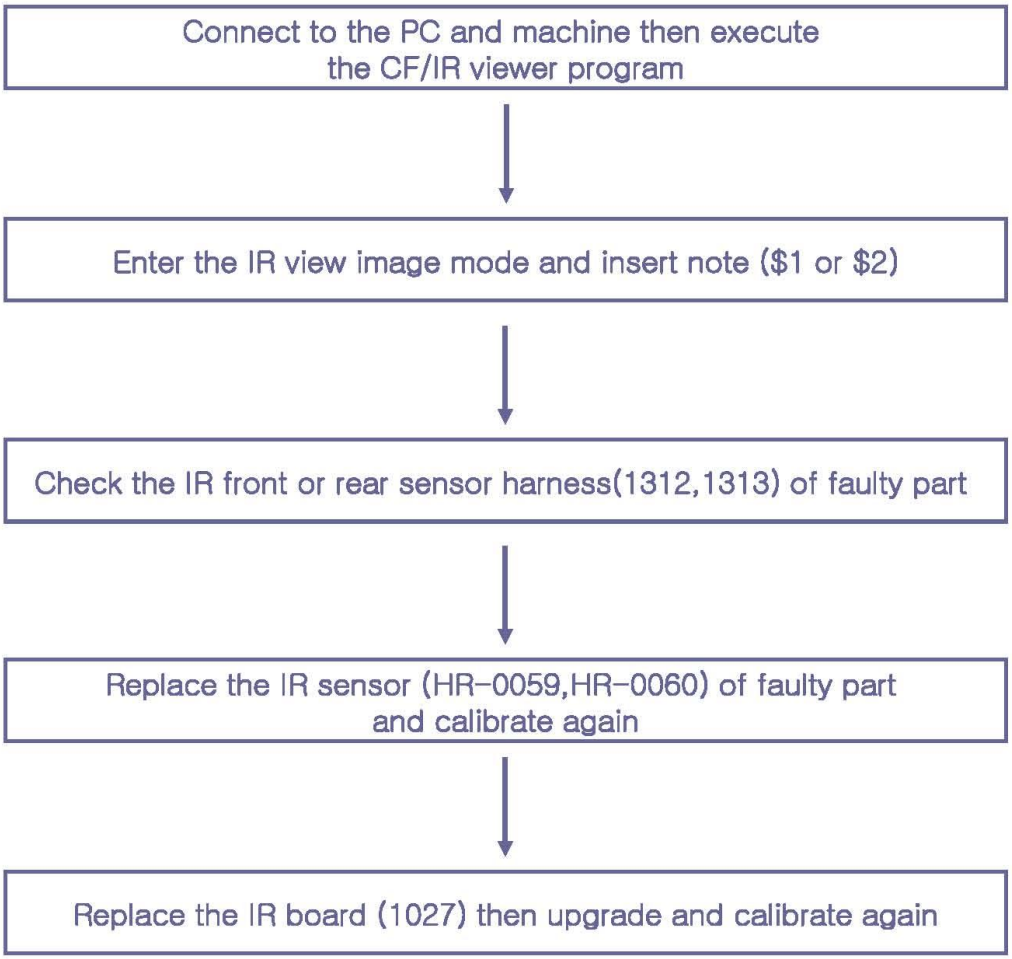

SENSOR PROBLEM

ENCODER SENSOR

Check the Encoder setup in the Technical service menu
8.ENCODER TEST & ADJUSTING

↓

Check the MAIN ENCODER HARNESS (1235) and
bending extend of MAIN ENCODER (1281)

↓

Replace the MAIN ENCODER HOUSING MODULE
(1101+1017+1018+0140+1222) then setup the encoder value
using two screws position

↓

Replace Main board (1001) then upgrade and calibrate again

SENSOR PROBLEM

BACK COVER SENSOR

Check the Back cover sensor condition in 2.H,S,R,B sensors of Main part (Mentioned Back C. normal : 0, opened : 4100)

↓

Open the LOWER SIDE LEFT COVER (1363) then check the FRAME SENSOR BOARD (0269+0179-1) assembly

↓

Replace the FRAME SENSOR BOARD (0269+0179-1) then check the Back cover sensor condition in 2.H,S,R,B sensors of Main part

↓

Replace Main board (1001) then upgrade and calibrate again

SENSOR PROBLEM

HOPPER SENSOR

Check the Hopper sensor condition in 2.H,S,R,B sensors of Main part
(Mentioned normal : 0, detected : 4100)

↓

Disassemble the Front cover unit (HR-0036) then replace
the HOPPER SENSOR BOARD (1016+0179) and check
the Hopper sensor condition in 2.H,S,R,B sensors of Main part

↓

Check the HOPPER SENSOR HARNESS (1244)
and DISPLAY OPERATION HARNESS (1234)

↓

Replace Main board (1001) then upgrade and calibrate again

SENSOR PROBLEM

STACKER SENSOR

Remove the dust on the stacker sensor and check the stacker sensor condition in 2.H,S,R,B sensors of Main part (Mentioned normal : 4100, detected : 0)

↓

Replace the STACKER LED BOARD (0174+0172) and check again the stacker sensor condition

↓

Replace the STACKER SENSOR BOARD (1020+0172) and check again the stacker sensor condition

↓

Replace Main board (1001) then upgrade and calibrate again

SENSOR PROBLEM

REJECT SENSOR

Check the reject sensor condition in 2.H,S,R,B sensors of Main part
(Mentioned normal : 0, detected : 4100)

↓

Disassemble the Front cover unit (HR-0036) then replace
the REJECT SENSOR BOARD UNIT (HR-0029)
and check again the reject sensor condition

↓

Replace Main board (1001) then upgrade and calibrate again

SOLENOID PROBLEM

- **Select detail item that caused problem**

▶ Not operate the Separator (Solenoid)

▶ Not come out any notes to the Reject pocket

SOLENOID (Swing selector) PROBLEM

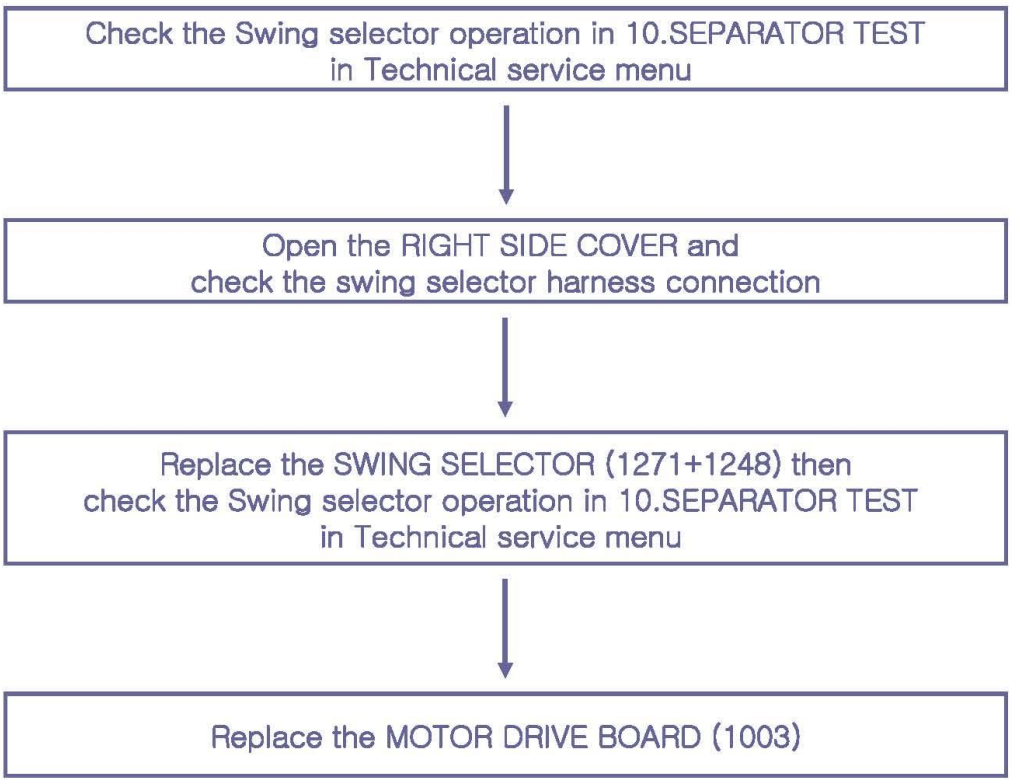

UPGRADE PROBLEM

- Select detail item that caused problem

▶ Cannot upgrade only Main part

▶ Cannot upgrade only CIS part

▶ Cannot upgrade only CF part

▶ Cannot upgrade only IR part

▶ Cannot open USB port

▶ Cannot add new function (not matched serial number)

UPGRADE PROBLEM

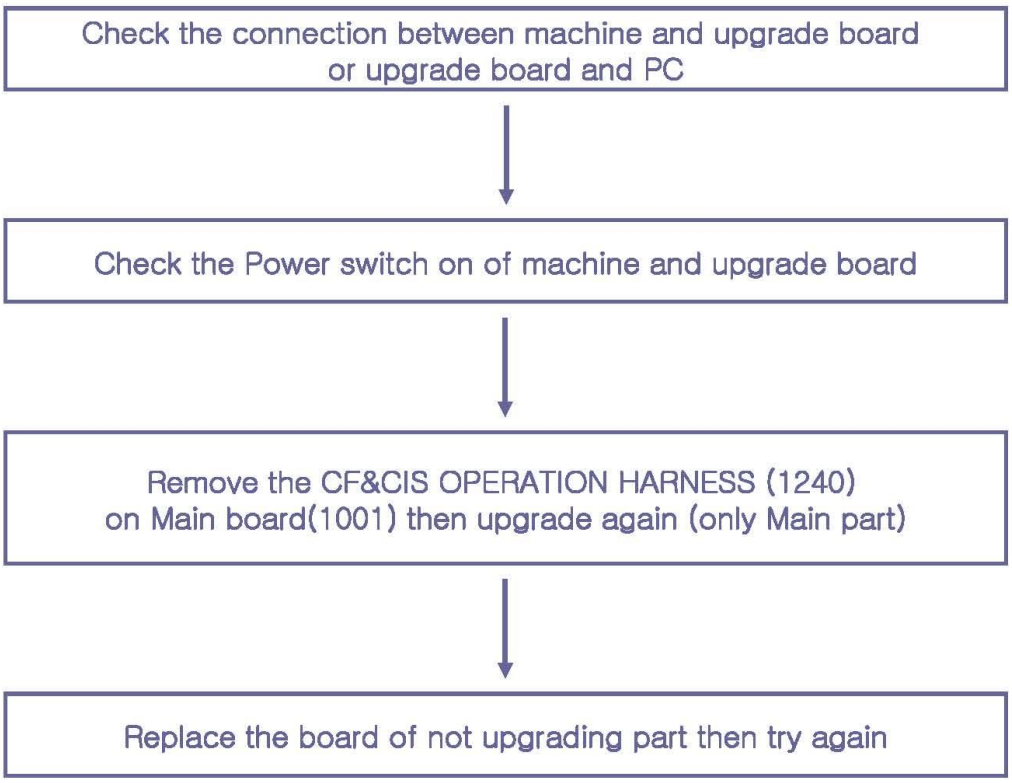

UPGRADE PROBLEM

Not matched serial number

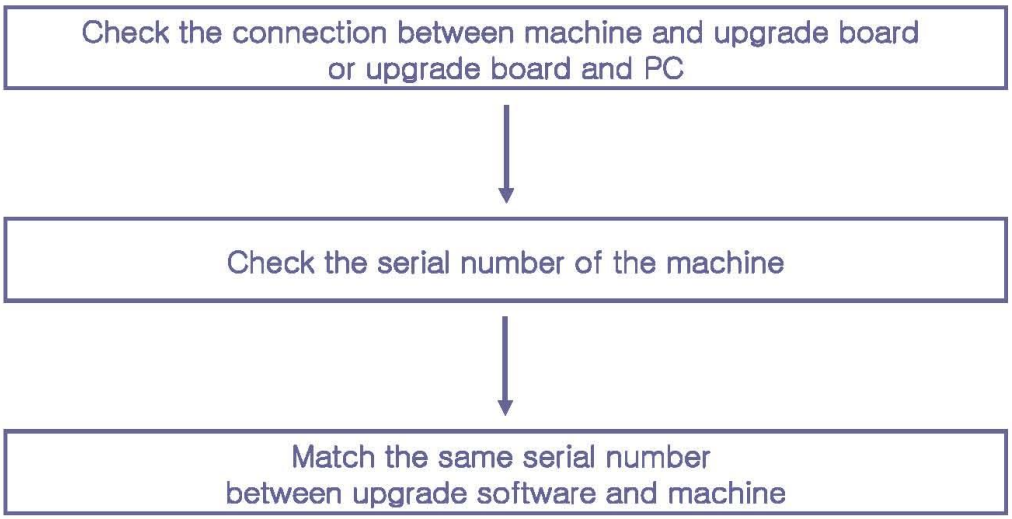

9-3. ADJUST GAP

9-3-1. GAP KNOB ADJUSTMENT

If it happens CIS skew error or Jam error frequently, adjust the GAP wider by turning the Gap Adjustment Knob clockwise slightly.

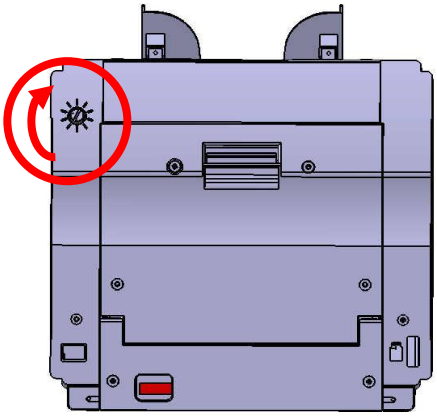

In serial number print mode, If the inserted gap is narrow, display shows as below.

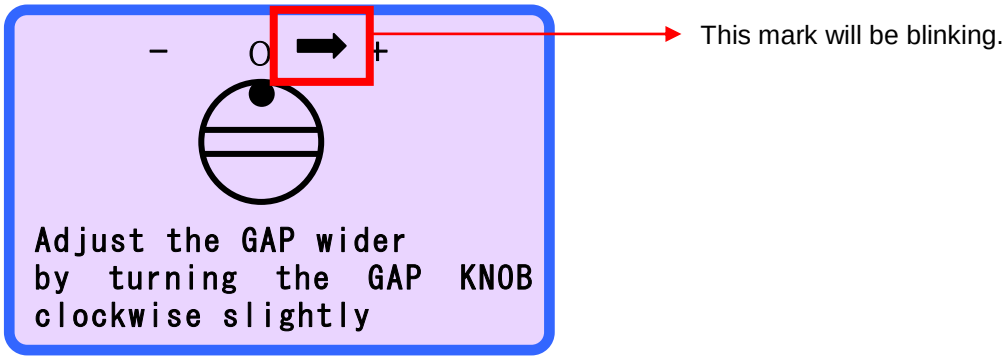

If you want to finish the gap adjusting, press **RESTART** key.

9-3-2. HOW TO ADJUST GAP

1. Disassemble a machine as shown in the picture.

Wrench 7mm Spanner NEW note

3. Check if B is placed in A.

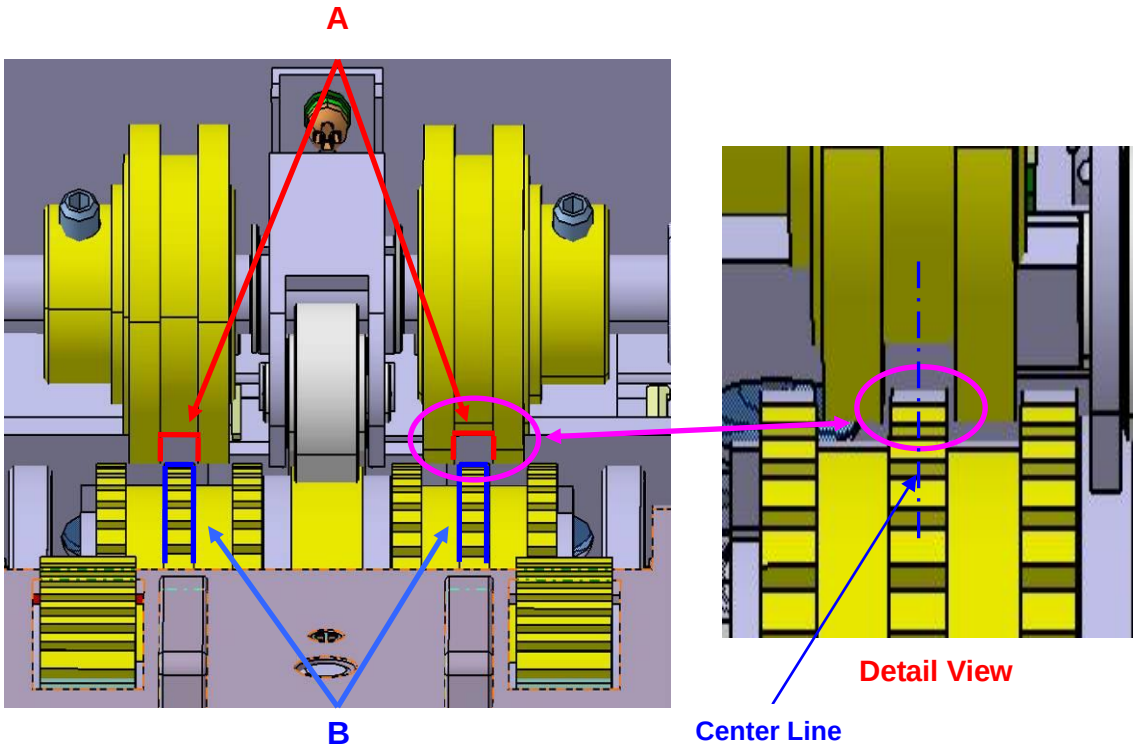

If B is not placed in A, loose two socket set screws in the direction of the arrow with 2.5mm Wrench.

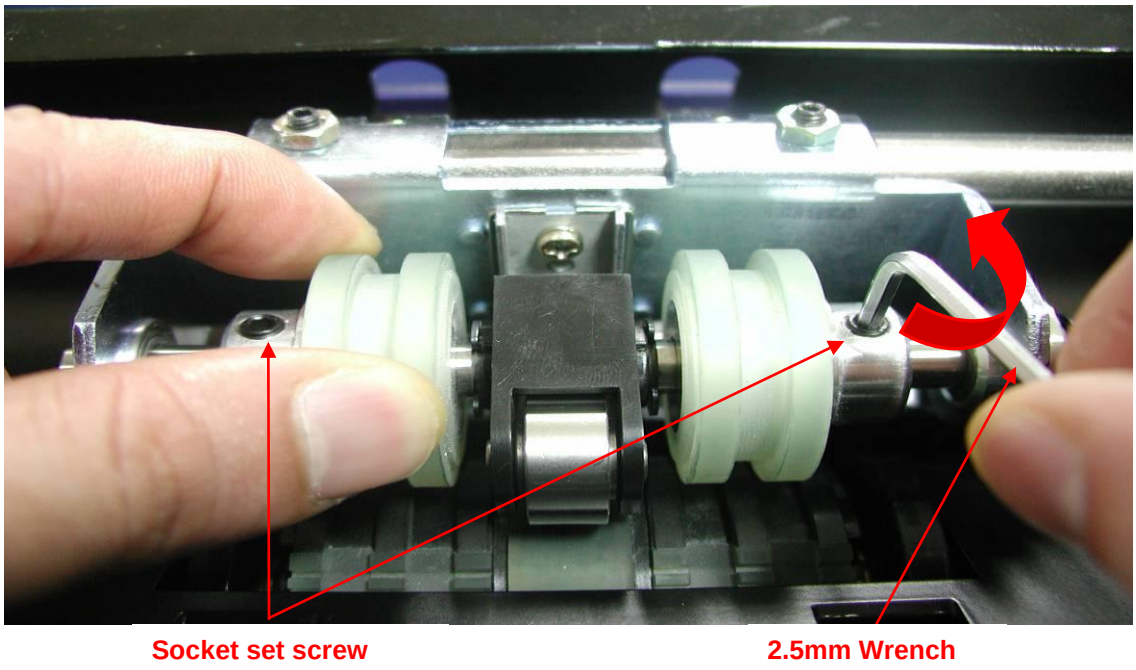

After making Main (Bite) roller be placed in Stopper (Split) roller, Fasten two Socket set screws in the direction of the arrow with 2.5mm Wrench.

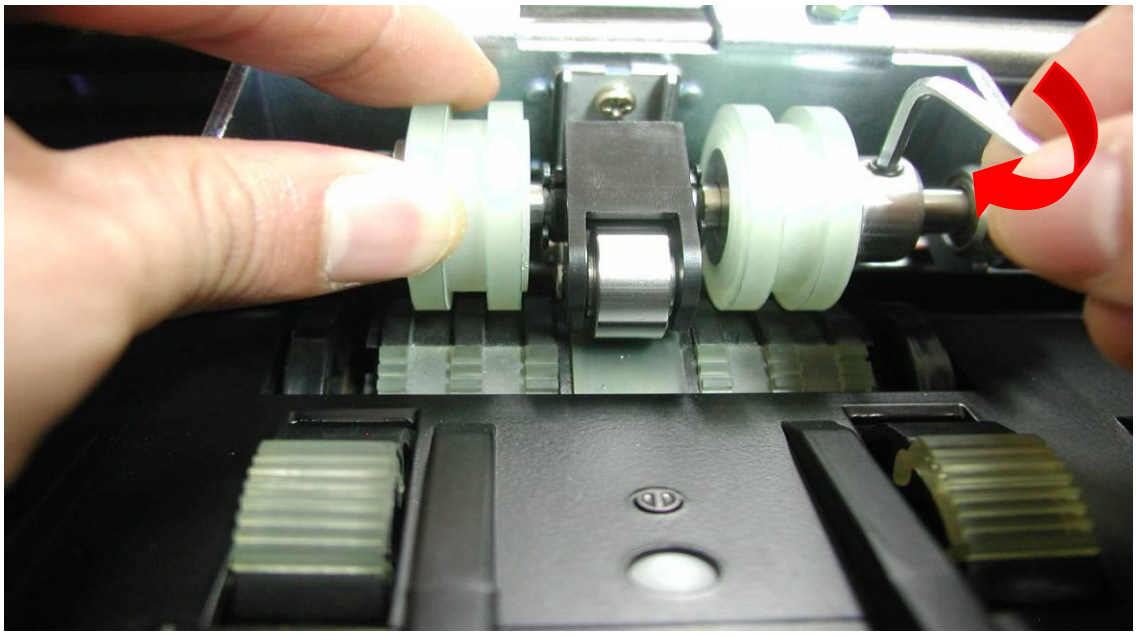

4. Make main (Bite) roller located as shown in the picture.

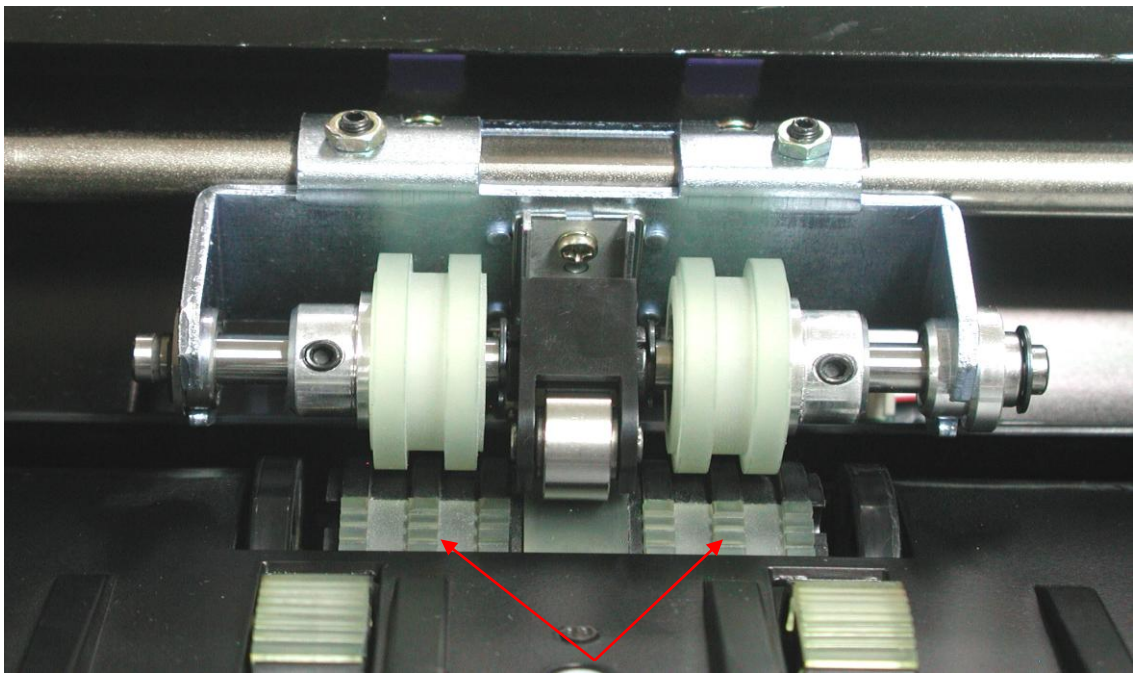

Main (Bite) roller

When inserting new note into the input receptacle as shown in the picture,
if the left or the right side is tight, you should set the tight side up again.
(In this manual, we assume that the right side is tight.)

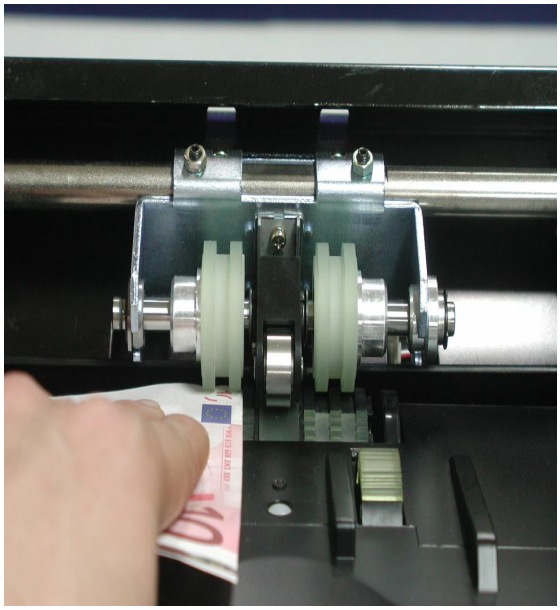

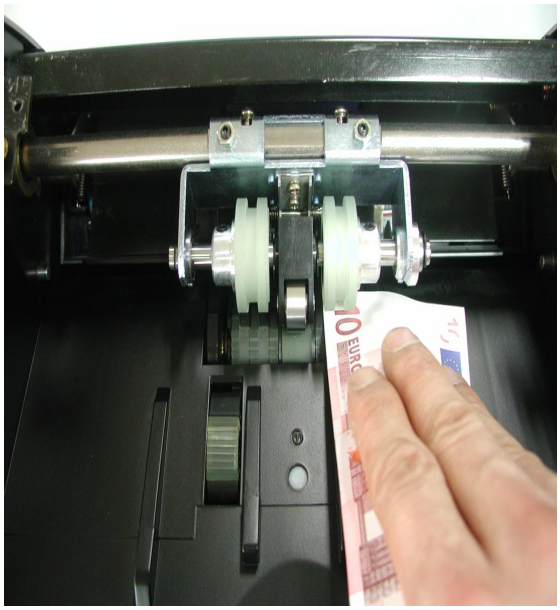

5. After putting Wrench into the right Socket set screw which is fastened at the head of assembly, fix the Wrench by hand to prevent it from moving.

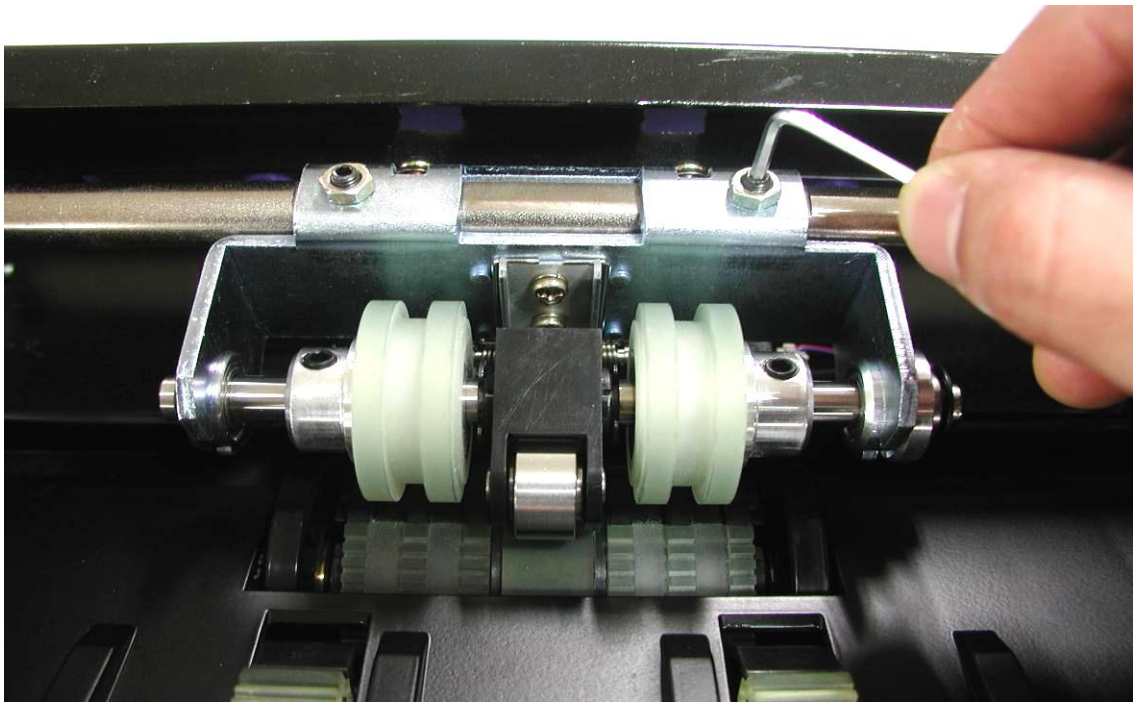

6. Turn M4 Nut counterclockwise (CCW) with a 7mm spanner, loose it slightly and hold the Spanner to prevent it from moving.

If you turn the Wrench CW, the Gap between Stopper (split) roller and main (Bite) roller will be widened.

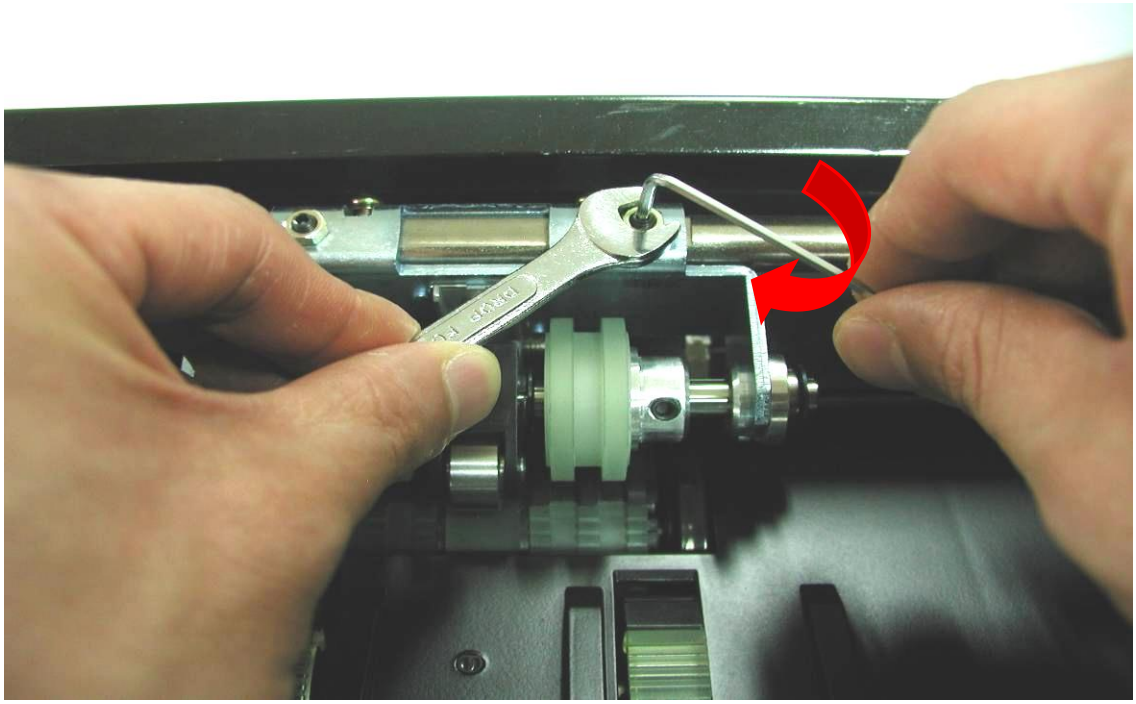

8. Hold the Wrench which is inserted in the Socket set screw to prevent it from moving and fasten M4 Nut with 7mm Spanner.

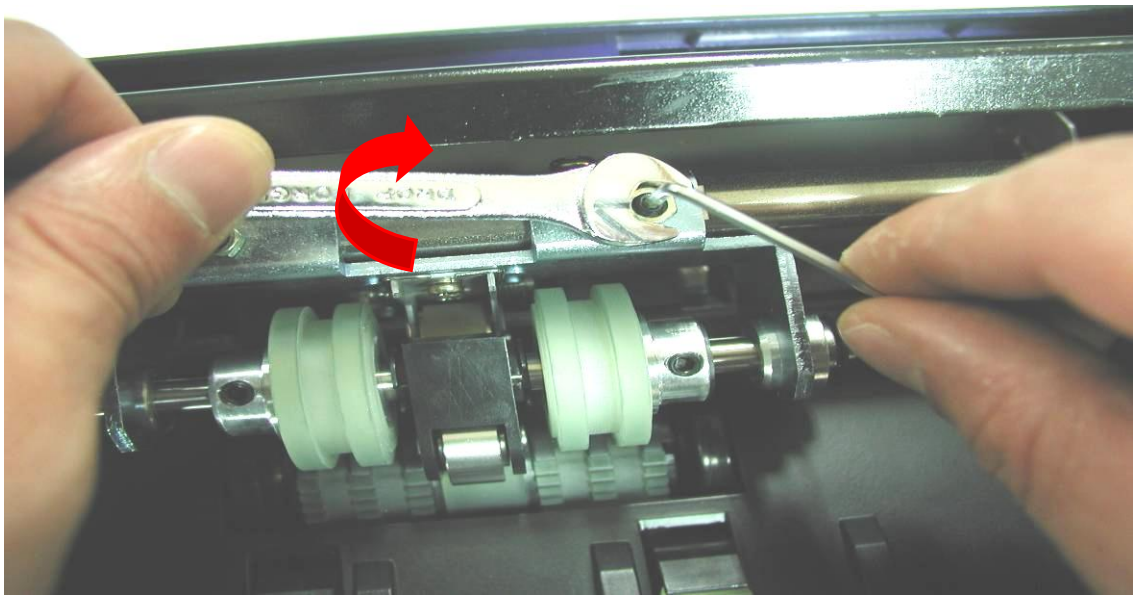

9. After finishing the set-up of the note input receptacle, make main (Bite) roller located as shown in the picture.

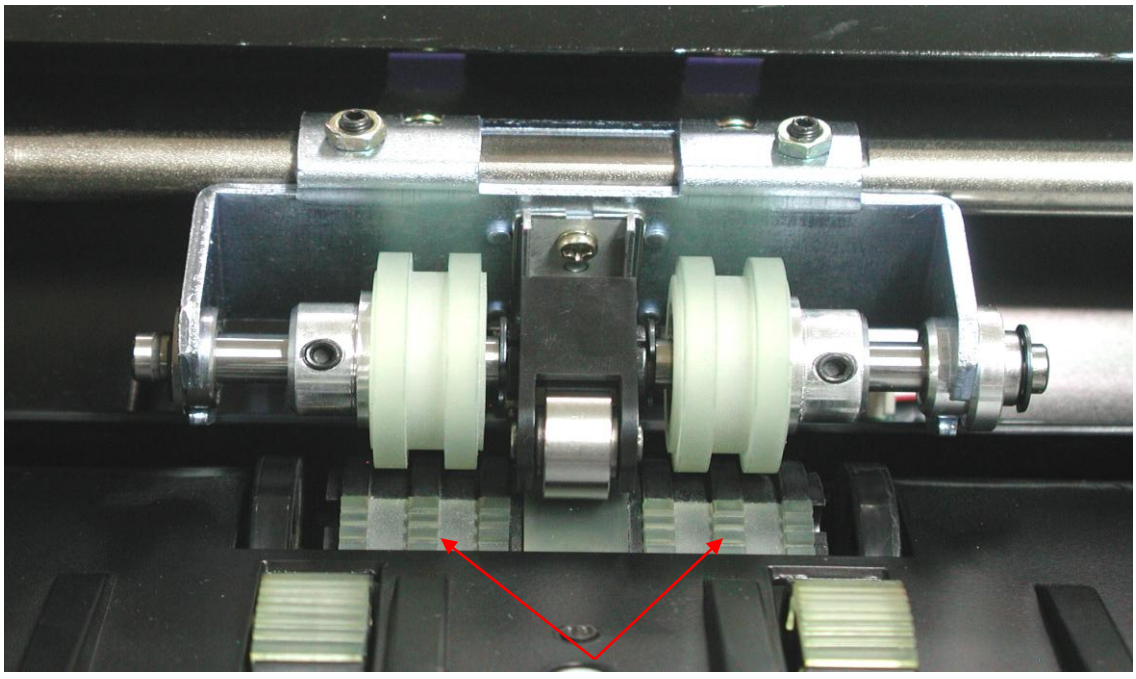

Main (Bite) roller

10. Try to insert the new note into the input receptacle as shown in the picture.

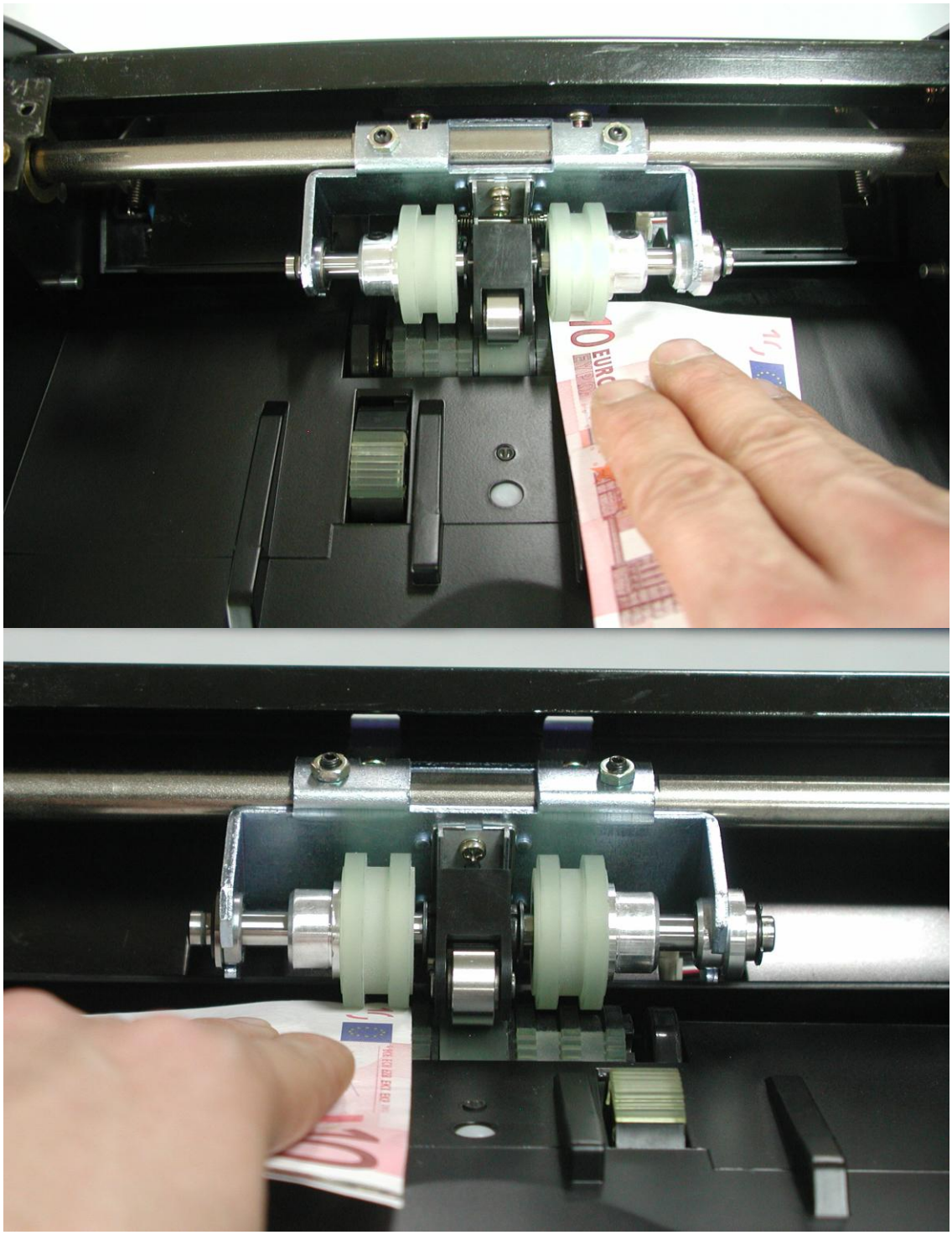

11. When inserting a new note into both sides of Bite Roller, the both gaps (the tight feeling) should be almost the same.
But, if the Gap is either too tight or too loose, when you use the machine to count a bundle of notes, the count errors will happen frequently.

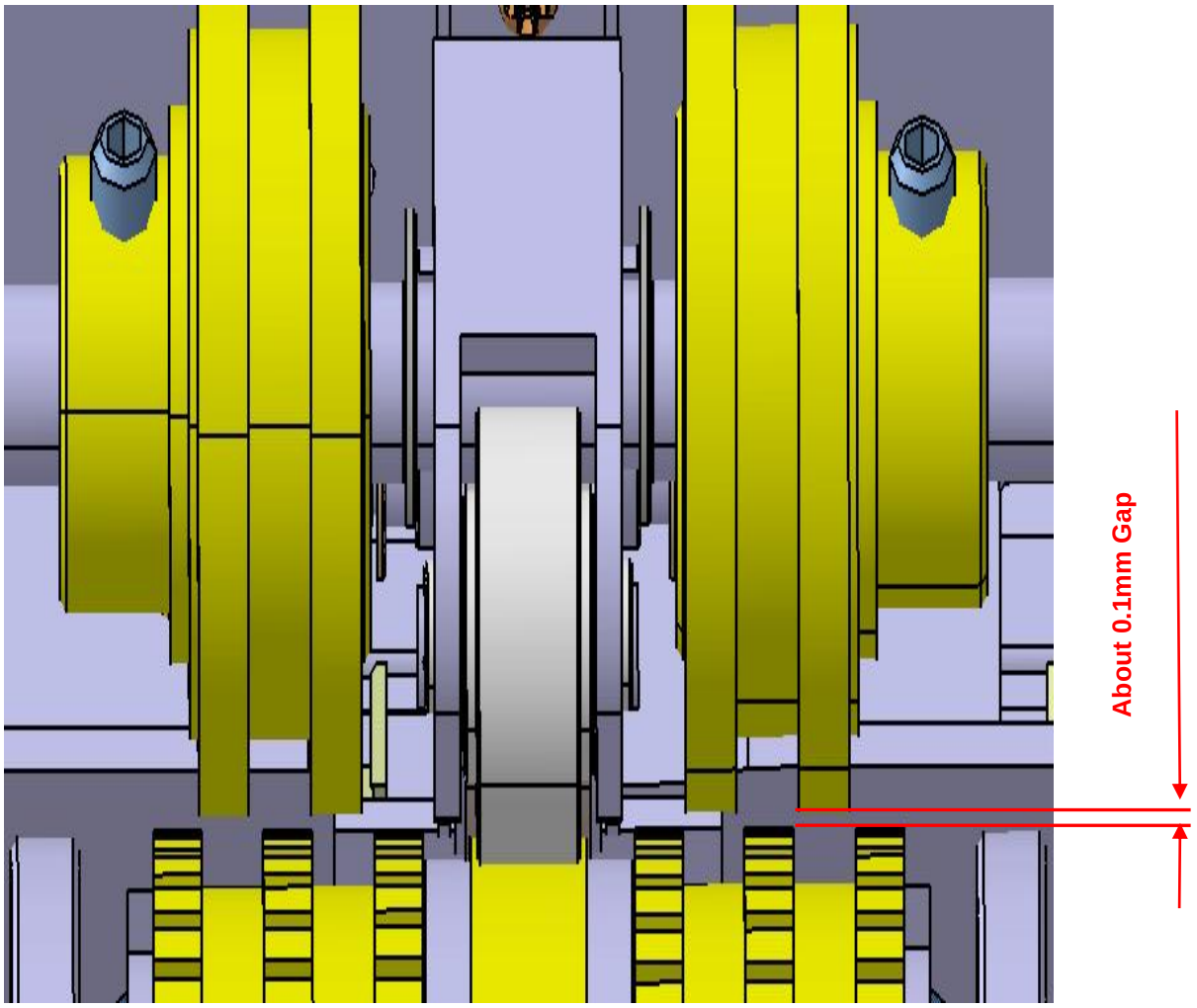

For example, if the note thickness is 0.12mm, the Gap in inserting the note should be 0.1mm.

If the both Gaps of main roller (Bite roller) are not identical when inserting a note, go back to No. 4 in this manual and try again to set up.

12. Even after setting up the Gap of the note input receptacle again, if both sides are tight or loose, adjust the Gap with the Gap adjusting bolt.

+ Direction: Gap will be wide.
- Direction: Gap will be narrow.

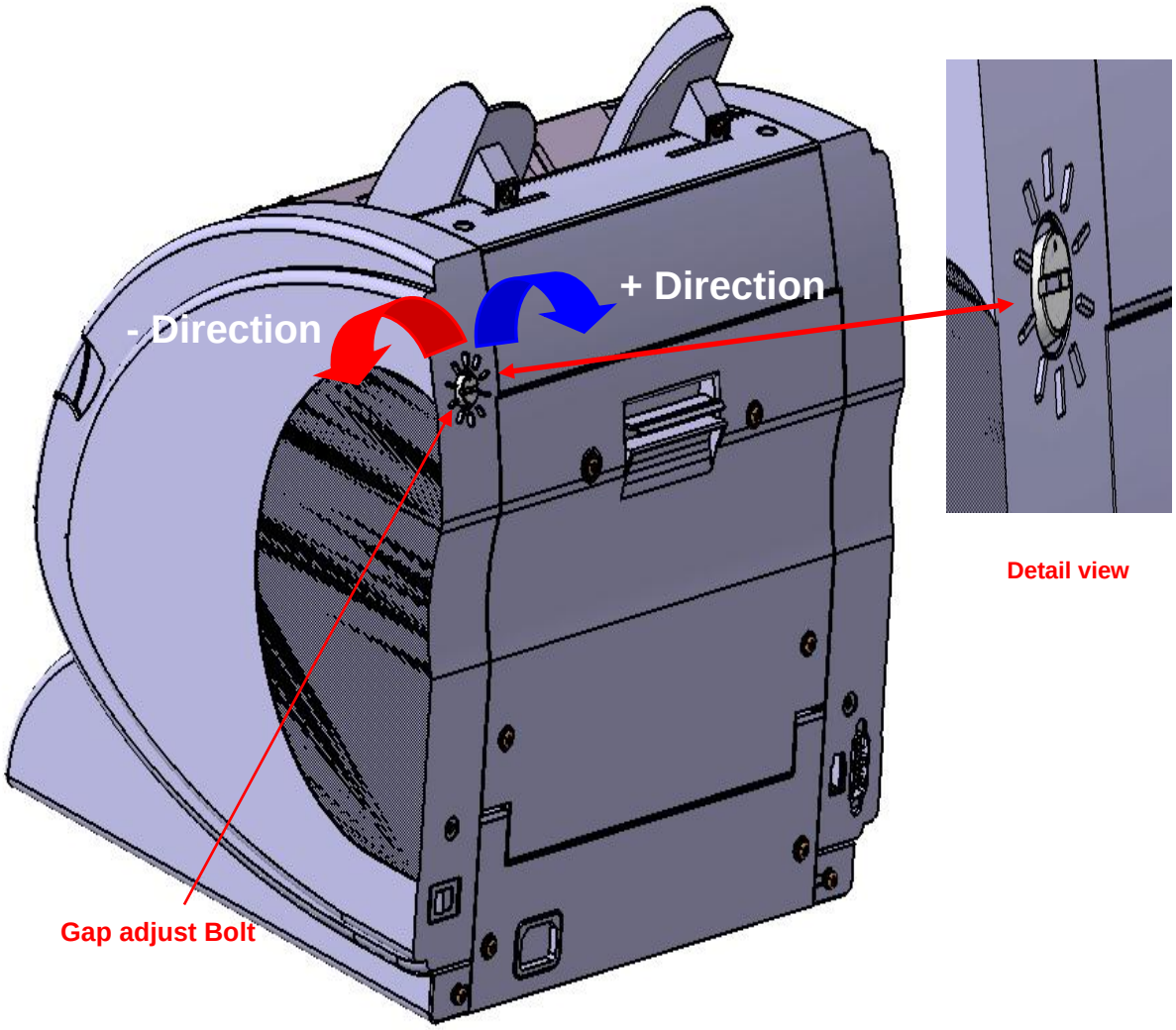

13. After finishing adjusting Gap, assemble Hopper cover and machine by pushing Hopper cover.

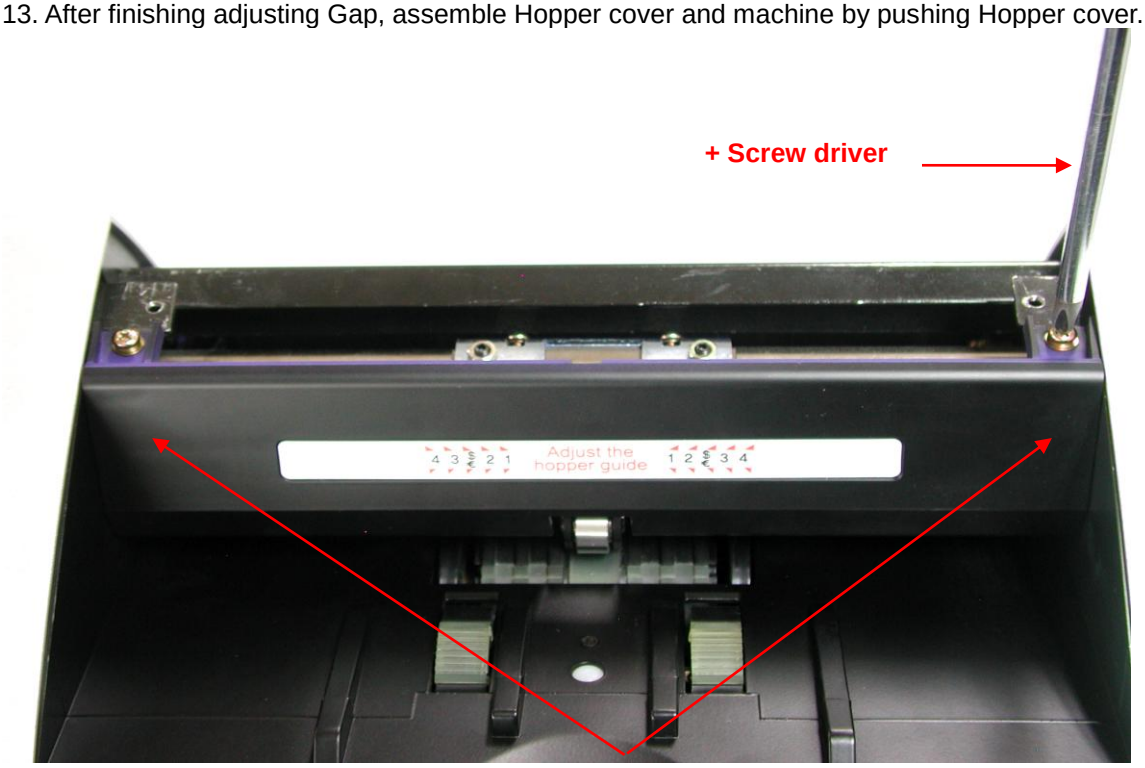

14. Three projections of Hopper Guide Cover sh Push ed into three grooves at the head of Hopper Cover.

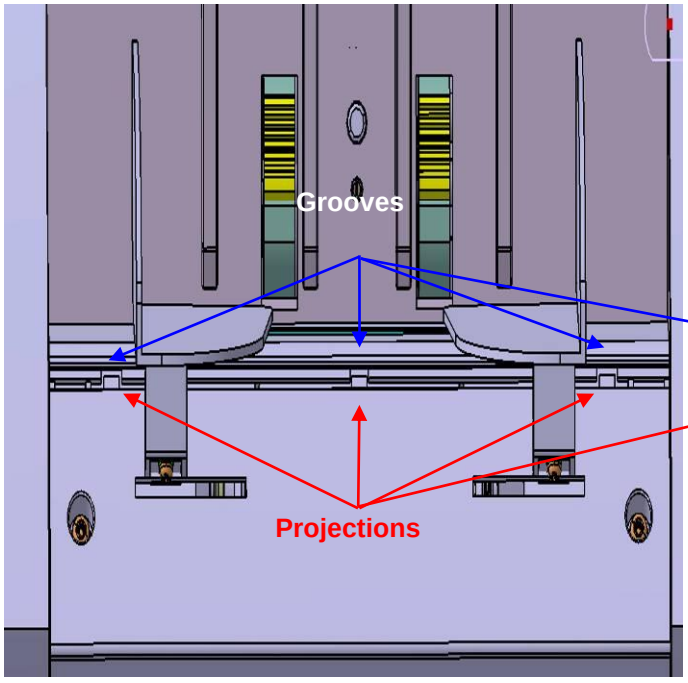

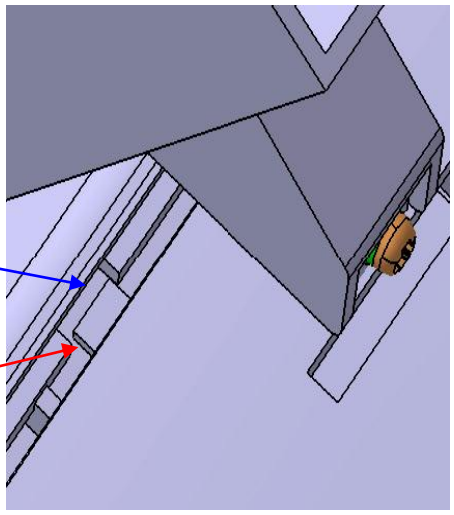

Detail View

9-4. DAILY MAINTENANCE

The machine has a many sensitive sensor to perform high technology functions, for example counterfeit detection, denominations, recognition of serial number and etc.

Users are recommended to clean the machine sensors at least once a day.

Refer to following section and clean the machine regularly.

※ Please turn the power off before clean the machine.

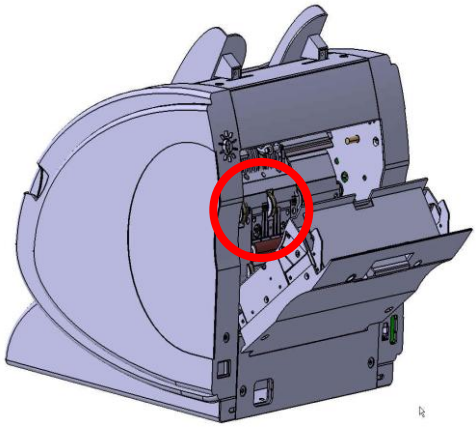

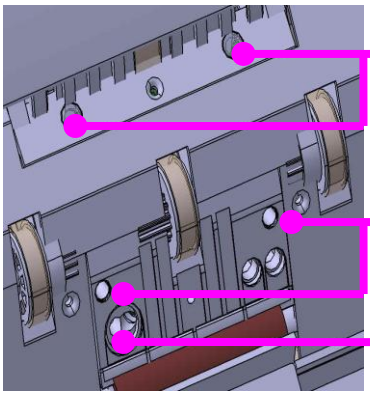

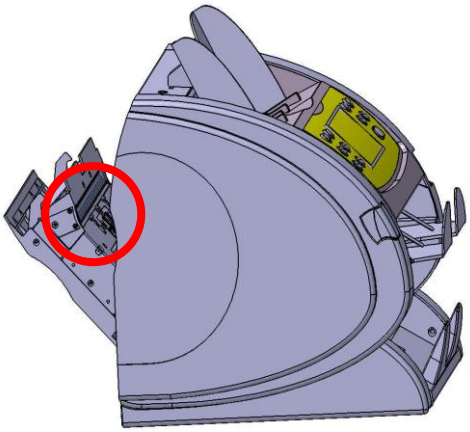

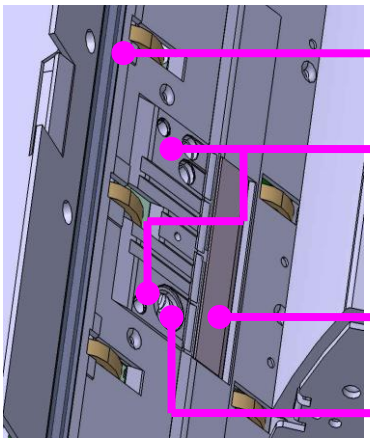

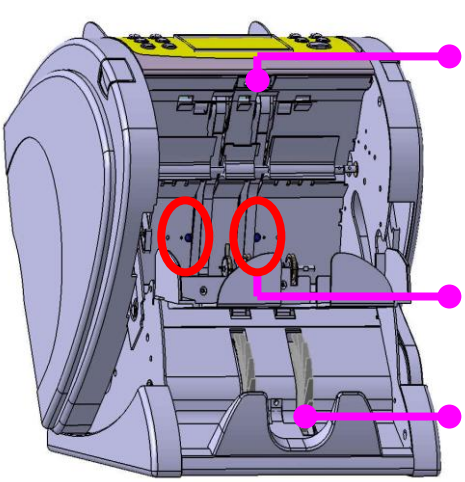

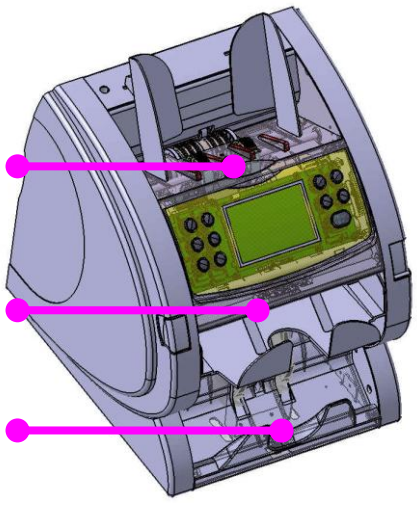

CHAPTER 10. OTHERS

10-1. CF- IR VIEWER

10-1-1. IR Image Viewer

(1) Connect the PC and Magner150 with serial cable.

You can connect the machine with PC by USB-15 pin Serial Cable and 15 pin - 9 pin Serial Cable.

Please find below pictures.

- 15 pin – 9 pin Serial Cable

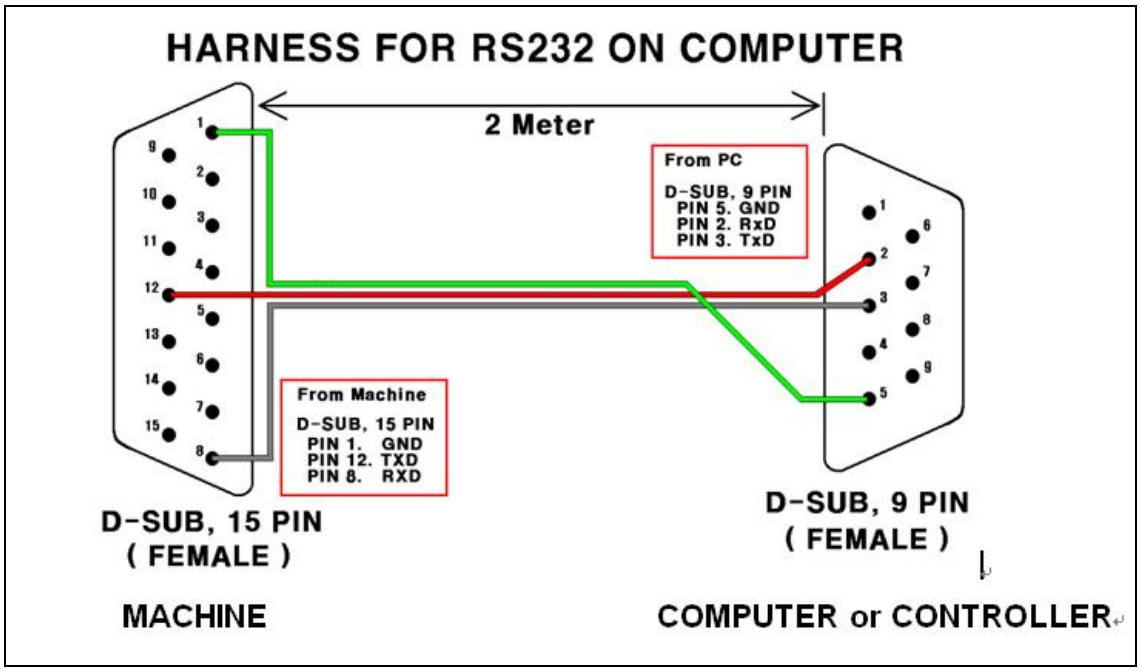

- USB-15 pin Serial Cable

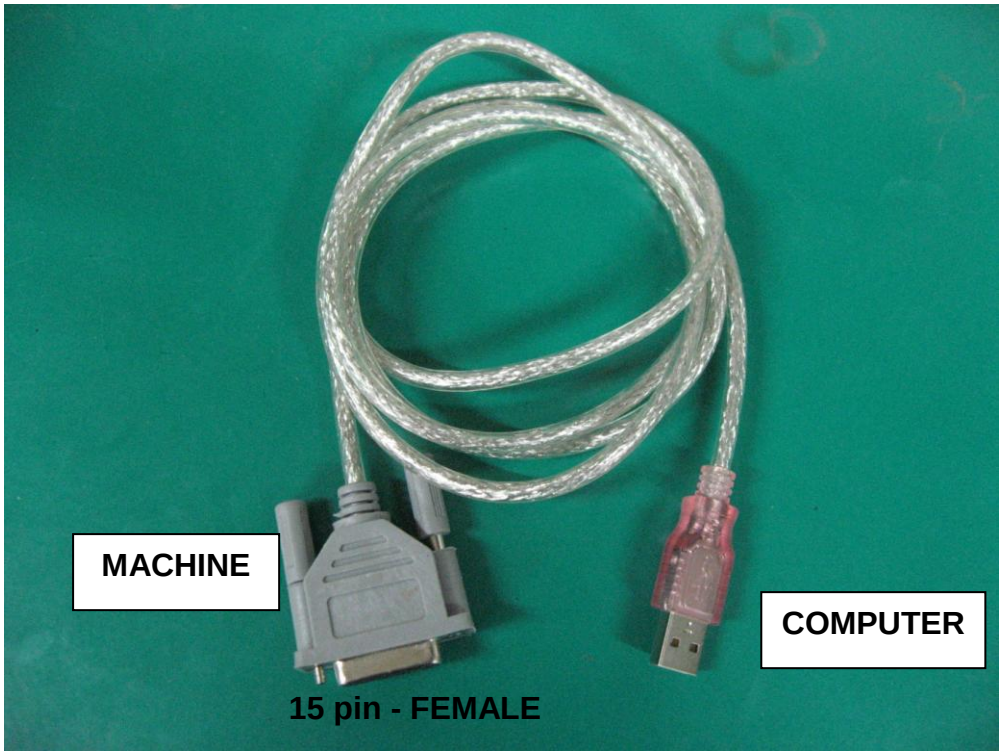

(2) Execute iHUNTER_CF_IR_VIEWER_2.1.1.exe file.

(3) Display shows as below.

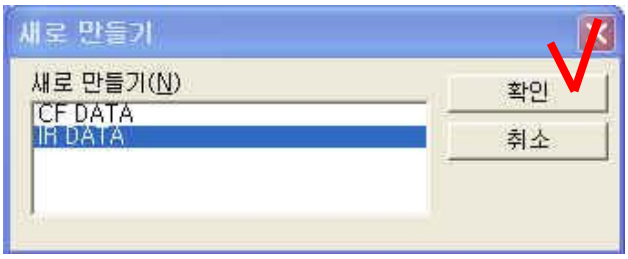

(4) Select IR DATA and click OK.

(5) IR image Viewer appears.

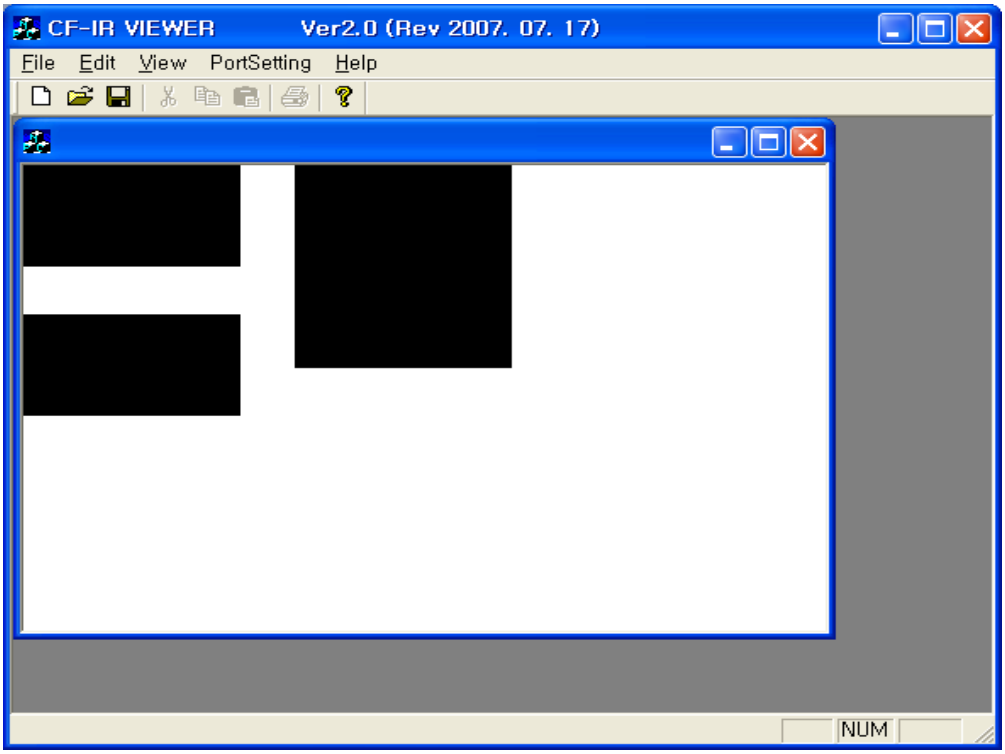

(6) Select **PortSetting** Menu to set serial port and baud rate.

Baud rate is set 115200bps on the factory. (Default)

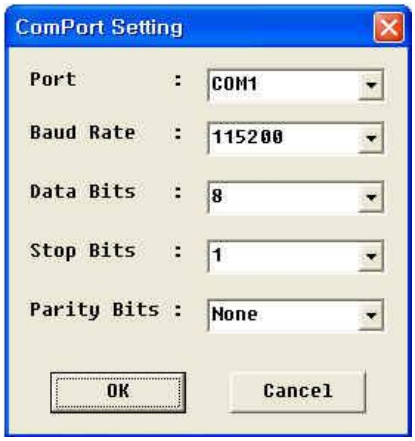

(7) Program setting is completed.

(8) Turn the power on.

(9) The machine show below message on the LCD DISPLAY.

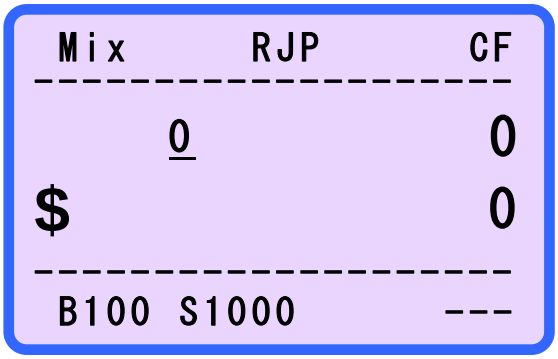

Any Currency Mode is available to calibrate the machine.

(10) Press and hold down the **RESTART** Key. The machine show below message on the LCD DISPLAY.

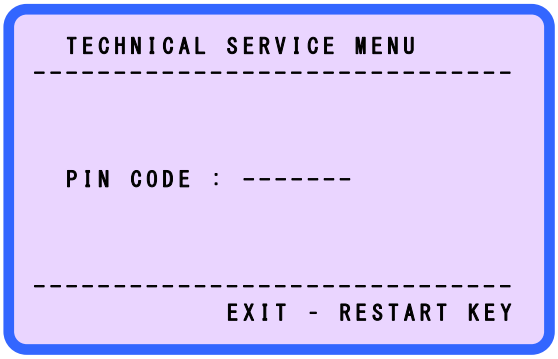

(11) Enter the PIN CODE,

Press and hold down **+10** → **CURRENCY** → Press and hold down **RESTART** → **CF** → **CURRENCY** → **MODE** → **PRINT**".

(12) Display shows as below.

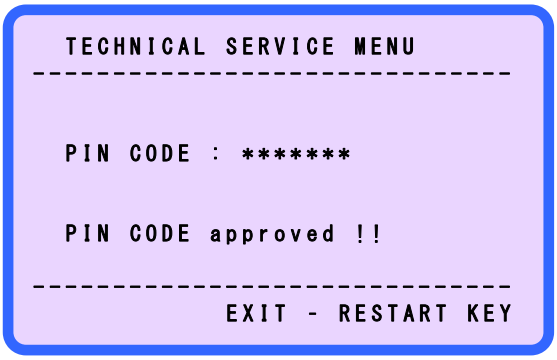

(13) If you want to exit the TECHNICAL SERVICE MENU, press the **RESTART** key.

(14) Press and hold down the **RESTART** Key until the machine show below message on the LCD DISPLAY.

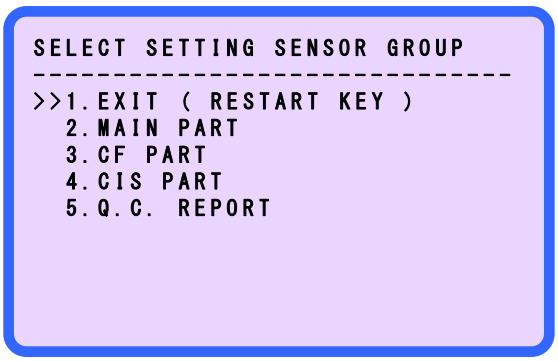

(15) Press the **MODE** Key until the machine show below message on the LCD DISPLAY.

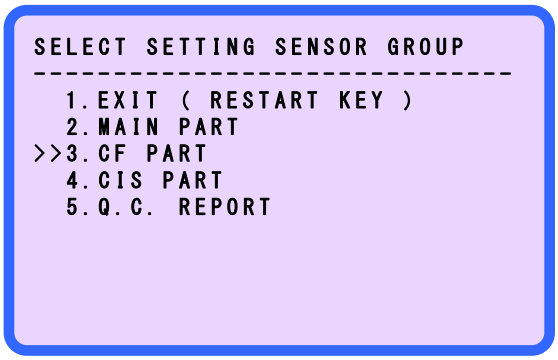

The item No. 3 is selected.

(14) Press the **MODE** key and select the item 3, 3. CF PART.

(15) Press the **PRINT** key and enter the item 3, 3. CF PART.

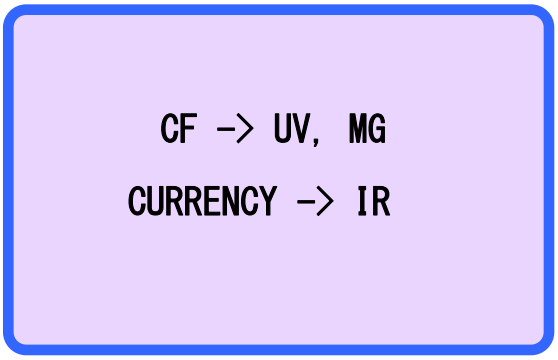

Press the **CURRENCY** key and display shows as below.

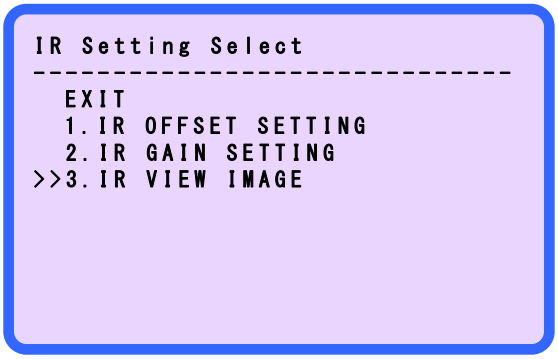

(16) Press the **MODE** key and select the item 3, 3. IR VIEW IMAGE.

(17) Put the test note on the Hopper.

(18) Press the **PRINT** key and the note is inserted automatically.

(19) IR image appears on the screen.

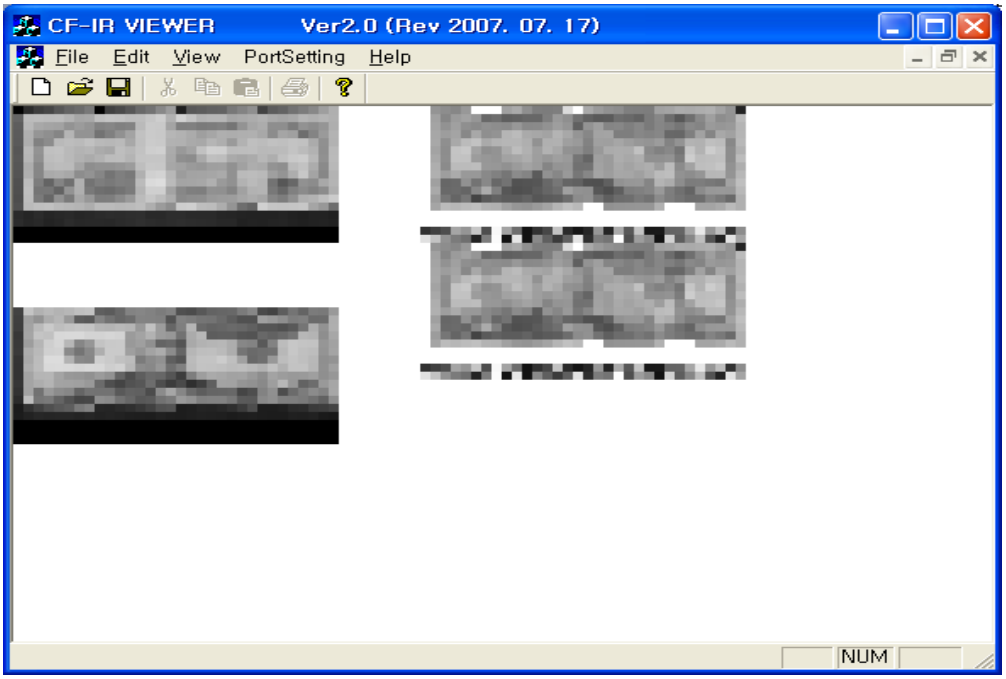

(22)

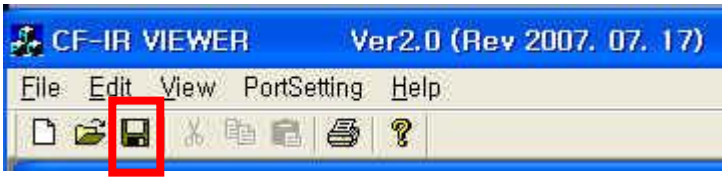

Click the save icon for saving IR data.

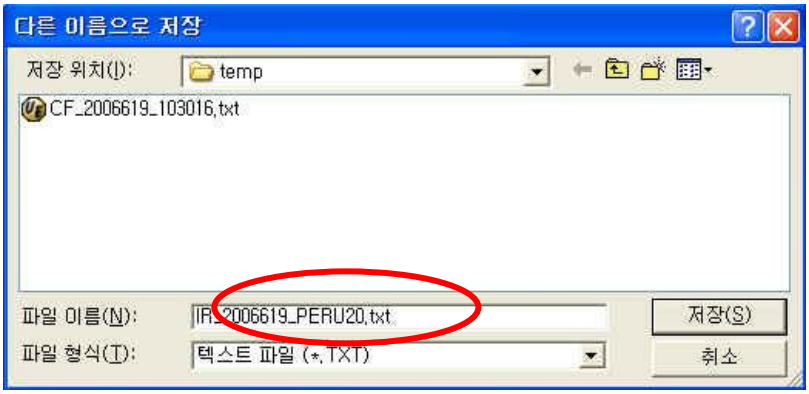

The file format is ***.txt**

After saving, please check the file capacity.

When you save the data, please note the information of inserted test note, for example, currency and denomination and direction.(Ex) IR_R100_**FF** : R100 and **Face Front** direction)

(Face Front direction)

(Face Rear direction)

(Back Front direction)

(Back Rear direction)

Try again item (17) ~ (22) to get the data of the other 3 side of the notes.

10-1-2. CF Data Viewer

(1) Connect the PC and Magner150 with serial cable.

(2) Execute iHUNTER_CF_IR_VIEWER_2.1.1.exe file.

(3) Display shows as below.

(4) Select CF DATA and click OK.

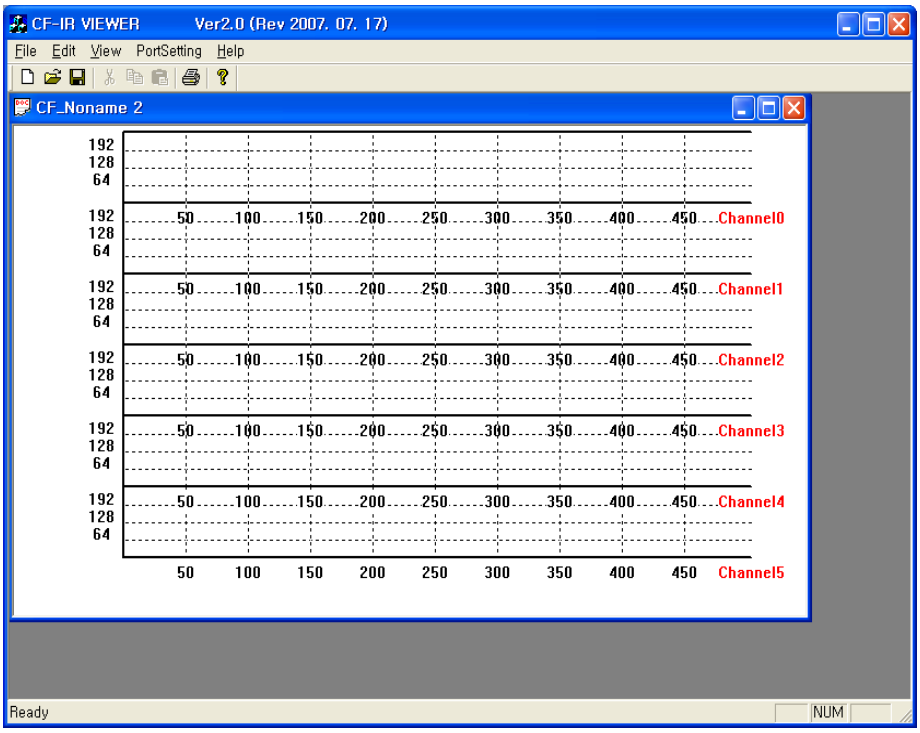

(5) Select **PortSetting** Menu to set serial port and baud rate.

Baud rate is set 115200bps on the factory. (Default)

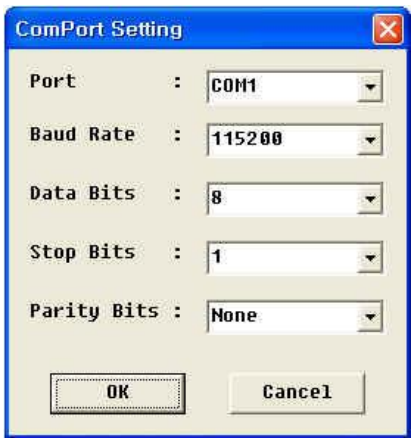

(6) Program setting is completed.

(7) Turn the power on.

(8) The machine show below message on the LCD DISPLAY.

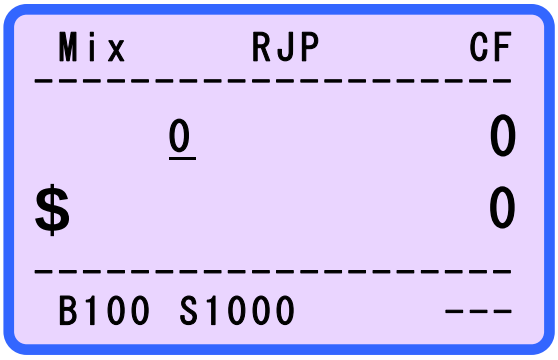

Any Currency Mode is available to calibrate the machine.

(9) Press and hold down the **RESTART** Key. The machine show below message on the LCD DISPLAY.

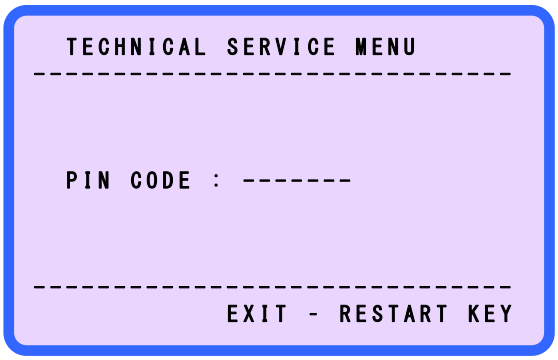

(10) Enter the PIN CODE,

Press and hold down **+10** → **CURRENCY** → Press and hold down **RESTART** → **CF** → **CURRENCY** → **MODE** → **PRINT**".

(11) Display shows as below.

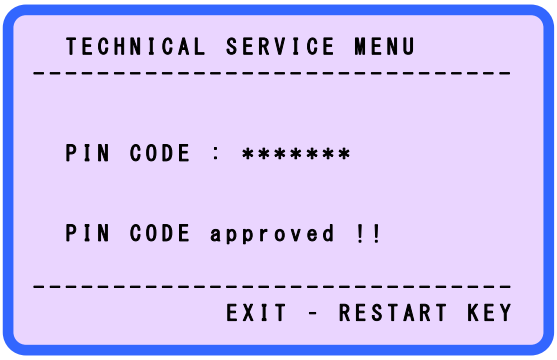

(12) If you want to exit the TECHNICAL SERVICE MENU, press the **RESTART** key.

(13) Press and hold down the **RESTART** Key until the machine show below message on the LCD DISPLAY.

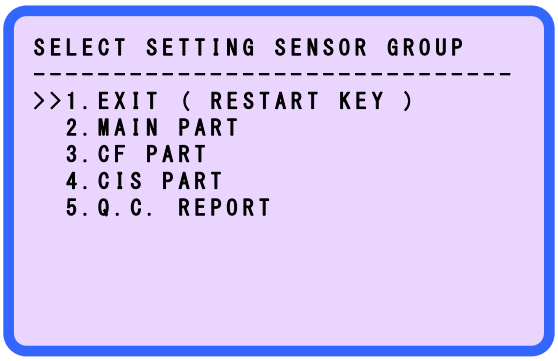

(14) Press the **MODE** Key until the machine show below message on the LCD DISPLAY.

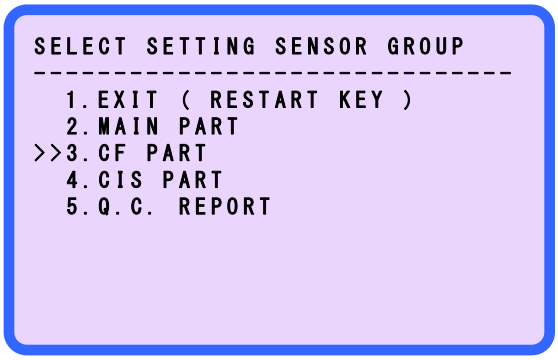

The item No. 3 is selected.

(15) Press the **MODE** key and select the item 3, 3. CF PART.

(16) Press the PRINT key and enter the item 3.3 CF PAER.

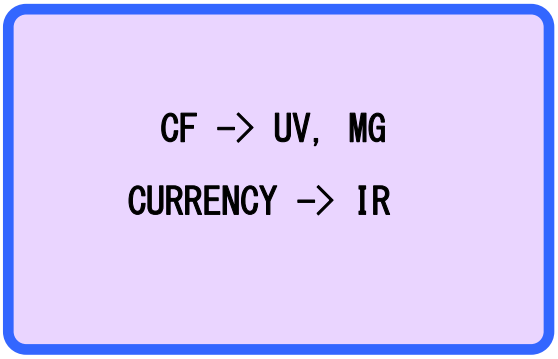

Press the **CF** key and display shows as below.

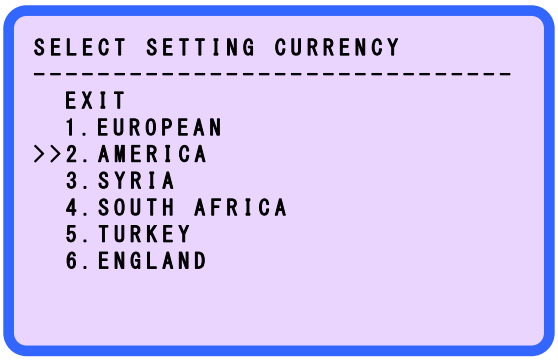

(17) Press the **MODE** key and select the item 2, 2. AMERICA. (The case is USD)

(18) Press the **PRINT** key and enter the item 2, 2. AMERICA.

```
CF GROUP OF AMERICA
----------------------------
>>EXIT
  1.UV MODE
  2.MG MODE
  3.DEFAULT DATA LOAD
  4.SERIAL TRANS
```

(19) Press the **MODE** key and select the item 4, 4. SERIAL TRANS.

(20) Press the **PRINT** key and enter the item 4, 4. SERIAL TRANS.

```
CF GROUP OF AMERICA
----------------------------
  EXIT
>>4-1.TRANS UV DATA
  4-2.TRANS MG DATA
```

(21) Press the **MODE** key and select the item 4-1, TRANS UV DATA.

(22) Put the Counterfeit on HOPPER and press the **PRINT** key.

(23) The machine works automatically and the data will be shown on the PC program.

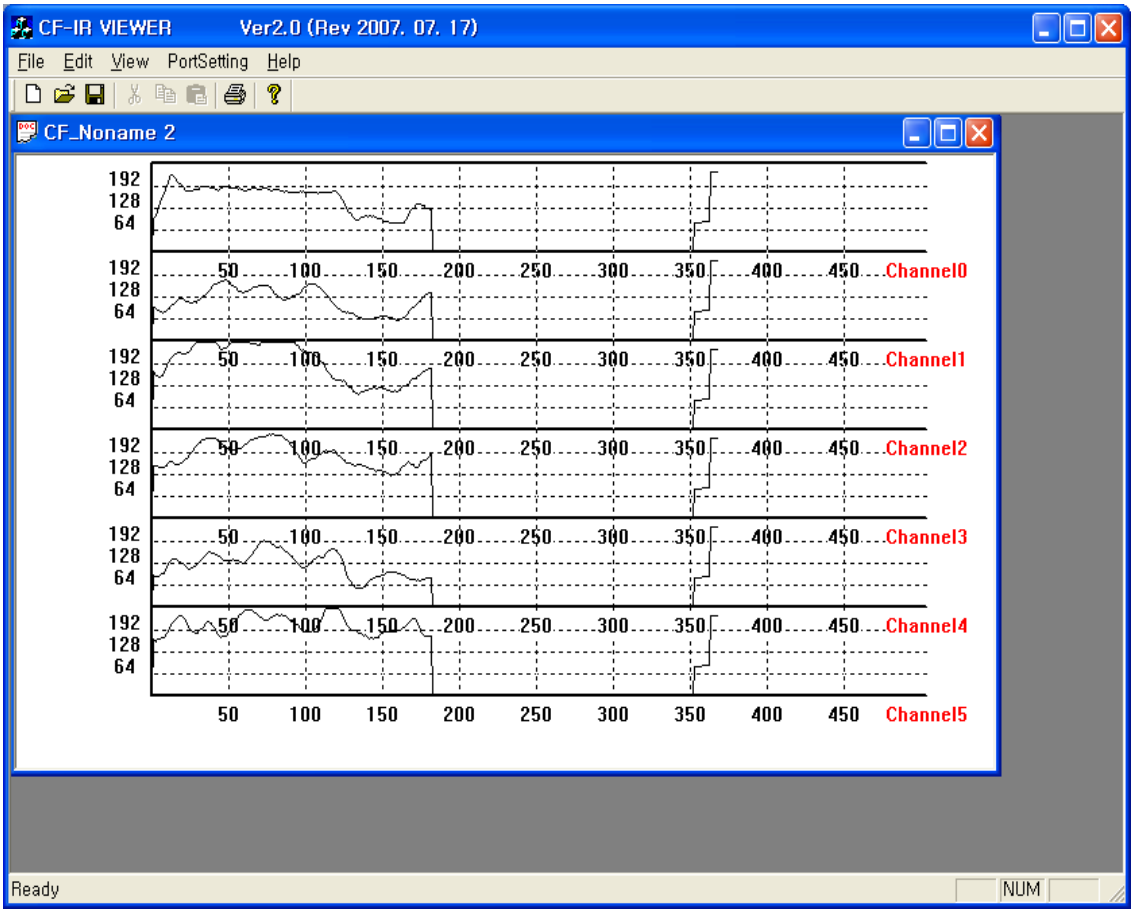

(24) Click the save icon for saving UV data.

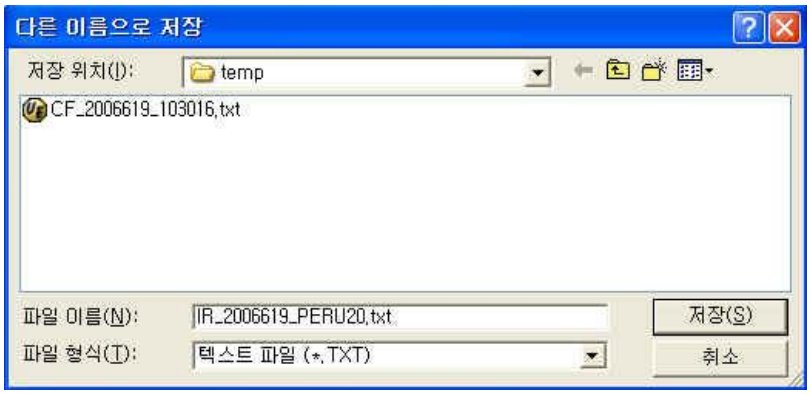

When you save the data, please note the information of inserted test note, for example, currency and denomination and direction.(Ex) UV_R100_**FF** : R100 and **Face Front** direction)

(25) Try again item (22) ~ (24) to get the data of the other 3 side of the notes.

(26) Press the **MODE** key and select the item 4-2, TRANS MG DATA.

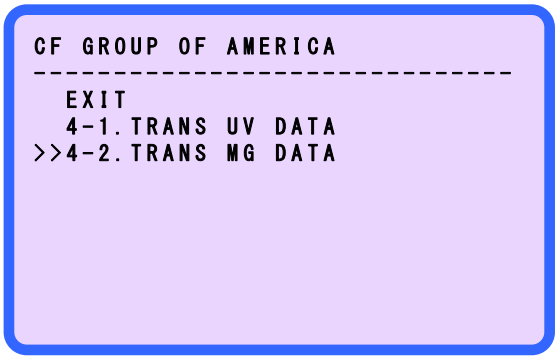

(27) Put the Counterfeit on HOPPER and press the **PRINT** key.

(28) The machine works automatically and the data will be shown on the PC program.

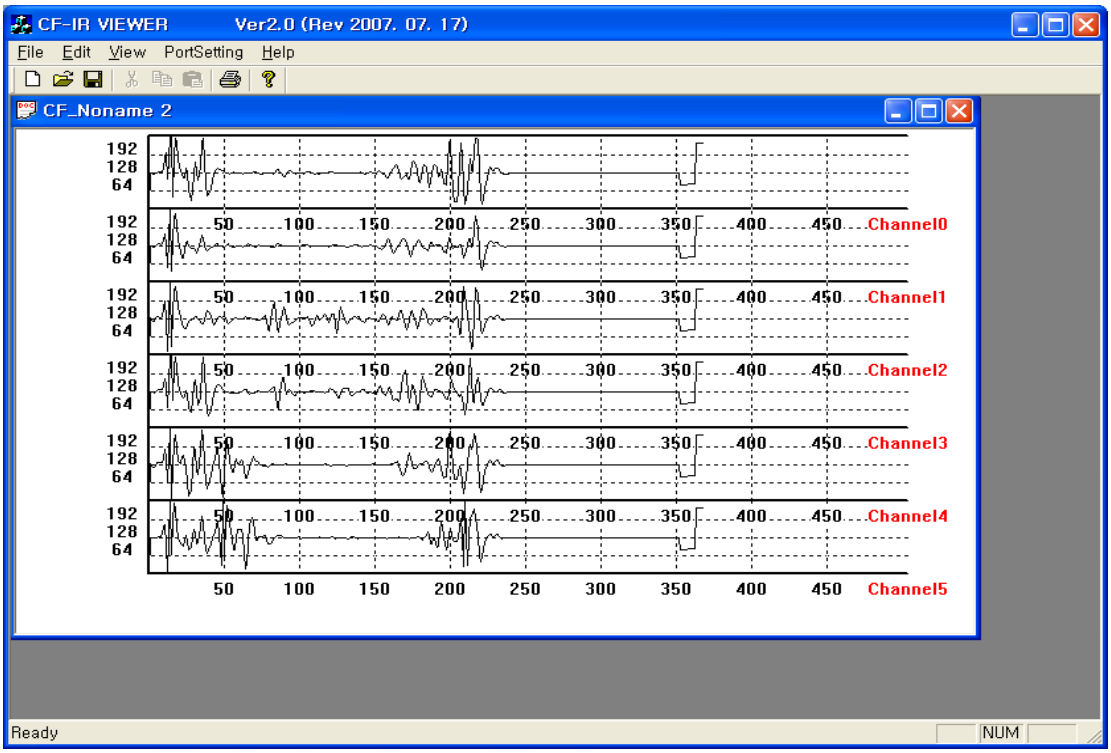

Click the save icon for saving MG data.

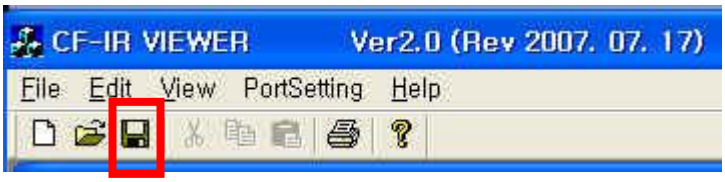

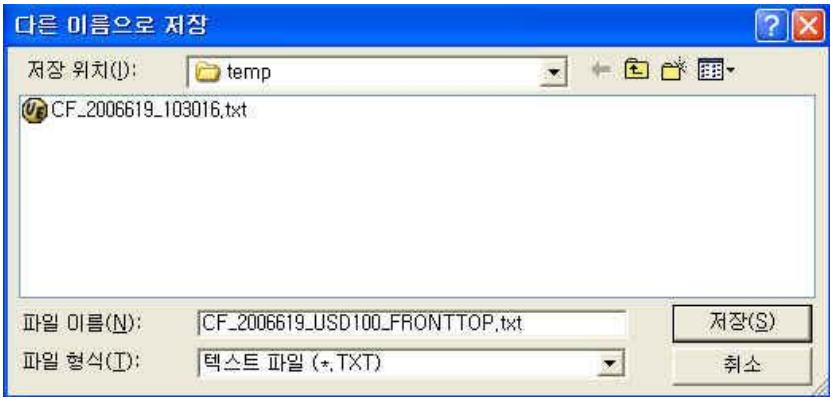

When you save the data, please note the information of inserted test note, for example, currency and denomination and direction. (Ex) MG_R100_**FF** : R100 and **Face Front** direction).

(29) Try again item (22) ~ (24) to get the data of the other 3 side of the notes.

10-2. CIS IMAGE FACTORY

(1) Connect the machine to PC with serial cable (15pin-9pin)

(2) Turn the power on.

(3) The machine show below message on the LCD DISPLAY.

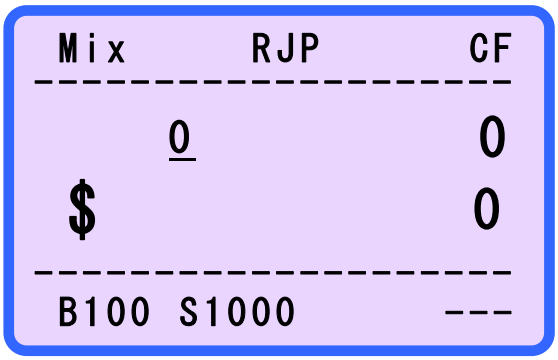

Any Operation Mode is available to calibrate the machine except standard counting Mode.

Select currency to USD.

(4) Press and hold down the **RESTART** Key. The LCD DISPLAY shows as below.

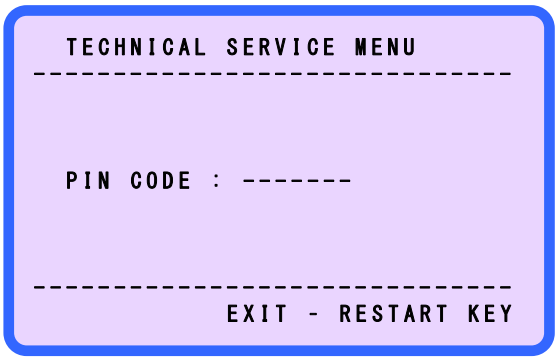

(5) Enter the PIN CODE,

Press and hold down **+10** → **CURRENCY** → Press and hold down **RESTART** → **CF** → **CURRENCY** → **MODE** → **PRINT**".

(6) Display shows as below.

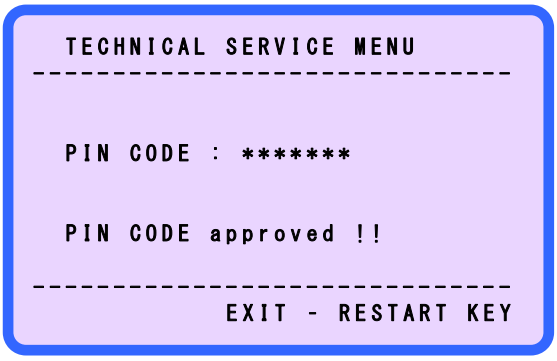

(7) To exit the TECHNICAL SERVICE MENU, press the **RESTART** key.

Press and hold down the **CURRENCY** key and enter CIS TEST MODE.

```
CIS TEST MODE - OK      (1/2)
------------------------------
  1.EXIT (PRESS RESTART KEY)
  2.CIS SOFTWARE VERSION
  3.CIS SETTING MODE
>>4.CIS BOARD STATUS MODE
  5.CIS INFORMATION FLAG* NONE
                          NONE
  6.CURRENCY              EURO
------------------------------
  NEXT           HELP - CF KEY
```

```
CIS TEST MODE - OK      (2/2)
------------------------------
  6.CURRENCY              EURO
  7.NORMAL FULL IMAGE VIEW
  8.SERIAL FULL IMAGE VIEW




------------------------------
  TOP            HELP - CF KEY
```

(8) Select **5. CIS INFORMATION FLAG -> FILE**.

(9) Exit CIS TEST MODE.

(10) Execute CIS Image Factory_U_3.4.2.

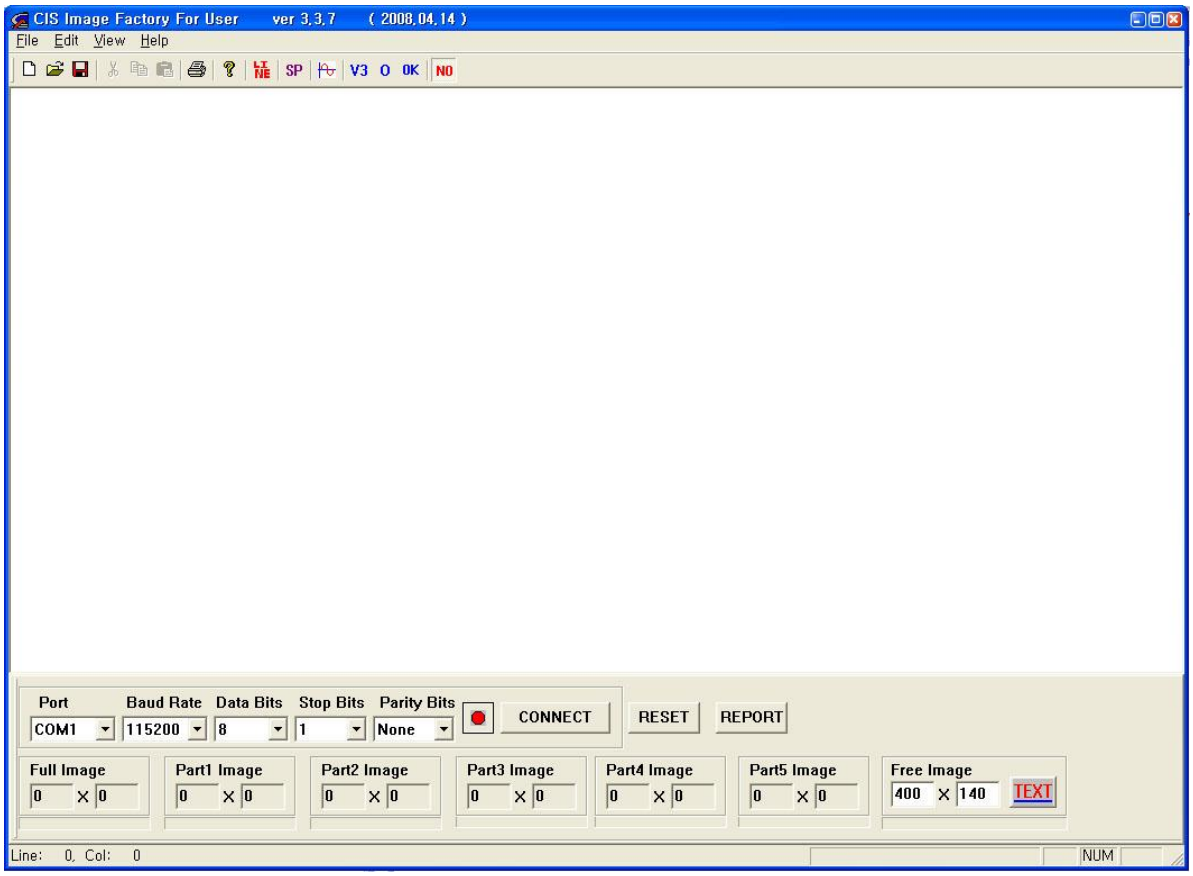

(11) Set COM Port.

After select COM Port which is connected with machine by serial cable, set below parameters.

Baud Rate: 115200

Data Bits: 8

Stop Bits: 1

Parity Bits: None

(12) Click CONNECT button. If machine connects with PC properly, red light turns green.

[Before Connecting]

[After Connecting]

(13) Count Notes.

(14) After counting, the scanned image will be transferred to PC.

(15) Click SAVE button to save image data.

10-3. ACCESSORY

FND type External Display

LCD type External Display

Serial Printer

Divider

USB-Serial Cable

Serial Cable for upgrade and Devider(15P-15P)

Serial Cable between Divider and PC(9P-9P)